BRITAL

ALUMINIUM SYSTEMS DESIGN

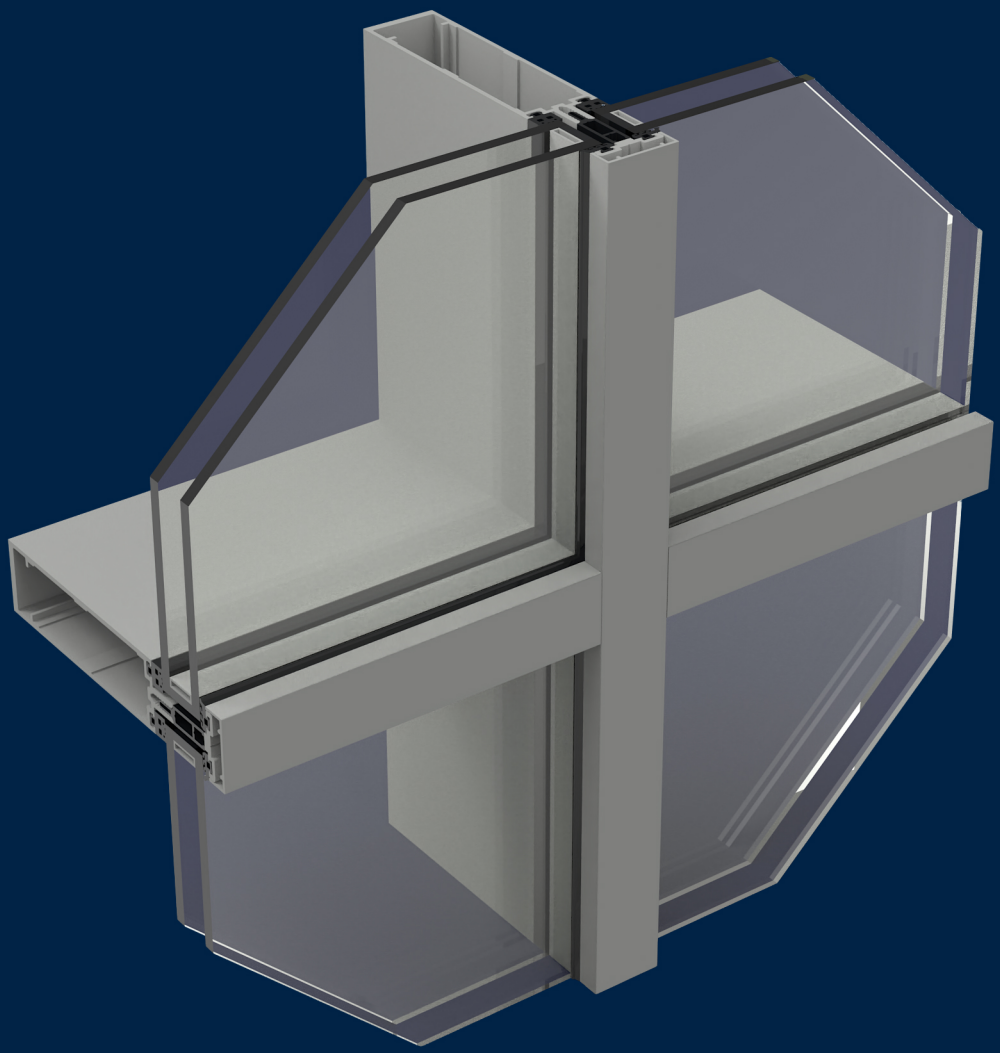

# /CW-56 Curtain Wall

BRITAL.AE

# TABLE OF CONTENTS

Company profile 4
Benefits of choosing BRITAL 5
About System 6

# Innovative facade solutions. Engineered for global performance.

Brital Ltd originated in the United Kingdom and continues to operate with a strong British foundation. While our design legacy began with a focus on the Gulf region, BRITAL is not solely Middle East-based — our presence extends internationally, with operations designed to support projects across a variety of markets.

From the outset, now BRITAL Middle EAST Aluminium Systems, were developed to meet the specific climatic and construction requirements of the Gulf region. However, our flexible design approach allows for adaptation to global performance standards, ensuring that our façade systems can be tailored to meet regional codes and project-specific needs worldwide.

Over the past twenty-fifive years, BRITAL has significantly expanded its product range — offering complete façade solutions, from louvers, doors and windows to stick glazed. and unitized curtain wall systems. Most of our systems are available in both thermal and non-thermal break.

System innovation remains a key part of our identity. We collaborate closely with a network of approved fabricators to ensure our solutions remain practical, efficient, and responsive to the needs of the markets we serve.

BRITAL systems are exclusively manufactured through licensed regional extruders who meet our strict standards for quality, precision, and consistency. Accessories and gaskets are specified as part of each system and are readily available within the region.

All major BRITAL systems are developed in accordance with CWCT standards and have been independently tested to ensure compliance with BS:EN, ASTM, AAMA, and other globally recognized benchmarks.

While BRITAL originated in the UK, our operations today are regionally focused, with a strong presence in Dubai to support projects with technical guidance, drawing reviews, and façade system consultation across the Middle East and other markets.

BRITAL
ALUMINIUM SYSTEMS DESIGN

# Where smart systems meet seamless execution

### REGIONAL SOLUTIONS

Our systems are meticulously designed from the ground up to meet the unique climates and conditions of the region, with a global focus ensuring their effectiveness in diverse environments worldwide.

### ENERGY-EFFICIENT SOLUTIONS

Advanced thermal breaks and insulation options optimize energy efficiency, reducing costs and enhancing sustainability.

### WEATHER-RESISTANT DURABILITY

Built to endure—our systems resist corrosion and withstand even the harshest weather conditions for long-lasting performance.

### STEAMLINED-INSTALLATION AND CUSTOMIZATION

Efficient installation with personalized solutions—tailored to meet your project's unique needs.

### COST EFFICIENCY

Smart investments in our durable, low-maintenance, and energy-efficient systems lead to long-term savings and reduced operational costs.

### EXPERTISE ON DEMAND

From design consultation to post-sales support, our specialists are with you every step of the way to ensure smooth and successful project delivery.

### BUILT WITH INNOVATION

Engineered for performance, our advanced aluminum systems boost efficiency across construction and industrial applications.

### QUALITY WITHOUT COMPROMISE

We meet and exceed global standards to deliver reliable, high-performance systems you can trust.

### CONFIDENCE, GUARANTEED

Backed by a 10-year system warranty and 5-year accessory coverage, our commitment to quality gives you peace of mind.

### BEYOND THE BENCHMARK

Engineered to **CWCT** standards, our systems surpass **ASTM**, **AAMA**, and **BS:EN** requirements for superior

# Introduction

All BRITAL systems are designed to be interchangeable with each other, this is particularly so with the CW-56 curtain walling systems, which can incorporate both capped and uncapped mullions or transoms within the same area of curtain walling, giving the designer maximum flexibility to create almost limitless options.

The CW-56 system has a number of 'frameless' thermally broken and non thermally broken top hung opening vents that can be incorporated into the curtain walling elevation. In addition any of the BRITAL Framed windows and doors can be incorporated into the curtain walling.

The structural support for the curtain walling is provided by a common set of mullions with depths ranging from 43mm to 200mm allowing the selection of the most economic depth for any particular span. Transoms are available to match each of the mullion depths. In addition to the standard mullions a wide range of other specialized mullions are available: such as the half mullion for jamb conditions and various corner mullions.

The CW-56 system currently allows for glazing units from 28mm thick to 40mm thick (24mm thick units may be used in fully capped systems)
In addition a wide range of single glazed options are available for use with the fully capped system.

All fixed insulated glass units must be dual sealed with a PIB primary seal and a secondary seal. For uncapped details the secondary seal must be a structural grade silicone IG sealant.

# Technical Specifications & Materials

## 1. Structural Bond

Since the structural bond between the glass and the aluminium vent section is of critical importance, BRITAL insist that the glazing is bonded into the vent frame under factory controlled conditions by a company that have met the stringent requirements of the silicone sealant manufacturer. This also applies to other details where there is a structural bond between an aluminium frame and glazing or panels.

## 2. Materials

Aluminum profiles are extruded by BRITAL's approved suppliers, from aluminium alloy 6063 T6 extruded to comply with the requirements of :

- BS EN 12020-2; 2008 &
- BS EN 755-9;2008

(Some components are extruded in alloy 6082 T6 to provide added strength.

Extruded rubber gaskets and glazing setting blocks are manufactured from EPDM by BRITAL's approved suppliers.

Hardware for the opening windows and doors are supplied by BRITAL's approved suppliers, and should be used in accordance with the recommendations in this manual and those of the approved supplier.

Curtain walling thermal breaks are manufactured from extruded PVCu or EPDM to suit the various glazing options shown in this manual.
Thermal breaks for use in window and door systems are manufactured from glass reinforced polyamide sections.

## 3. Section Weights

The section weights shown in this manual are estimated values, the exact weight for a particular extrusion may vary and should be verified with the extruded at the time of ordering.

# Finishes & Glazing

## 1. Finishes

The extruded aluminium sections can be finished in a wide range of readily available finishes that can be applied by the extruder, among the finishes available are:

- Anodized to BS 1615 or BS 3987 (natural or coloured)
- Polyester powder coat to BS EN 12206-1, where PPC has a structural seal bonded to it the adhesion of the finish to the metal has to be checked as does the curing of the finish.
- PVDF to AAMA 2605
- BRITAL can advise if other finshes are being considered.

## 2. Glazing

Insulated glazing units are site glazed, where they are uncapped they must have pre- prepared channels in the edge to accept concealed lug fixings. Where the glazing is retained by pressure plates and caps standard edges are sufficient to the units. Where glazing is used in spandrel area it must be either heat strengthened or fully tempered to avoid the risk of thermal fracture.

Where panes or panels exceed 3.0m x 1.5m, or 150kg BRITAL's approval should be sought.

# Fabrication & Installation

## 1. Manufacture

The manufacture of the components for the curtain walling grid is very simple with most components being square cut lengths of extrusion, with drainage slots and fixing holes added.

Opening vents are manufactured from mitre cut extrusions that are jointed and sealed at the corners with extruded corner cleats.

## 2. Installation

The installation of the curtain walling is designed to be quick and simple, this is aided by a variety of extruded brackets that are available with the system. Once the grid work is installed onto the building, the infill glazing and panels can be installed along with any opening vents or doors. Once glazing is positioned in the curtain walling grid the glass is retained either with fixing lugs or pressure plates. Fixing lugs should be positioned 100mm from each end and then at maximum 400mm centres. Pressure plate screws should be fixed at 50mm from each end and then at maximum 300mm centres. using stainless steel pan headed screws. All screws must be tightened to a torque of 5.5Nm. The glazing is then completed by the application of a clip on cap or in the case of the uncapped glazing a silicone weather seal, applied on to a polyethylene backer rod.

## 3. Opening Vents

The opening vents must be hung on the correct Master hinge as detailed below, using the correct screw fixings as detailed in this manual.
Where vents are at 1st floor and above the maximum opening should be limited to 100mm this is done by the provision of two restrictor arms to the lower part of the window jamb.

# Fabrication & Installation
# ***Structural Glazing***

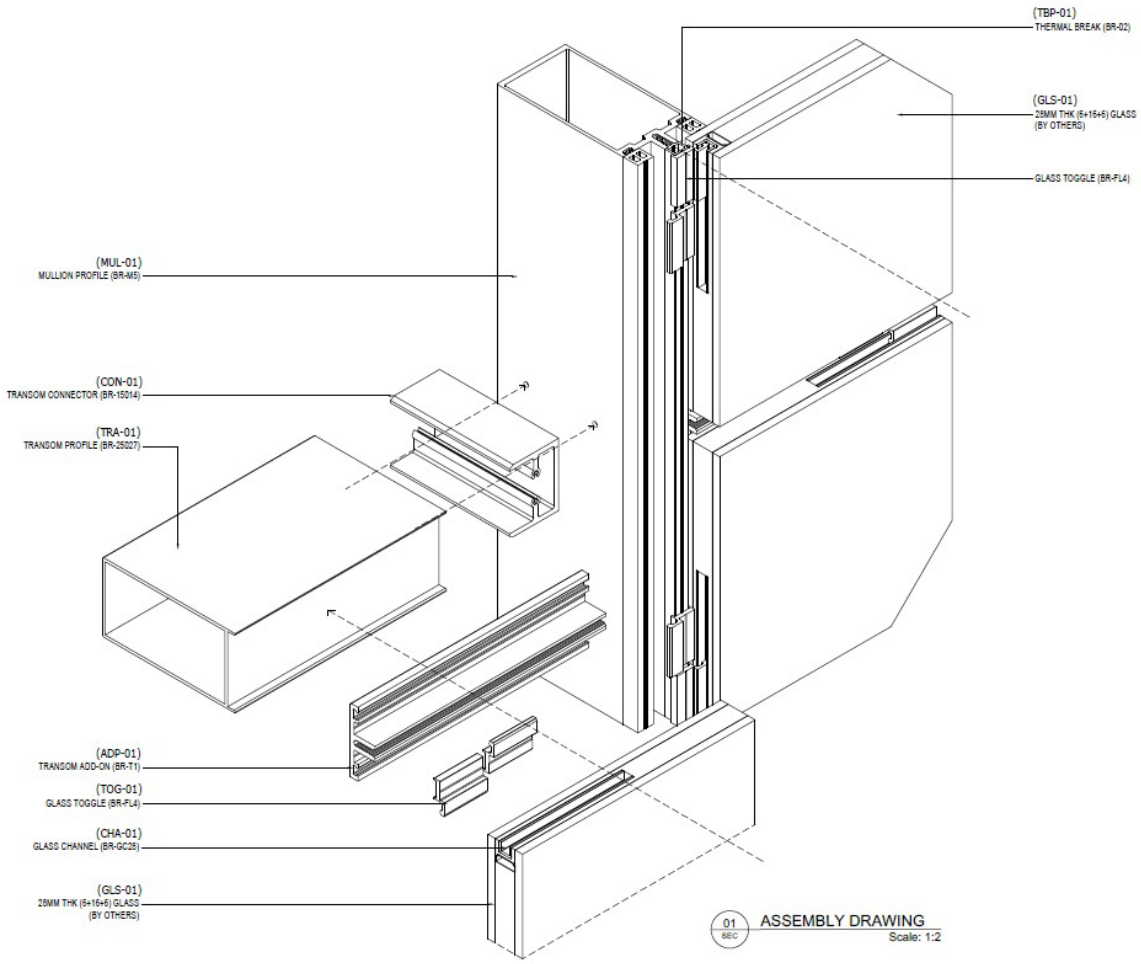

# Fabrication & Installation
# ***Fully capped***

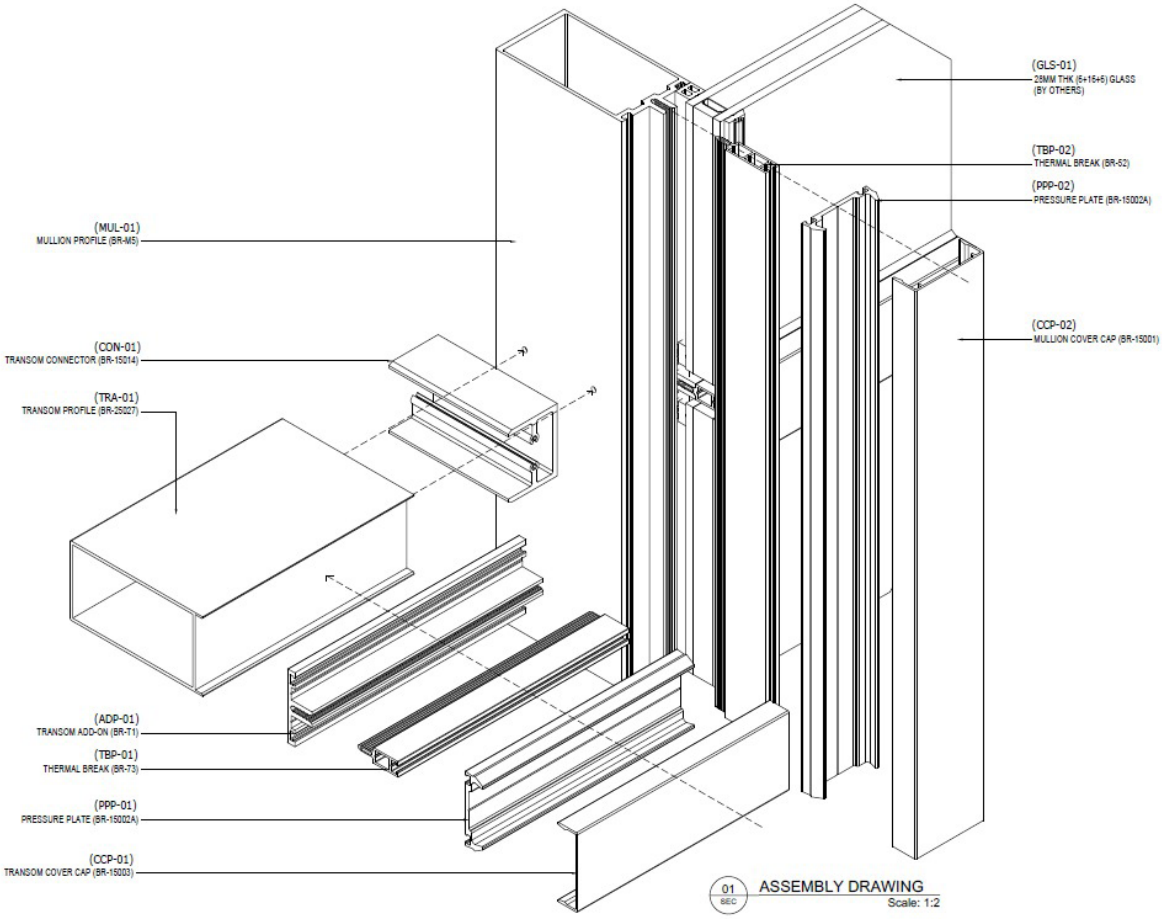

# Performance & Technical Requirements

## 1. Performance

The BRITAL CW-56 curtain walling system has been used successfully for many years on many projects throughout the Middle East, Africa, Asia, Australia etc. this combined with extensive testing of the system has shown that the curtain walling can conform to the requirements of a wide range of European and US test standards, for water penetration, air infiltration and wind resistance. Details of previous test results are available on a project specific basis.

The BRITAL curtain walling (including the frameless opening vent) has been tested to 1000Pa for water penetration under both Static and Dynamic load conditions (ASTM 331-00 & AAMA 501.1-05)

## 2. Design

The BRITAL CW-56 curtain walling can be designed to resist the wind loading requirement, using either European or US standards as well as the requirements of local national codes. Spreadsheets are available from BRITAL to aid with the initial assessment of wind loads and mullion sizes. (final project calculations should be prepared by a structural engineer). Mullions may be designed as single spans or multiple spans where there is a need to achieve greater efficiency in the design.

## 3. Insulated Glazing Units (IGUs)

In order to achieve the designed weather resistance insulated glazing units should be designed to the following tolerances;
Thickness: Units up to 34mm thick ±1.0mm , over 34mm thick ±1.5mm
Height / Width ± 1.0mm

All visible glass edges should have a 1.0mm x 1.0mm arrissed edge.

## 4. Reglazing

In order to reglaze a damaged pane or panel the caps or silicone weather should be removed to expose the screw fixings of the pressure plate or fixing lug. The

# Performance & Technical Requirements

pressure plates or lugs are are then removed to allow the damaged pane or panel to be removed, the process is then reversed to install the new pane or panel.
Where structurally glazed vents have to have the glazing replaced the moving frame must be returned to the factory for reglazing under controlled factory conditions.

## 5. Fire Breaks

Fire breaks must be installed at floor levels and vertically between fire compartments in accordance with local fire regulations.

In situations where bottom hung open out shutters are required to comply with the UAE code 2.17.3. Brital can provide a bottom hung open out window, See section 44 of this manual for full details.

## Maximum Sizes Limits.(top hung opening)

| Hinge Referance | Hinge Length (mm) | Opening Angle | Maximum Height (mm) | Maximum Width (mm) | Maximum Weight (kg) |
|---|---|---|---|---|---|
| BR-1206.10 | 260.5 | 35 (45) | 450/600 | 1200 | 50 (36) |
| BR-1206.12 | 311.0 | 30 (40)6 | 01/800 | 1200 | 70 (43) |
| BR-1206.14 | 349.53 | 0 (40)8 | 01/1000 | 1200 | 80 (50) |
| BR-1206.16 | 410.5 | 25 (35) | 1001/1200 | 1200 | 95 (65) |
| BR-1206.18 | 458.5 | 25 (35) | 1201/1400 | 1500 | 108 (78) |
| BR-1206.20 | 509.52 | 0 (30) | 1401/1600 | 1600 | 115 (90) |
| BR-1206.22 | 555.52 | 0 (30) | 1601/1800 | 1600 | 120 (100) |
| BR-1206.24 | 599.52 | 0 (25) | 1601/1800 | 1600 | 130 (120) |
| BR-1206.28 | 713.0 | 10 (20) | 1801/2000 | 1600 | 145 (140) |
| BR-1206.28 | 713.0 | 10 2 | 001/2500* | 1200 | 120 |

Note:

- The opening angle may be increased to the value shown in the brackets provided that the maximum weight is reduced to the value in brackets in the maximum weight column.
- For windows over 2000mm high, window MUST be restricted using the design limiter arm in conjunction with the BR08-16-02 shutter frame and the BR1252-19 striker.

*Only specified Master hinges to be used.*

## Section 10 - Mullion Sections & Sleeves

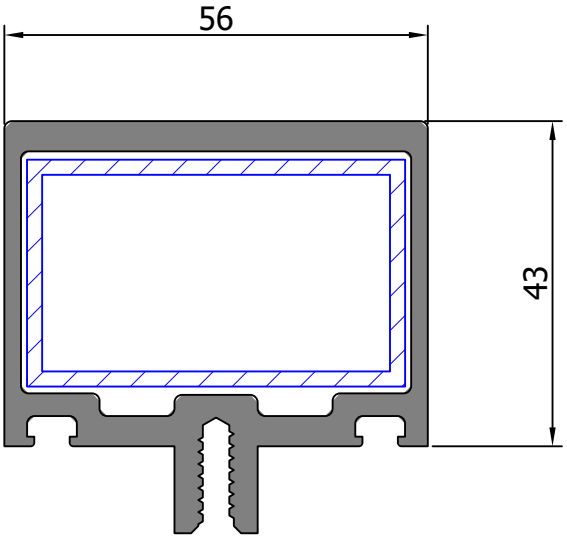


### 43mm Mullion

| | |
|---|---|
| SECTION | BR-M7 |
| AREA (sqmm) | 717.1 |
| WEIGHT (kg/m) | 1.936 |
| O/S PERIM (mm) | 278.4 |
| Ixx ($cm^4$) | 23.9 |

### 30mm Sleeve

| | |
|---|---|
| SECTION | R-JS1 |
| AREA (sqmm) | 304 |
| WEIGHT (kg/m) | 0.821 |
| O/S PERIM (mm) | 160 |
| Ixx ($cm^4$) | 4.5 |

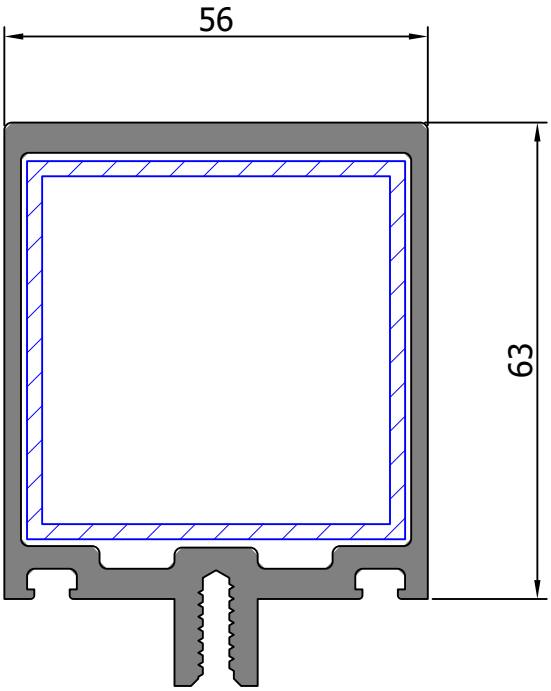


### 63mm Mullion

| | |
|---|---|
| SECTION | BR-M6 |
| AREA (sqmm) | 805.1 |
| WEIGHT (kg/m) | 2.174 |
| O/S PERIM (mm) | 318.37 |
| Ixx ($cm^4$) | 55.8 |

### 50mm Sleeve

| | |
|---|---|
| SECTION | BR-20593 |
| AREA (sqmm) | 384 |
| WEIGHT (kg/m) | 1.037 |
| O/S PERIM (mm) | 200 |
| Ixx ($cm^4$) | 14.7 |

## Section 10 - Mullion Sections & Sleeves

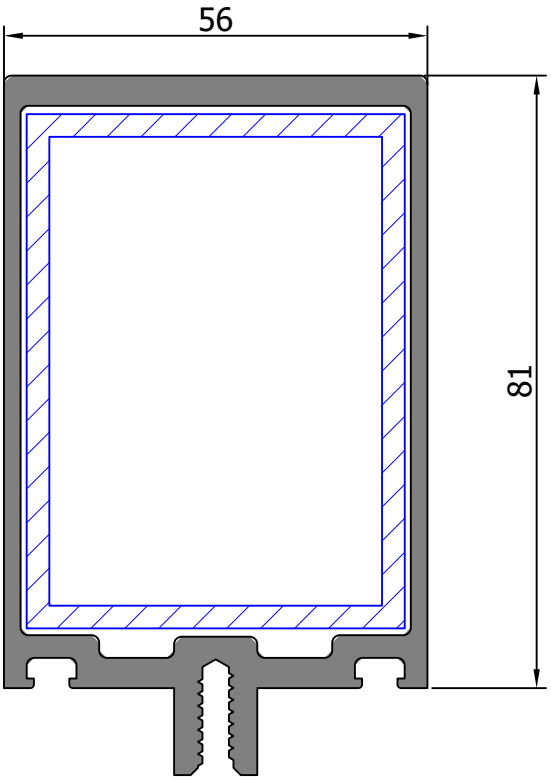


### 81mm Mullion

| | |
|---|---|
| SECTIONB | R-M181 |
| AREA (sqmm) | 884.3 |
| WEIGHT (kg/m) | 2.387 |
| O/S PERIM (mm) | 354.37 |
| Ixx ($cm^4$) | 98.1 |

### 68mm Sleeve

| | |
|---|---|
| SECTIONB | R-JS1 |
| AREA (sqmm) | 672 |
| WEIGHT (kg/m) | 1.814 |
| O/S PERIM (mm) | 236 |
| Ixx ($cm^4$) | 43.6 |

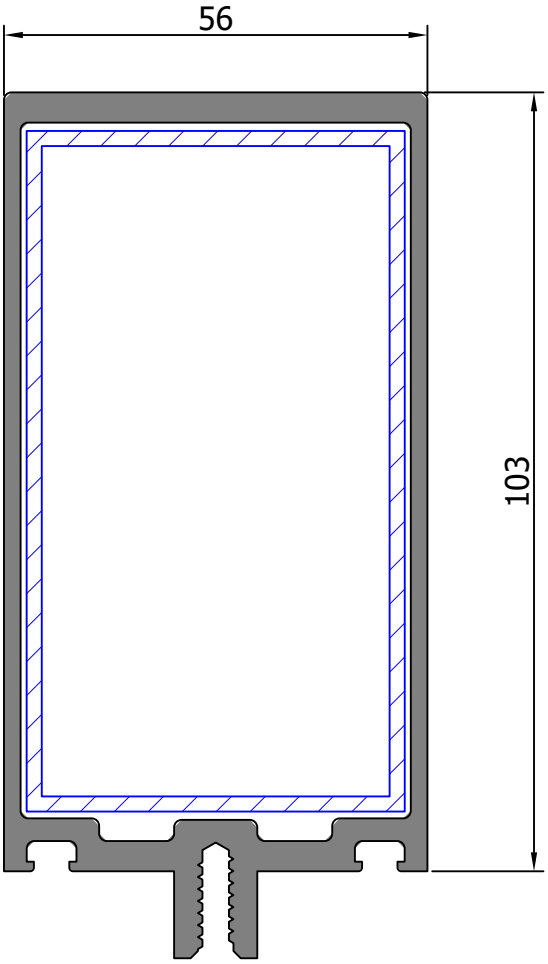


### 103mm Mullion

| | |
|---|---|
| SECTIONB | R-M5 |
| AREA (sqmm) | 981.1 |
| WEIGHT (kg/m) | 2.649 |
| O/S PERIM (mm) | 398.37 |
| Ixx ($cm^4$) | 169.3 |

### 90mm Sleeve

| | |
|---|---|
| SECTIONB | R-25015 |
| AREA (sqmm) | 544 |
| WEIGHT (kg/m) | 1.469 |
| O/S PERIM (mm) | 280 |
| Ixx ($cm^4$) | 59.9 |

## Section 10 - Mullion Sections & Sleeves

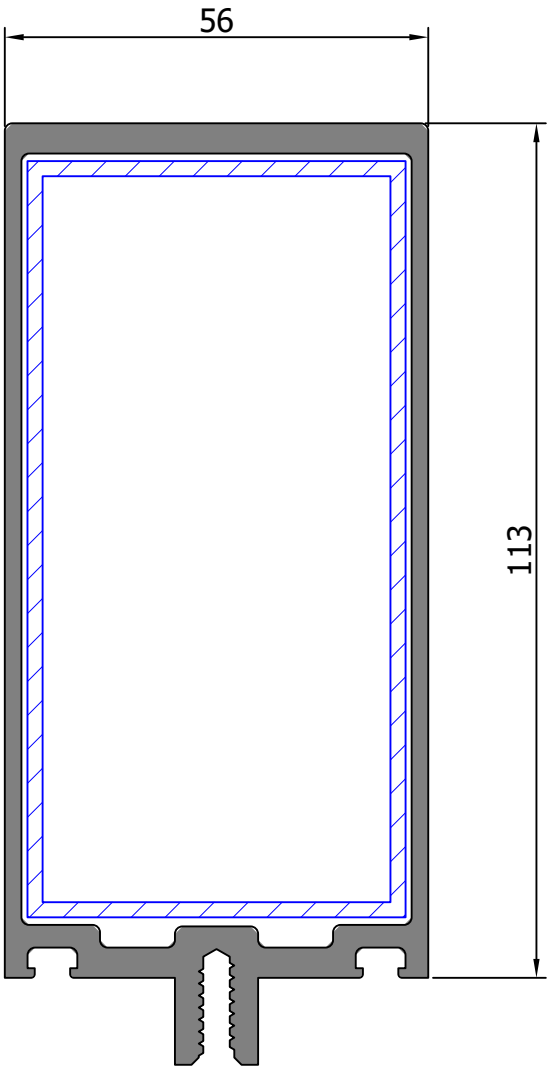


### 113mm Mullion

| | |
|---|---|
| SECTIONB | R-M4 |
| AREA (sqmm) | 1025.1 |
| WEIGHT (kg/m) | 2.786 |
| O/S PERIM (mm) | 418.37 |
| Ixx ($cm^4$) | 209.4 |

### 100mm Sleeve

| | |
|---|---|
| SECTIONB | R-20852 |
| AREA (sqmm) | 584 |
| WEIGHT (kg/m) | 1.577 |
| O/S PERIM (mm) | 300 |
| Ixx ($cm^4$) | 77.5 |

## Section 10 - Mullion Sections & Sleeves

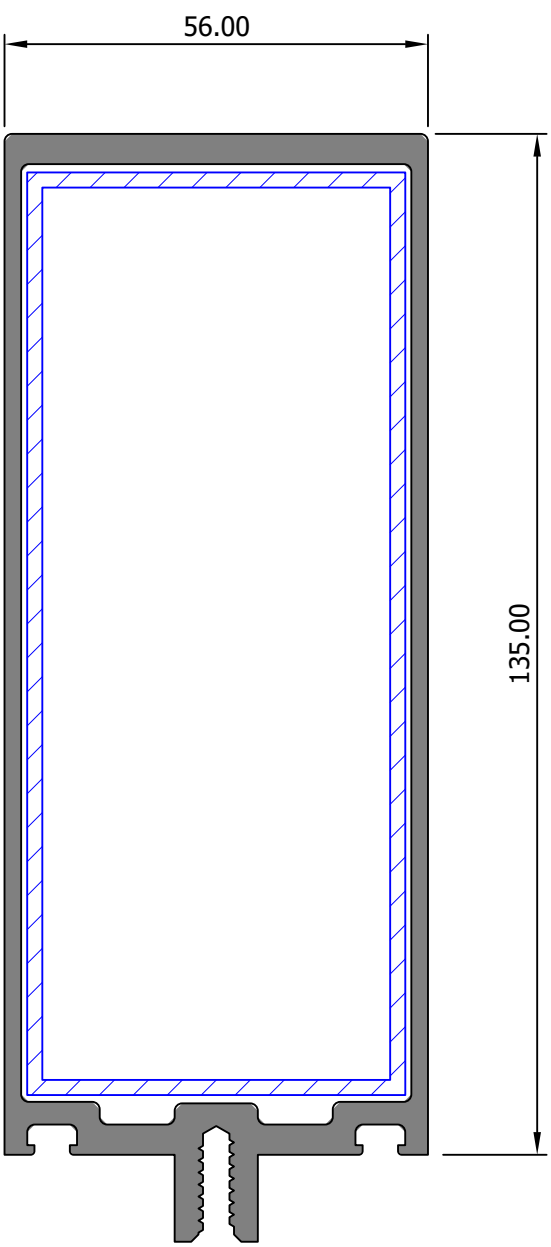


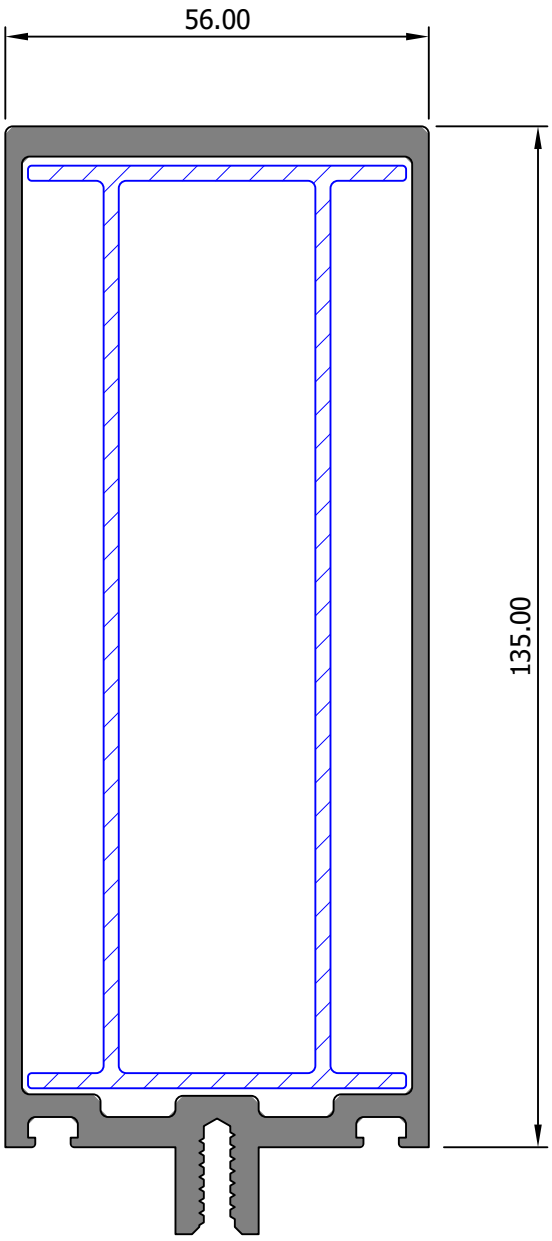


135mm Mullion

| SECTION | BR-M3 |
|---|---|
| AREA (sqmm) | 1121.9 |
| WEIGHT (kg/m) | 3.036 |
| O/S PERIM (mm) | 461.43 |
| Ixx ($cm^4$) | 315.7 |

| SECTION | BR-MS3 |
|---|---|
| AREA (sqmm) | 672 |
| WEIGHT (kg/m) | 1.82 |
| O/S PERIM (mm) | 672 |
| Ixx ($cm^4$) | 126 |

120mm Sleeve

| SECTION | BR-25017 |
|---|---|
| AREA (sqmm) | 672 |
| WEIGHT (kg/m) | 1.814 |
| O/S PERIM (mm) | 344 |
| Ixx ($cm^4$) | 126 |

## Section 10 - Mullion Sections & Sleeves

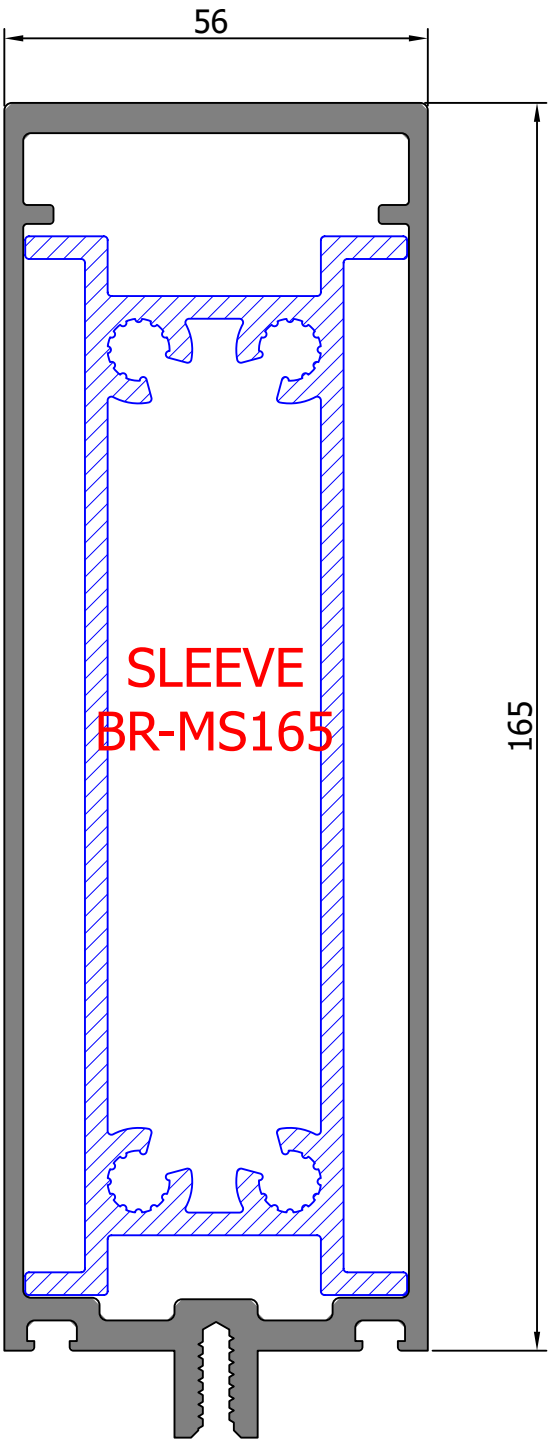


### 165mm Mullion

| SECTION | BR-M2 |
|---|---|
| AREA (sqmm) | 1366.3 |
| WEIGHT (kg/m) | 3.689 |
| O/S PERIM (mm) | 522.37 |
| Ixx ($cm^4$) | 534.9 |

### 140mm Sleeve

| SECTION | BR-MS165 |
|---|---|
| AREA (sqmm) | 1282 |
| WEIGHT (kg/m) | 3.464 |
| O/S PERIM (mm) | 441 |
| Ixx ($cm^4$) | 245.1 |

## Section 10 - Mullion Sections & Sleeves

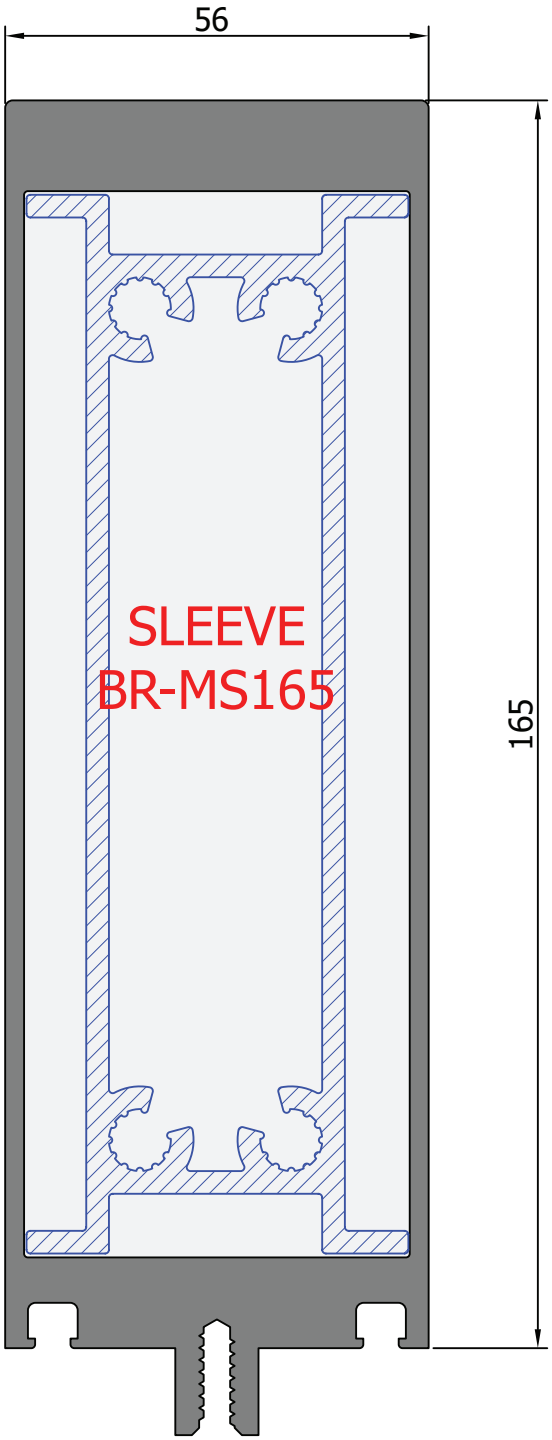


### Heavy 165mm Mullion

| | |
|---|---|
| SECTION | BR-M1 |
| AREA (sqmm) | 2044 |
| WEIGHT (kg/m) | 5.519 |
| O/S PERIM (mm) | 530.37 |
| Ixx ($cm^4$) | 913.3 |

### 140mm Sleeve

| | |
|---|---|
| SECTION | BR-MS165 |
| AREA (sqmm) | 1282 |
| WEIGHT (kg/m) | 3.464 |
| O/S PERIM (mm) | 441 |
| Ixx ($cm^4$) | 245.1 |

## Section 10 - Mullion Sections & Sleeves

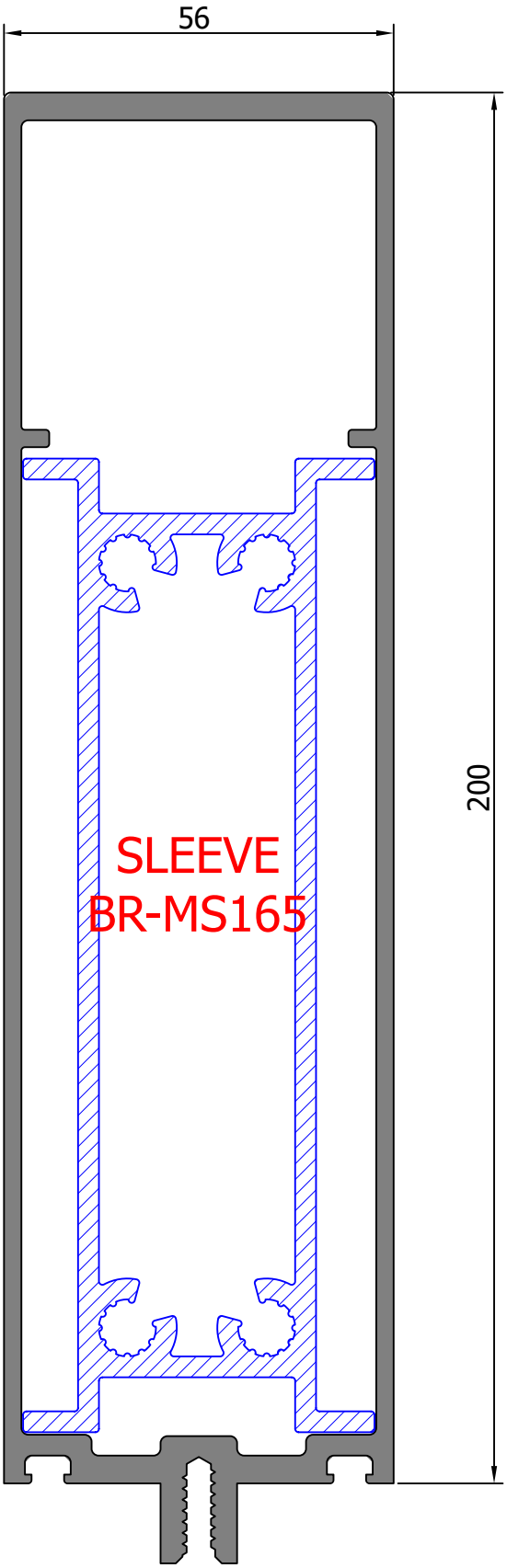


### 200mm Mullion

| | |
|---|---|
| SECTIONB | R-M200 |
| AREA (sqmm) | 1541.3 |
| WEIGHT (kg/m) | 4.061 |
| O/S PERIM (mm) | 600.37 |
| Ixx ($cm^4$) | 827.2 |

### 140mm Sleeve

| | |
|---|---|
| SECTIONB | R-MS165 |
| AREA (sqmm) | 1282 |
| WEIGHT (kg/m) | 3.464 |
| O/S PERIM (mm) | 441 |
| Ixx ($cm^4$) | 245.1 |

## Section 10 - Mullion Sections & Sleeves

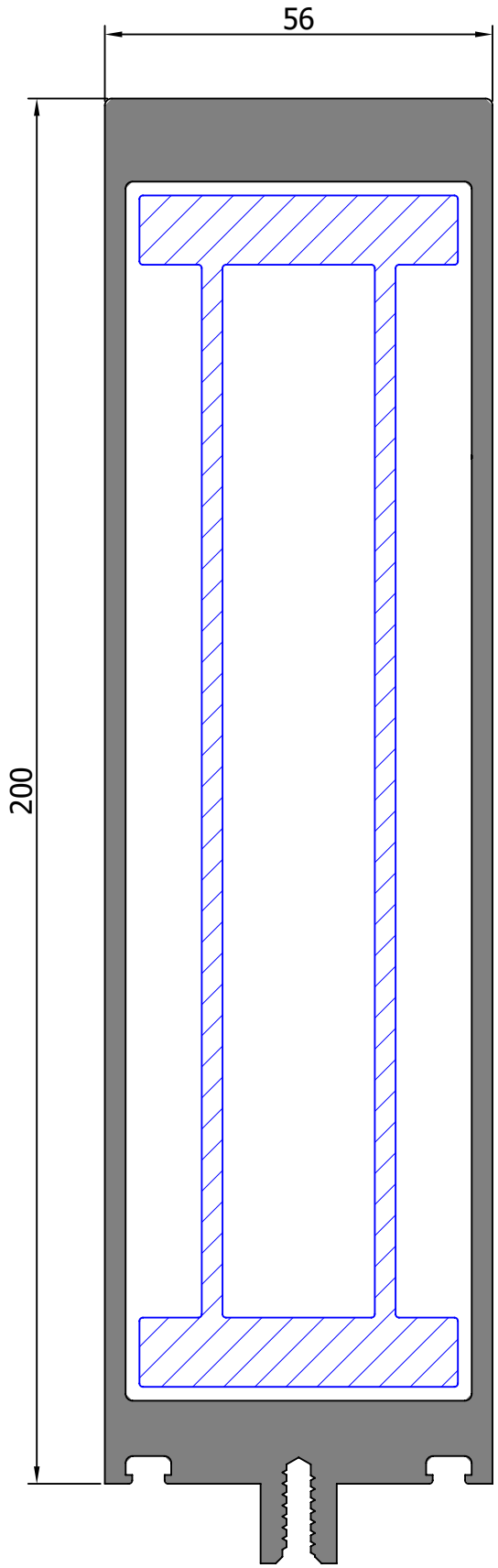


### Heavy 200mm Mullion

| | |
|---|---|
| SECTION | BR-M201 |
| AREA (sqmm) | 2421.5 |
| WEIGHT (kg/m) | 6.539 |
| O/S PERIM (mm) | 592.37 |
| Ixx ($cm^4$) | 1495 |

### 172mm Sleeve

| | |
|---|---|
| SECTION | BR-MS201 |
| AREA (sqmm) | 1832.1 |
| WEIGHT (kg/m) | 4.983 |
| O/S PERIM (mm) | 467.57 |
| Ixx ($cm^4$) | 780 |

## Section 10 - Mullion Sections & Sleeves

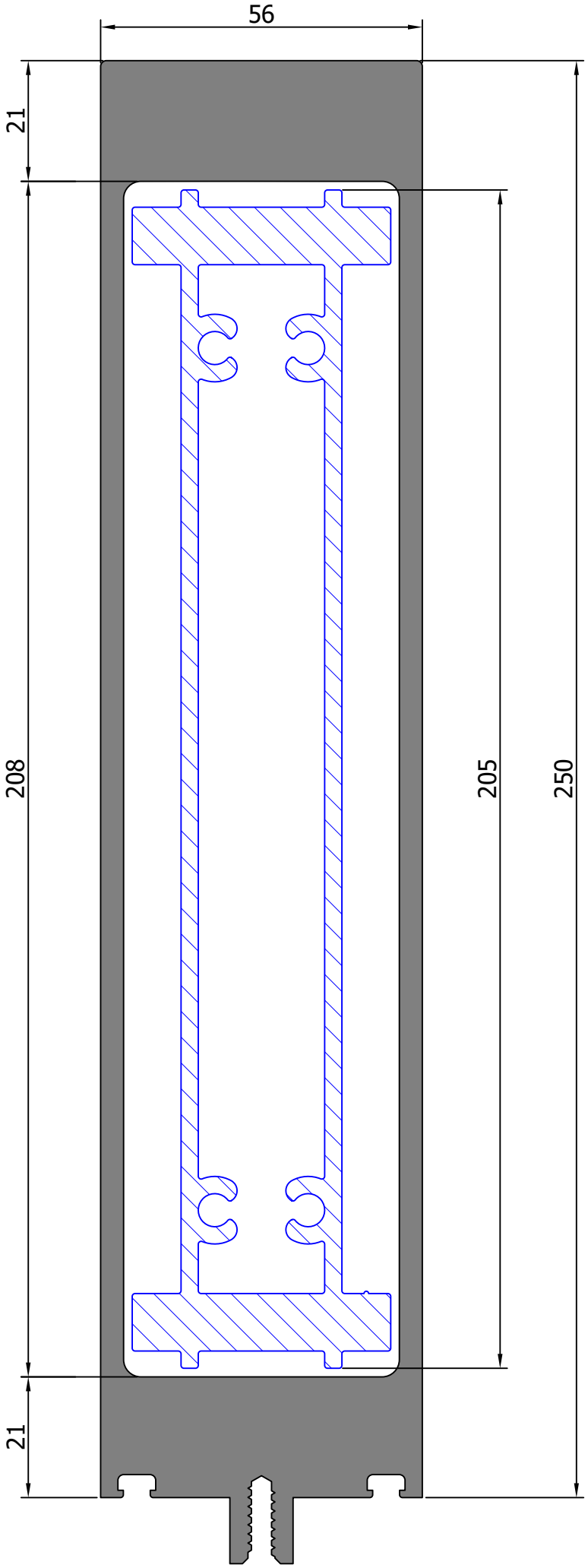


### 250mm Mullion

| | |
|---|---|
| SECTION | BR-M250 |
| AREA (sqmm) | 4044.61 |
| WEIGHT (kg/m) | 10.920 |
| O/S PERIM (mm) | 692.37 |
| Ixx ($cm^4$) | 3747 |

### 205mm Sleeve

| | |
|---|---|
| SECTION | BR-MS250 |
| AREA (sqmm) | 2184.04 |
| WEIGHT (kg/m) | 5.896 |
| O/S PERIM (mm) | 540.45 |
| Ixx ($cm^4$) | 1226 |

SCALE 1:2

## Section 11 - Corner Mullion Sections & Sleeves

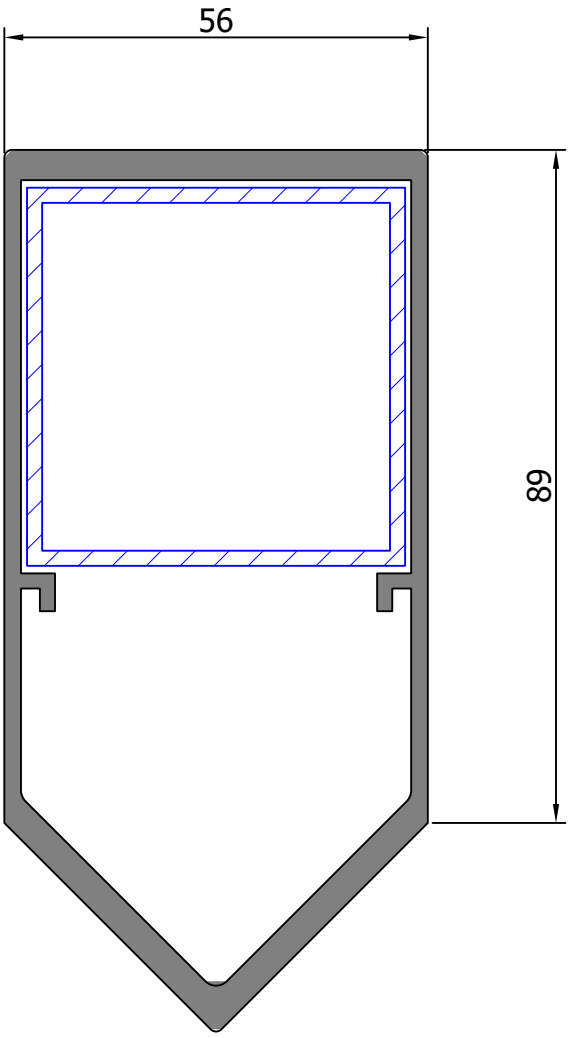


### 90° Corner 89mm Mullion

| SECTION | BR-M22 |
|---|---|
| AREA (sqmm) | 925.1 |
| WEIGHT (kg/m) | 2.498 |
| O/S PERIM (mm) | 311.91 |
| Ixx ($cm^4$) | 152.4 |

### 50mm Sleeve

| SECTION | BR-20593 |
|---|---|
| AREA (sqmm) | 384 |
| WEIGHT (kg/m) | 1.037 |
| O/S PERIM (mm) | 200 |
| Ixx ($cm^4$) | 14.7 |

## Section 11 - Corner Mullion Sections & Sleeves

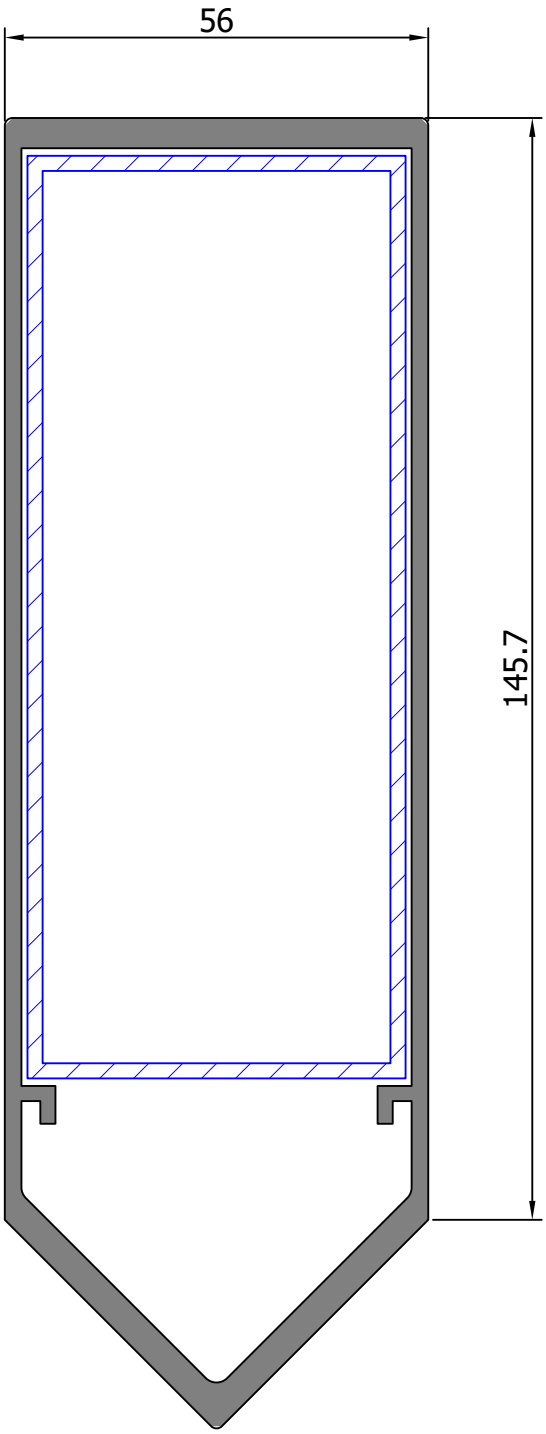


### 90° Corner 145mm Mullion

| | |
|---|---|
| SECTIONB | R-M23 |
| AREA (sqmm) | 1174.6 |
| WEIGHT (kg/m) | 3.171 |
| O/S PERIM (mm) | 425.31 |
| Ixx ($cm^4$) | 429.9 |

### 120mm Sleeve

| | |
|---|---|
| SECTIONB | R-25017 |
| AREA (sqmm) | 672 |
| WEIGHT (kg/m) | 1.814 |
| O/S PERIM (mm) | 344 |
| Ixx ($cm^4$) | 126 |

## Section 11 - Corner Mullion Sections & Sleeves

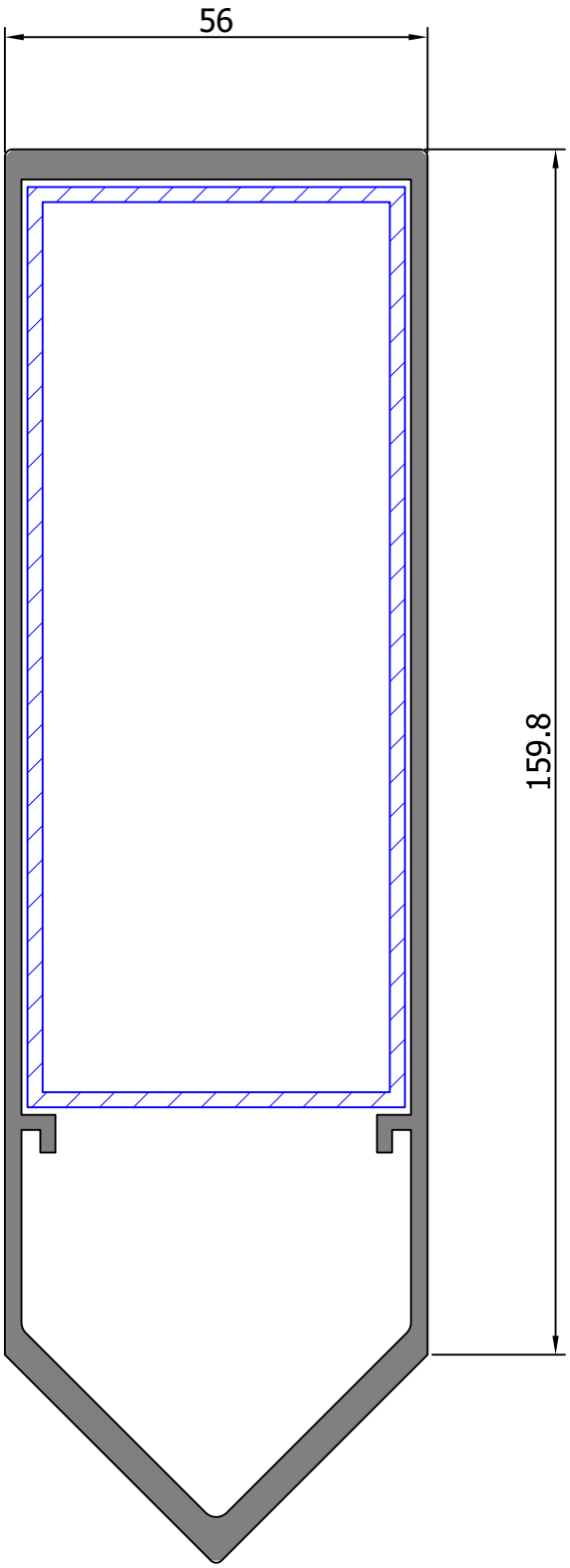


### 90° Corner 160mm Mullion

| | |
|---|---|
| SECTIONB | R-M24 |
| AREA (sqmm) | 1236.6 |
| WEIGHT (kg/m) | 3.339 |
| O/S PERIM (mm) | 453.51 |
| Ixx ($cm^4$) | 522.4 |

### 120mm Sleeve

| | |
|---|---|
| SECTIONB | R-25017 |
| AREA (sqmm) | 672 |
| WEIGHT (kg/m) | 1.814 |
| O/S PERIM (mm) | 344 |
| Ixx ($cm^4$) | 126 |

## Section 11 - Corner Mullion Sections & Sleeves

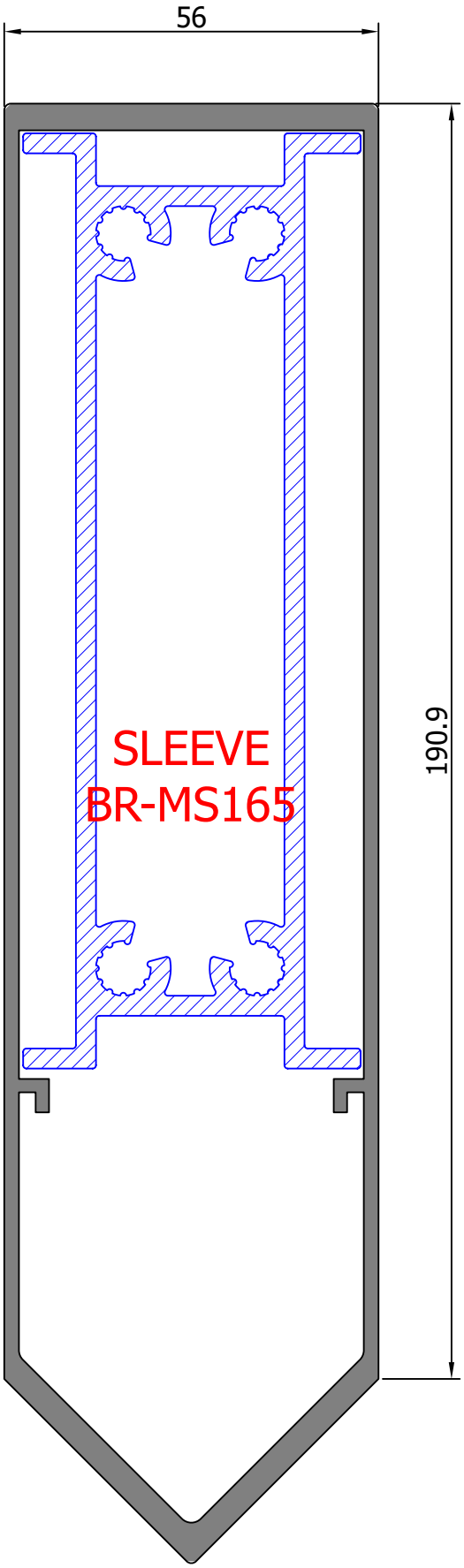


### 90° Corner 190mm Mullion

| SECTION | BR-M25 |
|---|---|
| AREA (sqmm) | 1373.5 |
| WEIGHT (kg/m) | 3.708 |
| O/S PERIM (mm) | 515.71 |
| Ixx ($cm^4$) | 744.2 |

### 140mm Sleeve

| SECTION | BR-MS165 |
|---|---|
| AREA (sqmm) | 1282 |
| WEIGHT (kg/m) | 3.464 |
| O/S PERIM (mm) | 441 |
| Ixx ($cm^4$) | 245.1 |

## Section 11 - Corner Mullion Sections & Sleeves

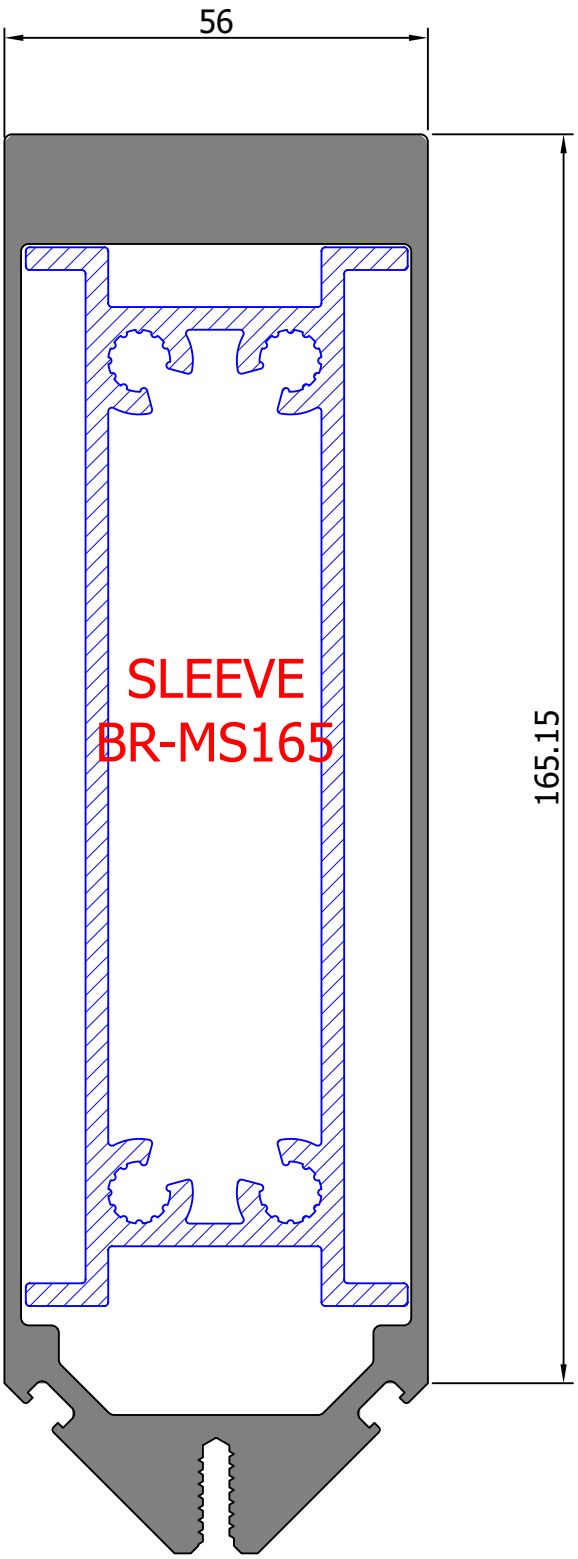


### 90° Corner 165mm Mullion

| SECTION | BR-CM1 |
|---|---|
| AREA (sqmm) | 2070.8 |
| WEIGHT (kg/m) | 5.591 |
| O/S PERIM (mm) | 517.96 |
| Ixx ($cm^4$) | 1086.9 |

### 140mm Sleeve

| SECTION | BR-MS165 |
|---|---|
| AREA (sqmm) | 1282 |
| WEIGHT (kg/m) | 3.464 |
| O/S PERIM (mm) | 441 |
| Ixx ($cm^4$) | 245.1 |

## Section 11 - Corner Mullion Sections & Sleeves

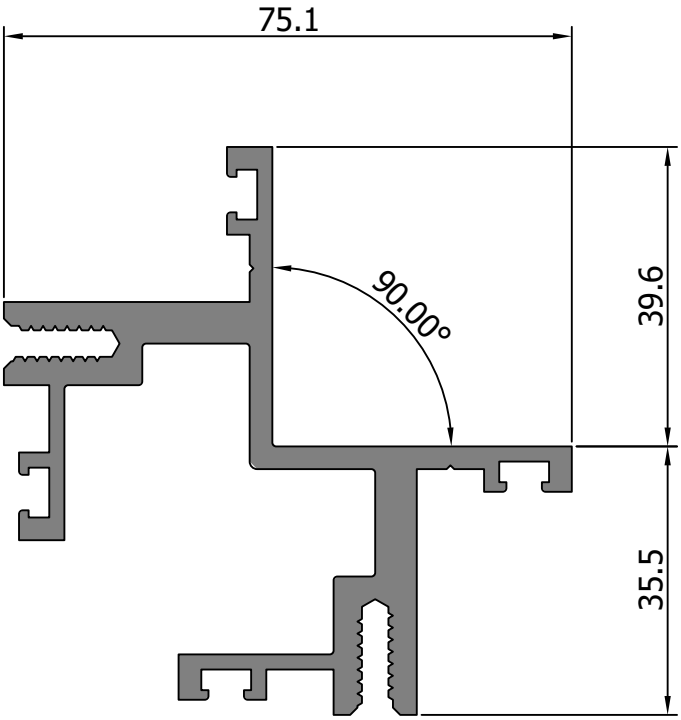


### 90° Corner Mullion

| | |
|---|---|
| SECTIONB | R-252 |
| AREA (sqmm) | 837.6 |
| WEIGHT (kg/m) | 2.262 |
| O/S PERIM (mm) | 550.7 |

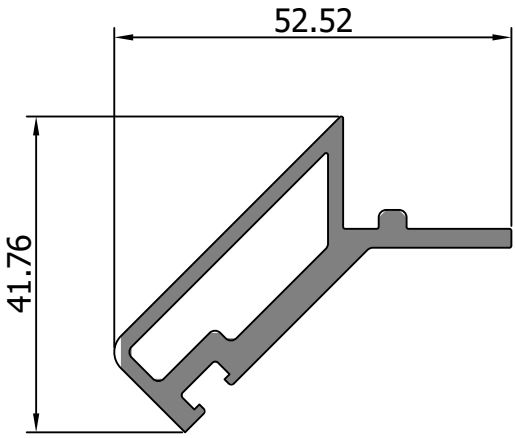


### MULLION ADAPTOR

| | |
|---|---|
| SECTIONB | R-MA1 |
| AREA (sqmm) | 333.3 |
| WEIGHT (kg/m) | 0.900 |
| O/S PERIM (mm) | 166.2 |

## Section 11 - Corner Mullion Sections & Sleeves

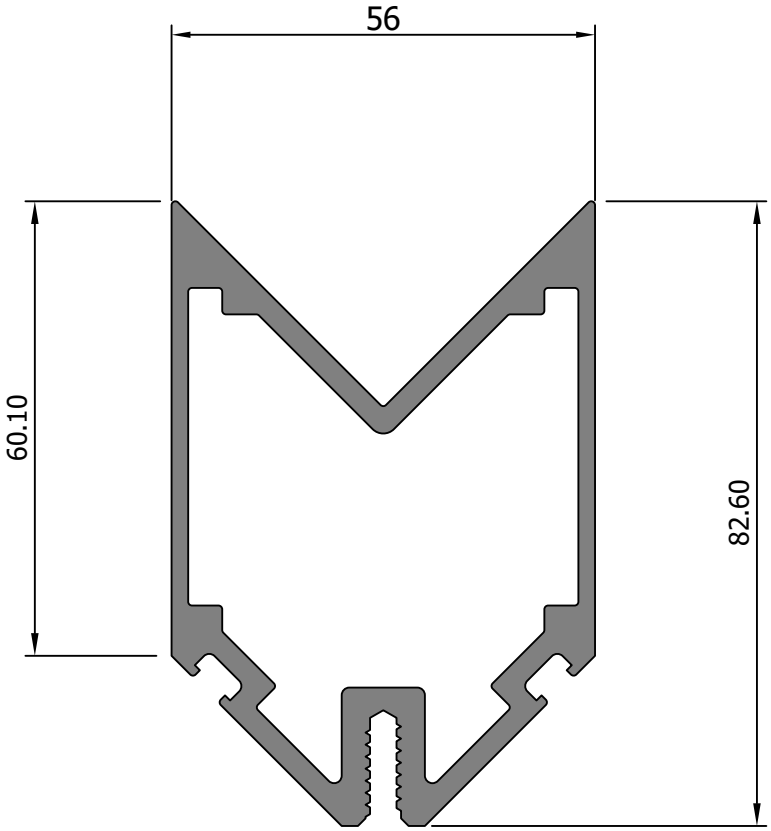


CORNER MULLION

| | |
|---|---|
| SECTIONB | R-CM2 |
| AREA (sqmm) | 935.6 |
| WEIGHT (kg/m) | 2.530 |
| O/S PERIM (mm) | 1096 |

## Section 12 - 135 ° Corner Mullion Sections & Sleeves

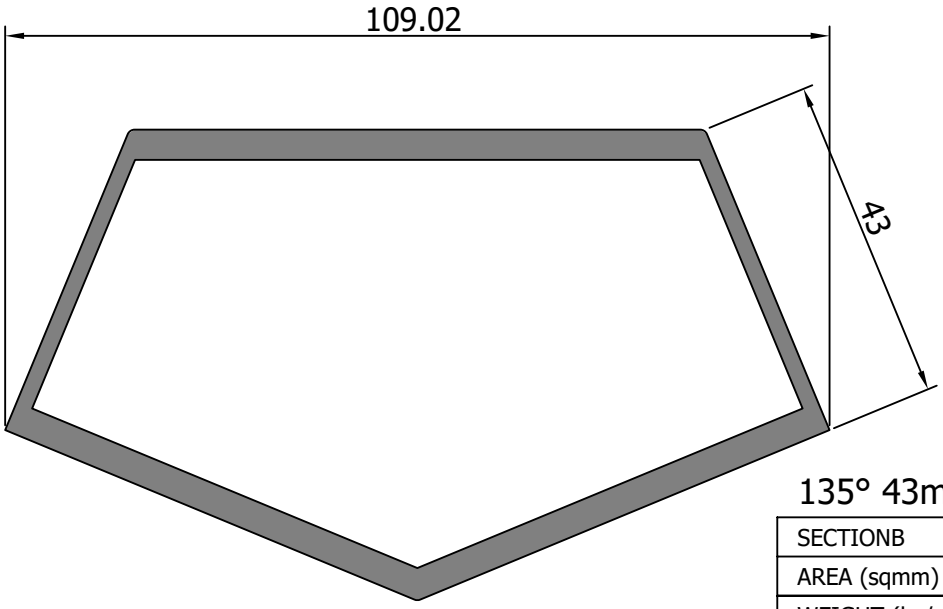


### 135° 43mm Corner Mullion

| SECTIONB | R-M16 |
|---|---|
| AREA (sqmm) | 930.8 |
| WEIGHT (kg/m) | 2.513 |
| O/S PERIM (mm) | 279.75 |
| Ixx ($cm^4$) | 45.8 |

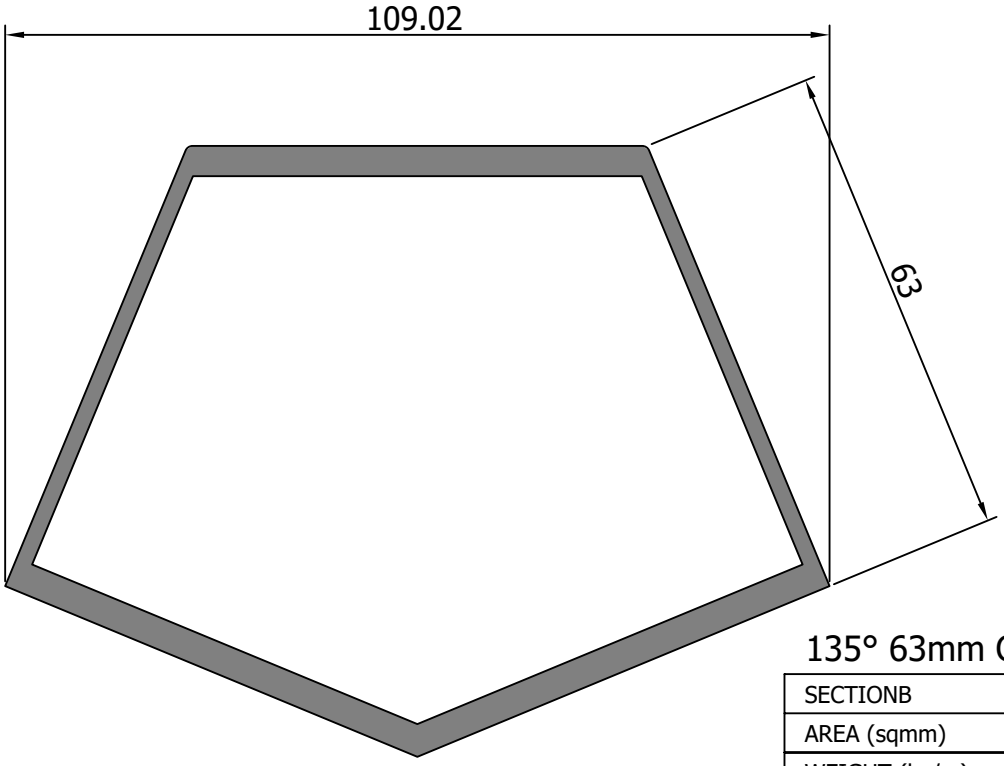


### 135° 63mm Corner Mullion

| SECTIONB | R-M17 |
|---|---|
| AREA (sqmm) | 957.6 |
| WEIGHT (kg/m) | 2.585 |
| O/S PERIM (mm) | 304.44 |
| Ixx ($cm^4$) | 81.09 |

## Section 12 - 135 ° Corner Mullion Sections & Sleeves

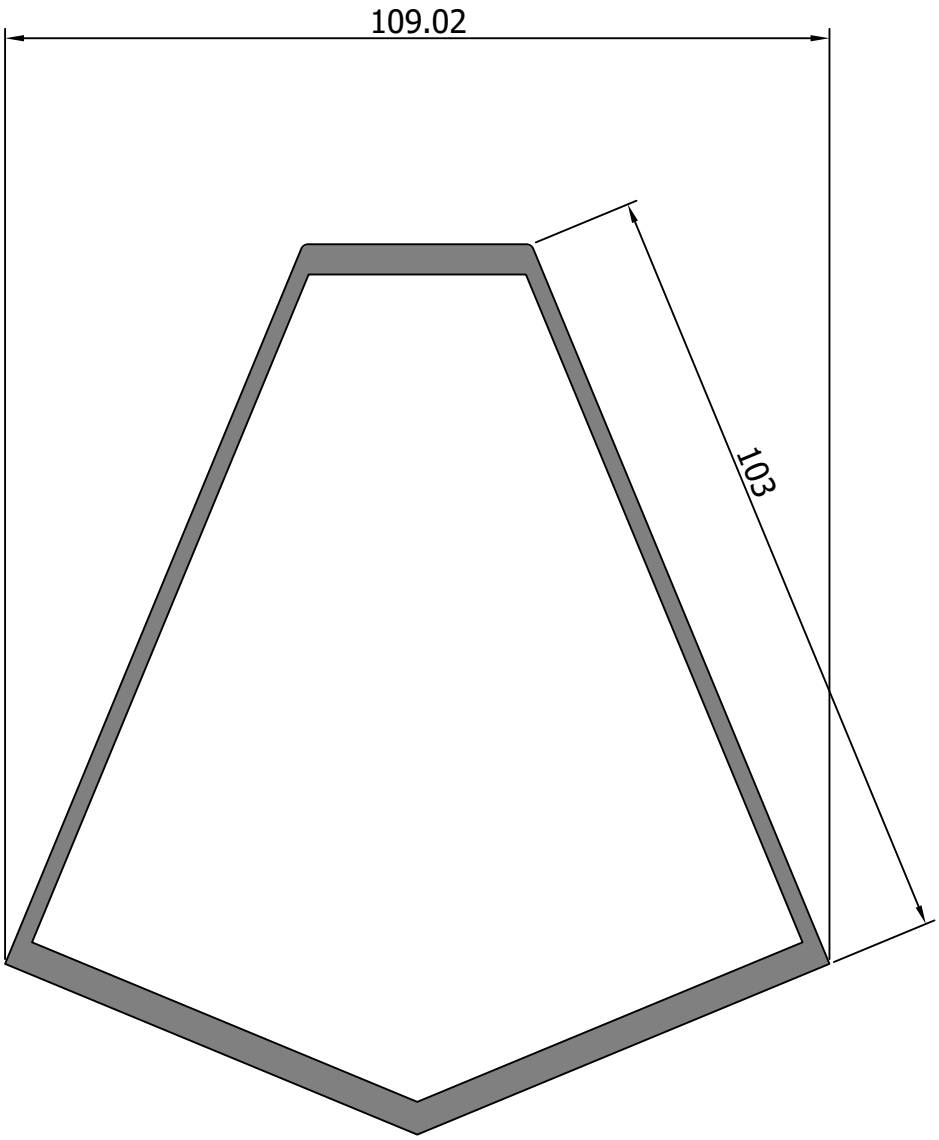


### 135° 103mm Corner Mullion

| | |
|---|---|
| SECTIONB | R-M18 |
| AREA (sqmm) | 1011.1 |
| WEIGHT (kg/m) | 2.730 |
| O/S PERIM (mm) | 353.83 |
| Ixx ($cm^4$) | 162.9 |

## Section 12 - 135 ° Corner Mullion Sections & Sleeves

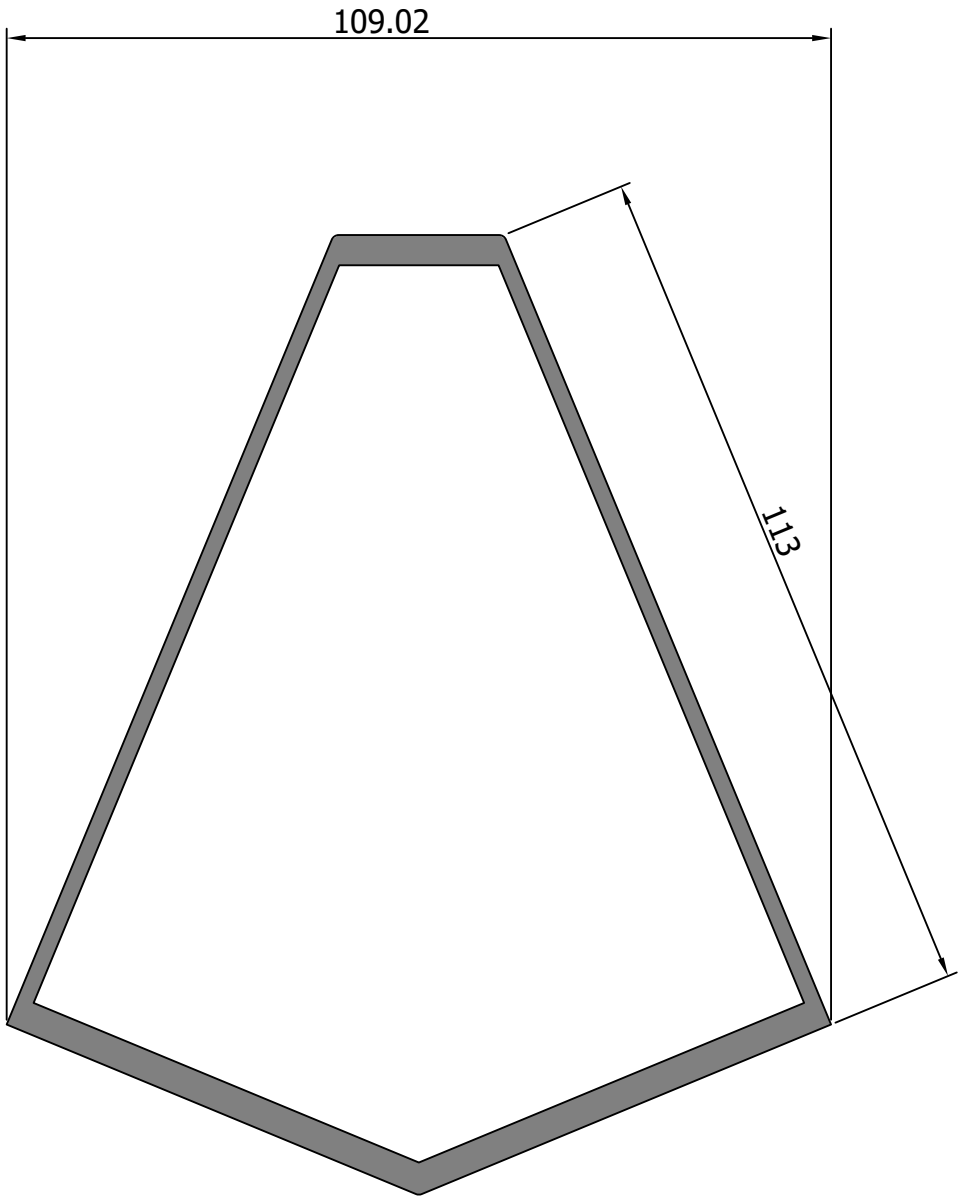


### 135° 113mm Corner Mullion

| | |
|---|---|
| SECTION | BR-M19 |
| AREA (sqmm) | 1024.5 |
| WEIGHT (kg/m) | 2.766 |
| O/S PERIM (mm) | 366.17 |
| Ixx ($cm^4$) | 182.7 |

## Section 12 - 135 ° Corner Mullion Sections & Sleeves

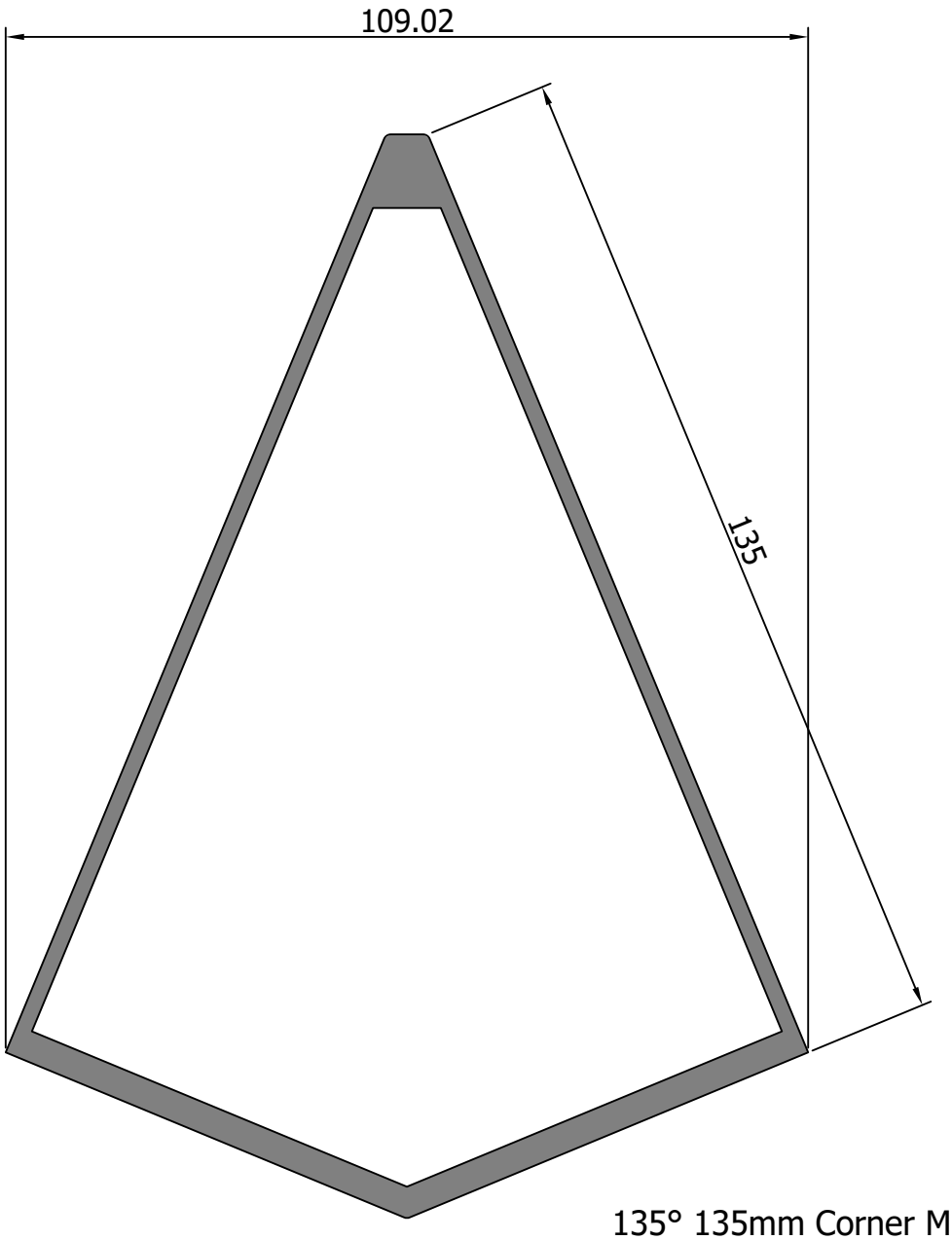


### 135° 135mm Corner Mullion

| | |
|---|---|
| SECTIONB | R-M20 |
| AREA (sqmm) | 1094.3 |
| WEIGHT (kg/m) | 2.955 |
| O/S PERIM (mm) | 393.33 |
| Ixx ($cm^4$) | 248.2 |

## Section 12 - 135 ° Corner Mullion Sections & Sleeves

### 135° Corner External Mullion Adaptor

| | |
|---|---|
| SECTIONB | R-251 |
| AREA (sqmm) | 948.9 |
| WEIGHT (kg/m) | 2.562 |
| O/S PERIM (mm) | 625.4 |

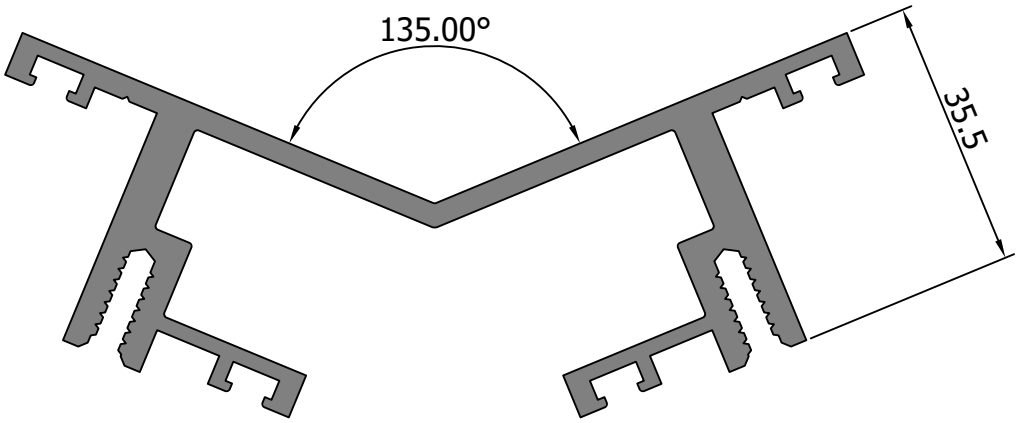

## Section 13 - Half Mullion Section

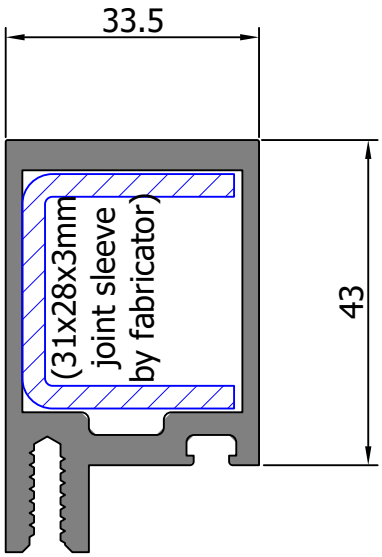


### 43mm PERIMETER MULLION/TRANSOM

| | |
|---|---|
| SECTIONB | R-M29 |
| AREA (sqmm) | 524.7 |
| WEIGHT (kg/m) | 1.417 |
| O/S PERIM (mm) | 223.50 |
| Ixx (cm⁴) | 16.80 |

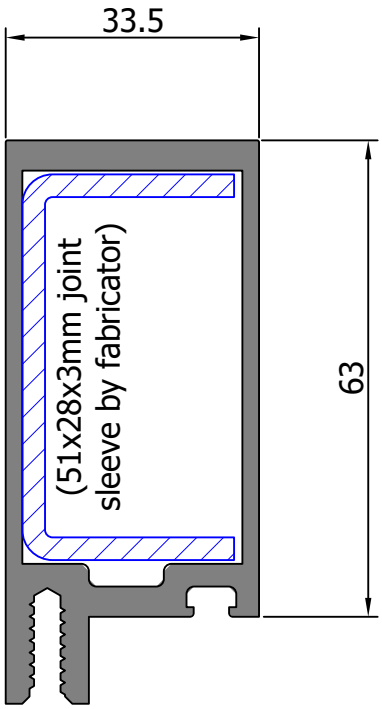


### 63mm PERIMETER MULLION/TRANSOM

| | |
|---|---|
| SECTIONB | R-M30 |
| AREA (sqmm) | 612.7 |
| WEIGHT (kg/m) | 1.654 |
| O/S PERIM (mm) | 263.50 |
| Ixx (cm⁴) | 39.50 |

## Section 13 - Half Mullion Section

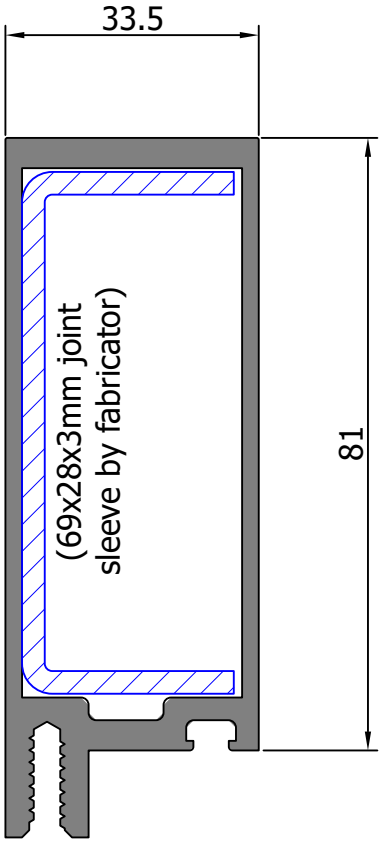


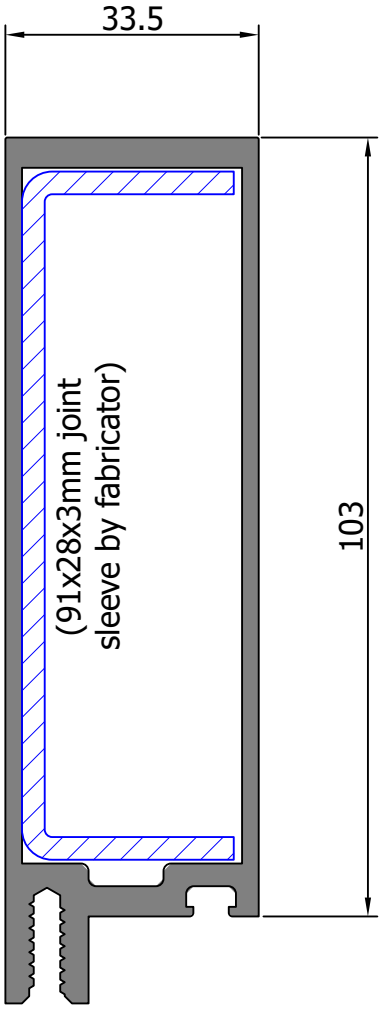


### 81mm PERIMETER MULLION/TRANSOM

| | |
|---|---|
| SECTIONB | R-M130 |
| AREA (sqmm) | 691.9 |
| WEIGHT (kg/m) | 1.868 |
| O/S PERIM (mm) | 299.50 |
| Ixx ($cm^4$) | 70.30 |

### 103mm PERIMETER MULLION/TRANSOM

| | |
|---|---|
| SECTIONB | R-M28 |
| AREA (sqmm) | 788.7 |
| WEIGHT (kg/m) | 2.130 |
| O/S PERIM (mm) | 343.50 |
| Ixx ($cm^4$) | 123.20 |

## Section 13 - Half Mullion Section

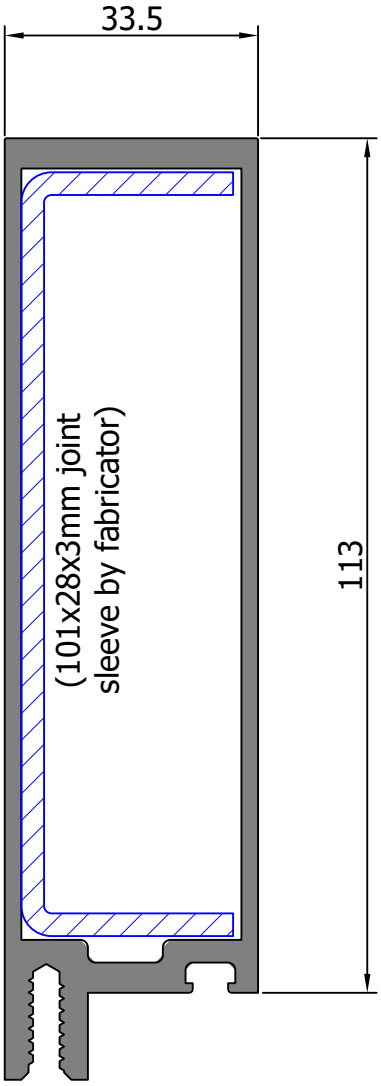


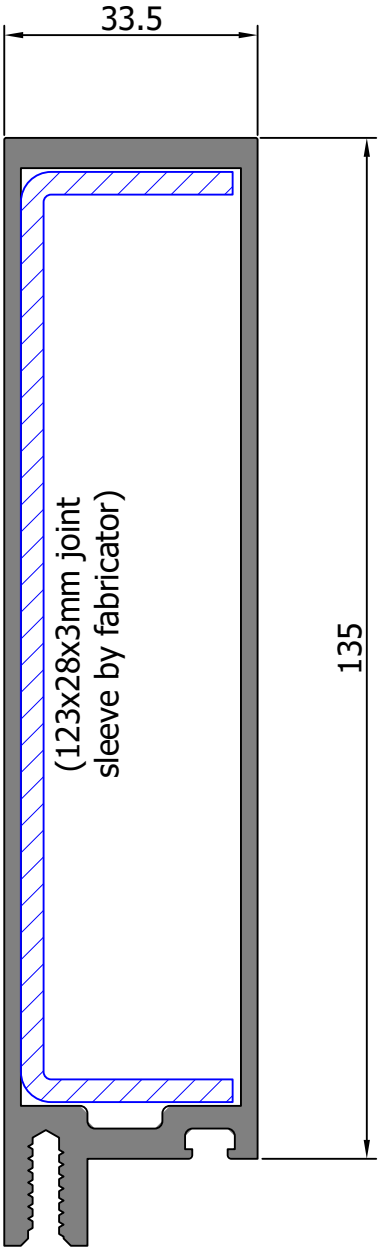


### 113mm PERIMETER MULLION/TRANSOM

| SECTION | BR-M31 |
|---|---|
| AREA (sqmm) | 832.7 |
| WEIGHT (kg/m) | 2.248 |
| O/S PERIM (mm) | 363.50 |
| Ixx ($cm^4$) | 153.30 |

### 135mm PERIMETER MULLION/TRANSOM

| SECTION | BR-M32 |
|---|---|
| AREA (sqmm) | 929.5 |
| WEIGHT (kg/m) | 2.510 |
| O/S PERIM (mm) | 407.50 |
| Ixx ($cm^4$) | 234.70 |

## Section 13 - Half Mullion Section

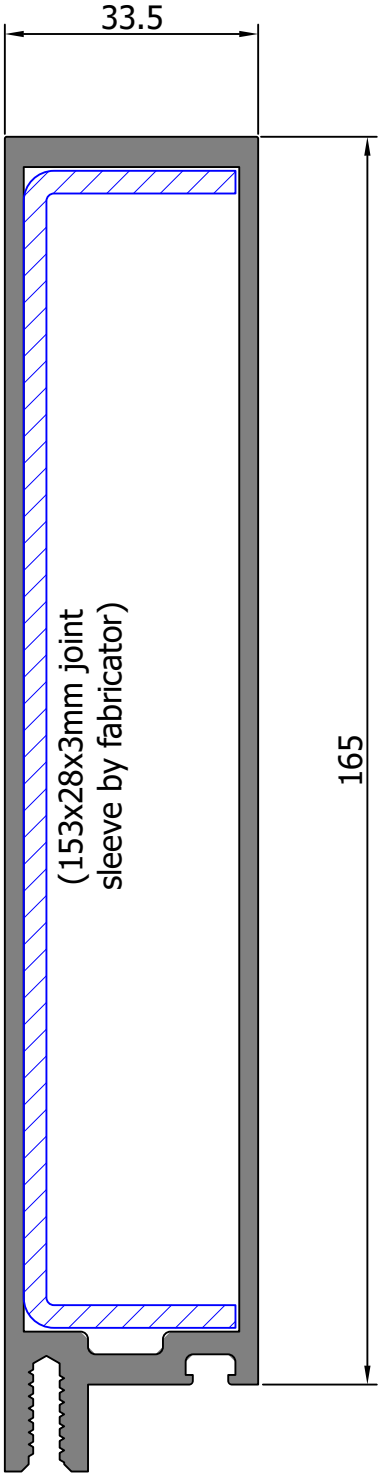


### 165mm PERIMETER MULLION/TRANSOM

| | |
|---|---|
| SECTION | BR-M33 |
| AREA (sqmm) | 1153.9 |
| WEIGHT (kg/m) | 3.116 |
| O/S PERIM (mm) | 467.50 |
| Ixx ($cm^4$) | 401.30 |

## Section14 - Adjustable Corner Mullion

### MULLION HINGE

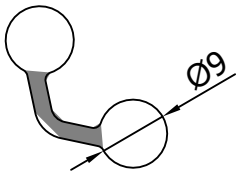


| SECTION | BR-MH1 |
|---|---|
| AREA (sqmm) | 158.1 |
| WEIGHT (kg/m) | 0.427 |
| O/S PERIM (mm) | 79 |

### VARIABLE CORNER MULLION

| SECTION | BR-M27 |
|---|---|
| AREA (sqmm) | 818.09 |
| WEIGHT (kg/m) | 2.209 |
| O/S PERIM (mm) | 504.92 |
| Ixx ($cm^4$) | 166.9 |

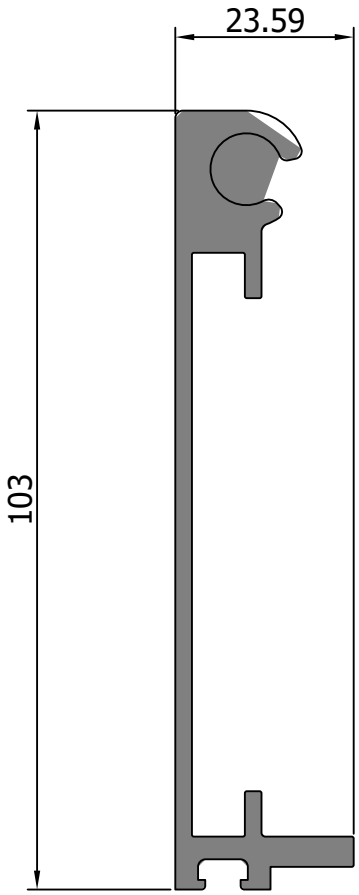


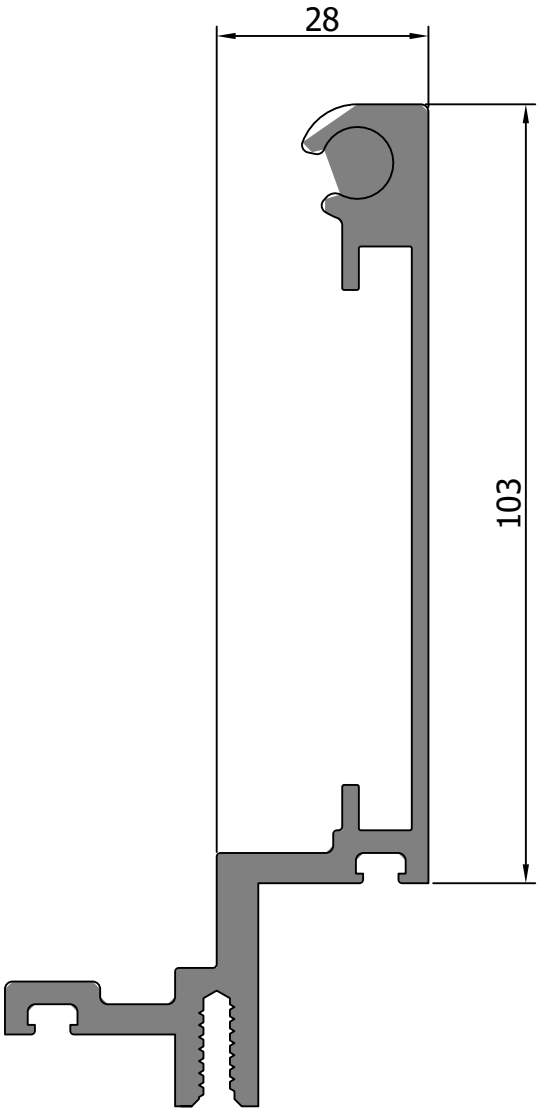


### VARIABLE CORNER MULLION

| SECTION | BR-M26 |
|---|---|
| AREA (sqmm) | 491 |
| WEIGHT (kg/m) | 1.326 |
| O/S PERIM (mm) | 330.2 |
| Ixx ($cm^4$) | 69.6 |

## Section14 - Adjustable Corner Mullion

### VARIABLE CORNER MULLION

| | |
|---|---|
| SECTIONB | R-M36 |
| AREA (sqmm) | 650.79 |
| WEIGHT (kg/m) | 1.757 |
| O/S PERIM (mm) | 459.06 |
| Ixx ($cm^4$) | 227.1 |

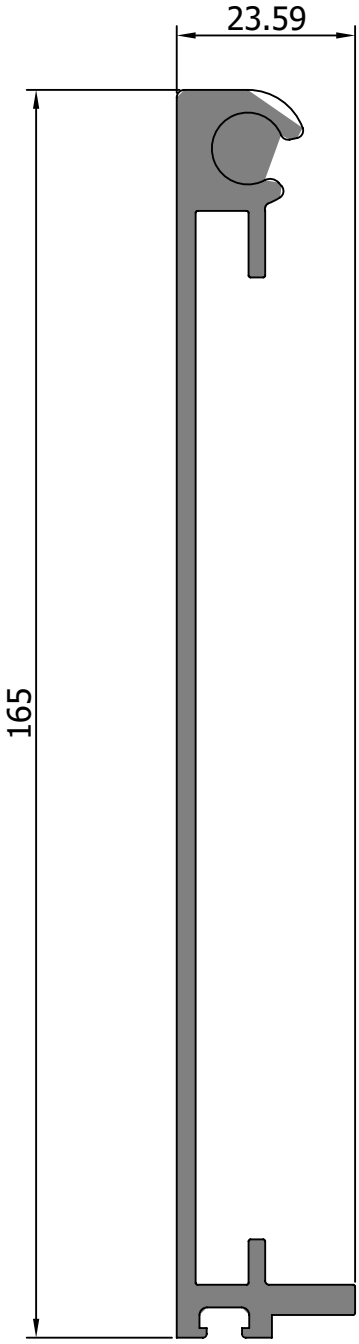


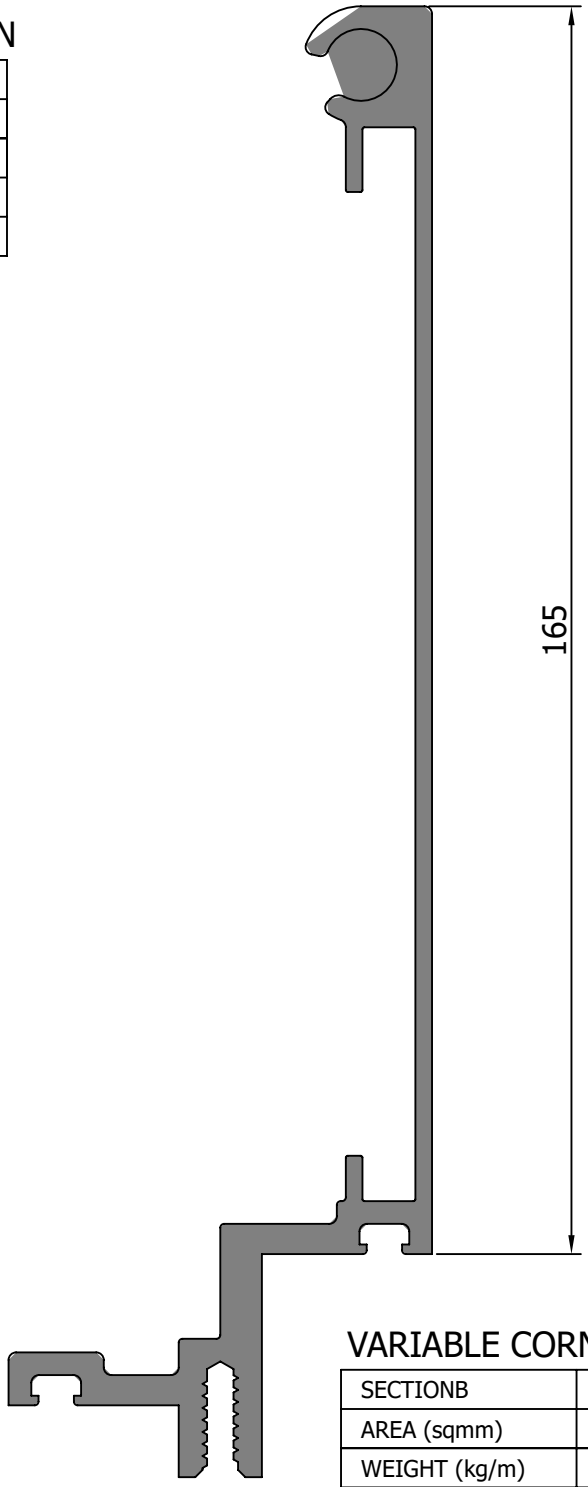


### VARIABLE CORNER MULLION

| | |
|---|---|
| SECTIONB | R-M37 |
| AREA (sqmm) | 977.72 |
| WEIGHT (kg/m) | 2.640 |
| O/S PERIM (mm) | 634.19 |
| Ixx ($cm^4$) | 436.9 |

## Section14 - Adjustable Corner Mullion

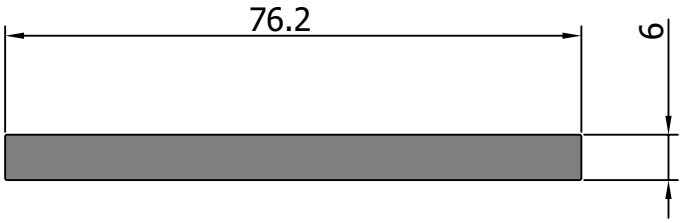


### JOINT PLATE

| | |
|---|---|
| SECTION | BR-11121 |
| AREA (sqmm) | 457.1 |
| WEIGHT (kg/m) | 1.234 |
| O/S PERIM (mm) | 164 |
| Ixx ($cm^4$) | .137 |
| Iyy ($cm^4$) | 22.1 |

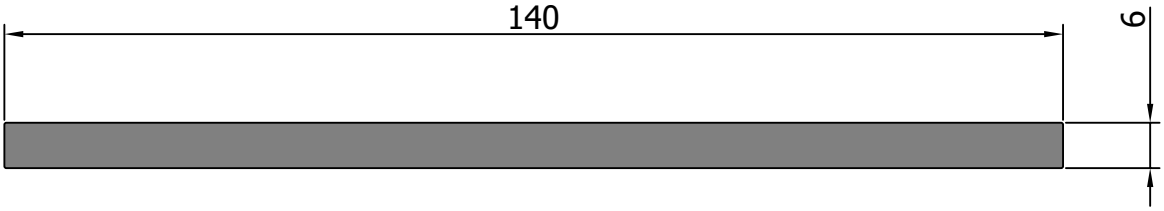


### JOINT PLATE

| | |
|---|---|
| SECTION | BR-08445E |
| AREA (sqmm) | 840 |
| WEIGHT (kg/m) | 2.268 |
| O/S PERIM (mm) | 292 |
| Ixx ($cm^4$) | .252 |
| Iyy ($cm^4$) | 137.2 |

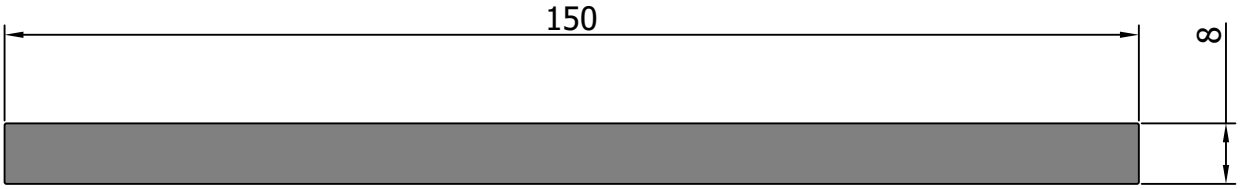


### BASE PLATE TO MS165 SPIGOT

| | |
|---|---|
| SECTION | BR-6742E |
| AREA (sqmm) | 900 |
| WEIGHT (kg/m) | 3.240 |
| O/S PERIM (mm) | 316 |
| Ixx ($cm^4$) | 0.64 |
| Iyy ($cm^4$) | 225 |

## Section15 - One Piece Transom

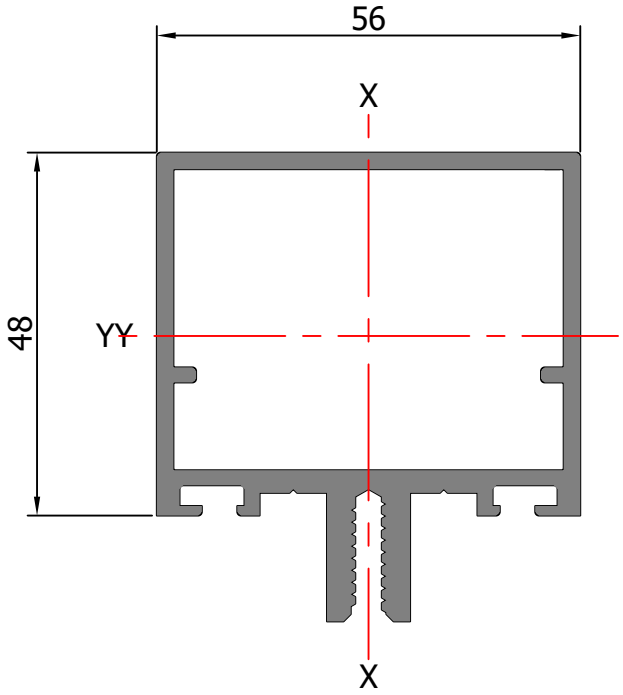


### 48mm Transom

| SECTIONB | R-T46 |
|---|---|
| AREA (sqmm) | 621.4 |
| WEIGHT (kg/m) | 1.683 |
| O/S PERIM (mm) | 322 |
| Iyy ($cm^4$) | 24.3 |
| Ixx ($cm^4$) | 22.4 |

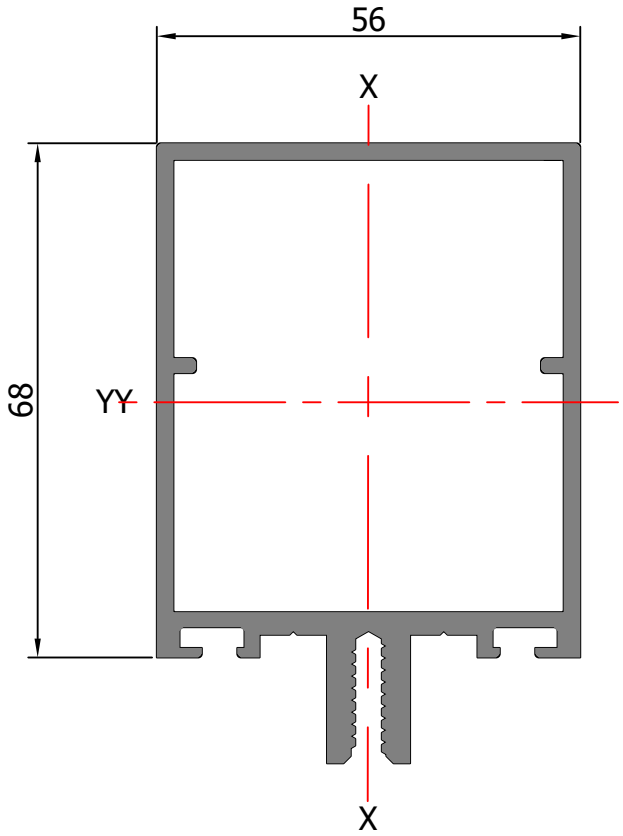


### 68mm Transom

| SECTIONB | R-T68 |
|---|---|
| AREA (sqmm) | 709.4 |
| WEIGHT (kg/m) | 1.922 |
| O/S PERIM (mm) | 362 |
| Iyy ($cm^4$) | 52.6 |
| Ixx ($cm^4$) | 28.8 |

## Section15 - One Piece Transom

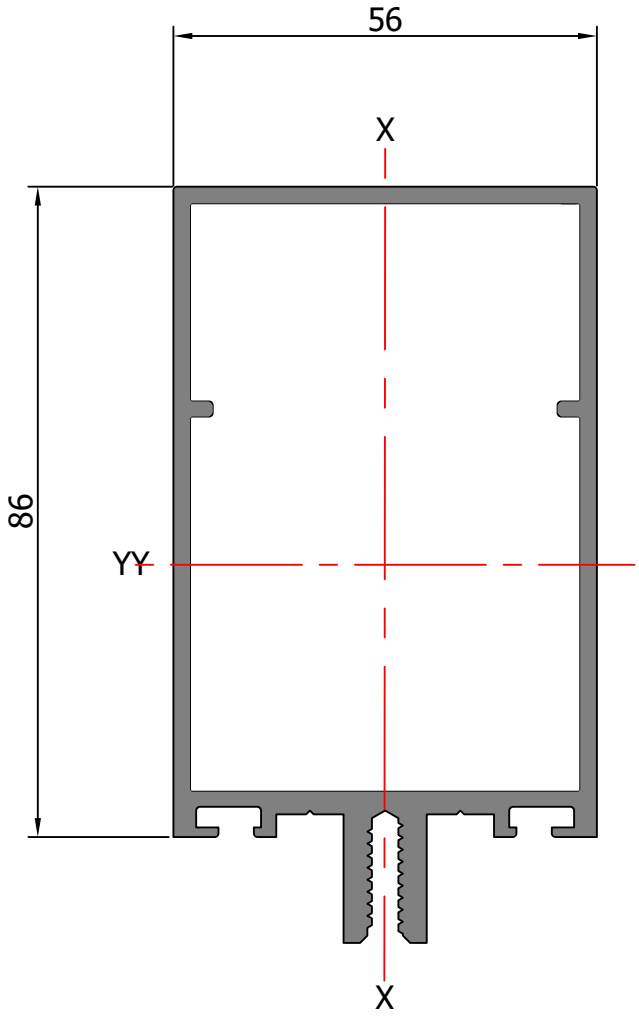


### 86mm Transom

| | |
|---|---|
| SECTIONB | R-T86 |
| AREA (sqmm) | 788.6 |
| WEIGHT (kg/m) | 2.137 |
| O/S PERIM (mm) | 398 |
| Iyy ($cm^4$) | 90.0 |
| Ixx ($cm^4$) | 34.5 |

## Section15 - One Piece Transom

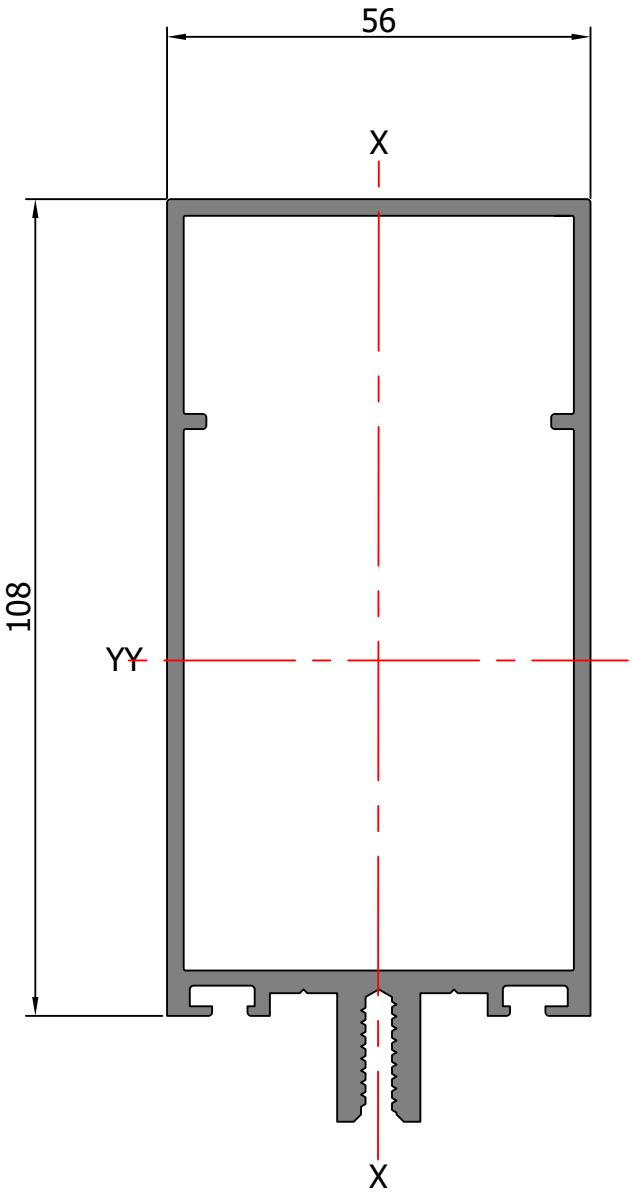


### 108mm Transom

| | |
|---|---|
| SECTIONB | R-T108 |
| AREA (sqmm) | 885.4 |
| WEIGHT (kg/m) | 2.399 |
| O/S PERIM (mm) | 422 |
| Iyy ($cm^4$) | 153.1 |
| Ixx ($cm^4$) | 41.5 |

## Section15 - One Piece Transom

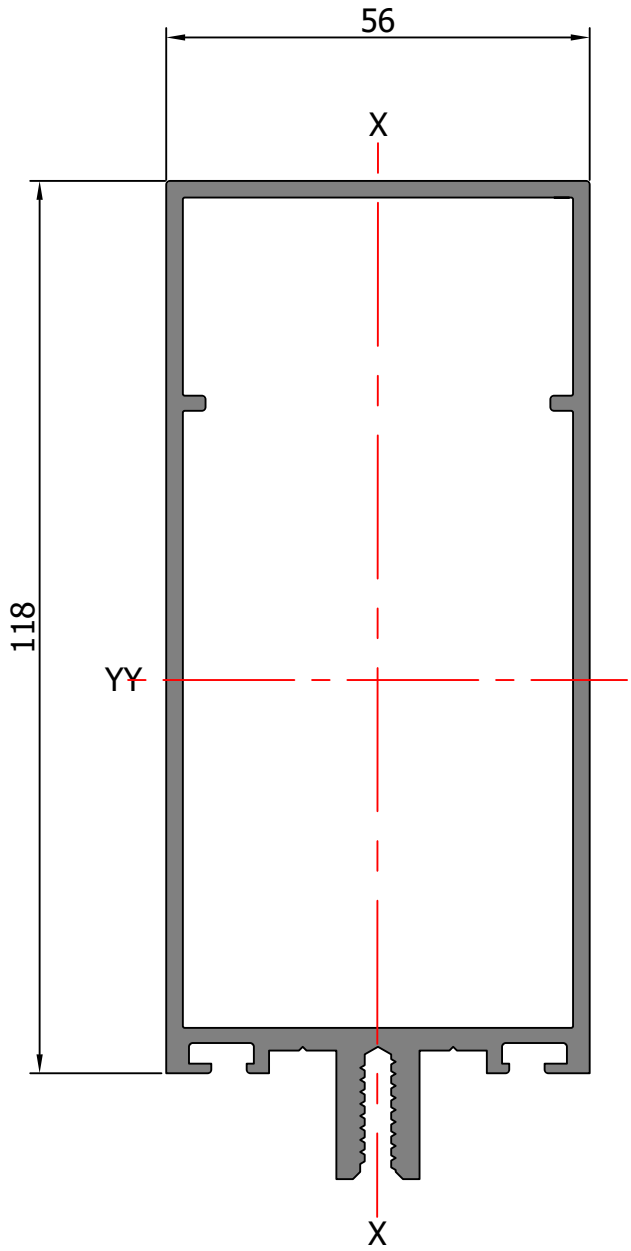


### 118mm Transom

| | |
|---|---|
| SECTIONB | R-T118 |
| AREA (sqmm) | 929.4 |
| WEIGHT (kg/m) | 2.518 |
| O/S PERIM (mm) | 462 |
| Iyy ($cm^4$) | 188.6 |
| Ixx ($cm^4$) | 44.7 |

## Section15 - One Piece Transom

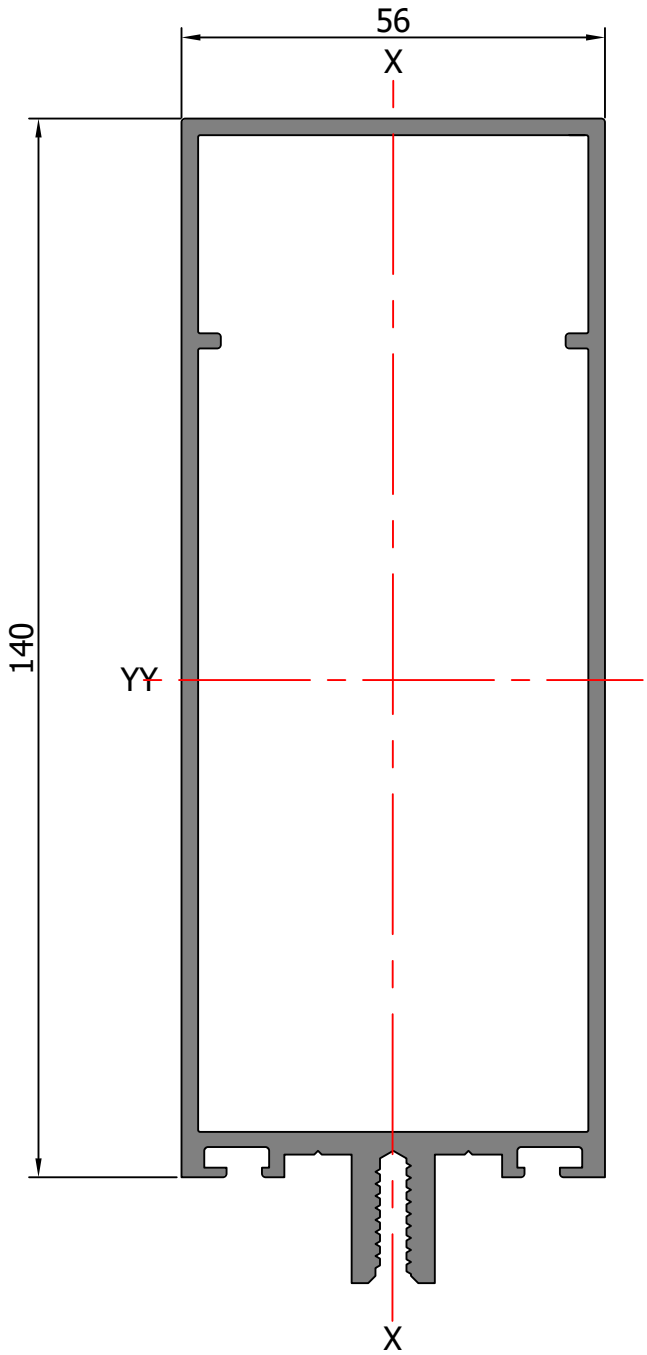


### 140mm Transom

| | |
|---|---|
| SECTIONB | R-T140 |
| AREA (sqmm) | 1026.2 |
| WEIGHT (kg/m) | 2.781 |
| O/S PERIM (mm) | 506 |
| Iyy ($cm^4$) | 283.4 |
| Ixx ($cm^4$) | 51.7 |

## Section15 - One Piece Transom

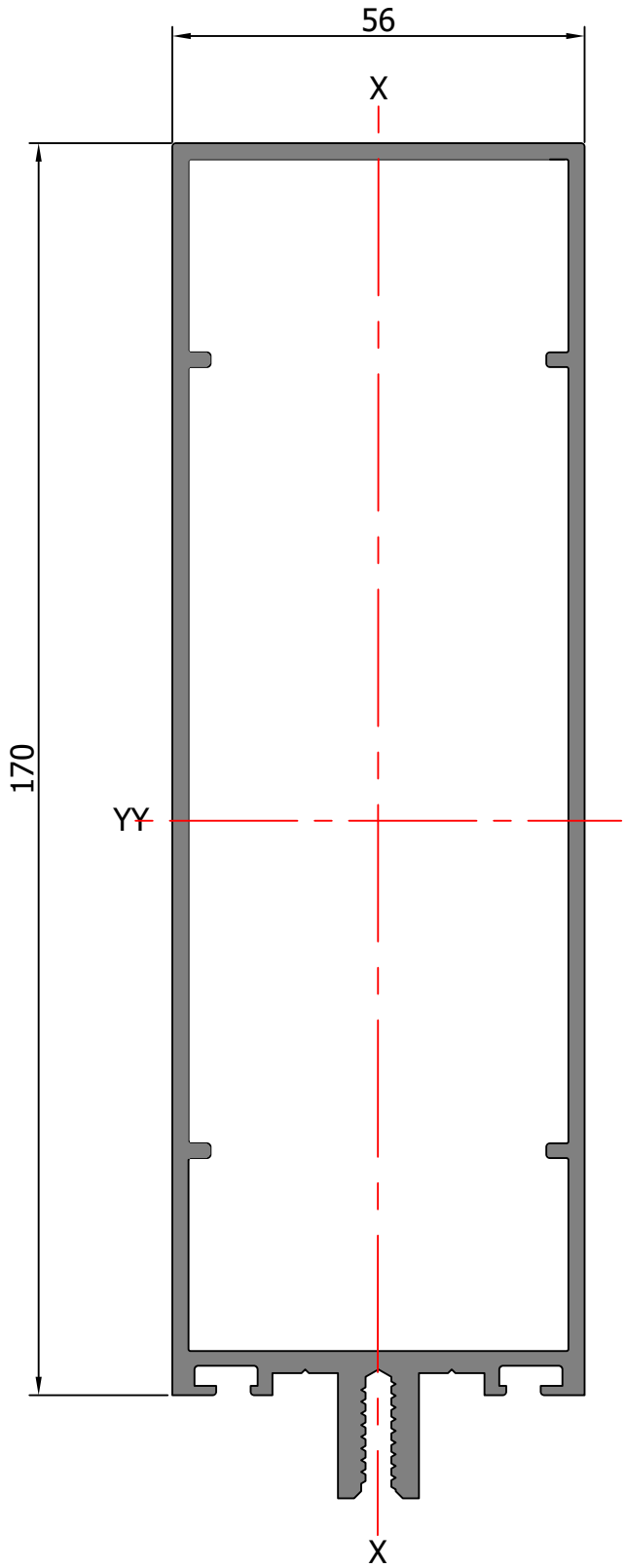


### 170mm Transom

| | |
|---|---|
| SECTIONB | R-T170 |
| AREA (sqmm) | 1170 |
| WEIGHT (kg/m) | 3.170 |
| O/S PERIM (mm) | 566 |
| Iyy ($cm^4$) | 454.9 |
| Ixx ($cm^4$) | 62.0 |

## Section15 - One Piece Transom

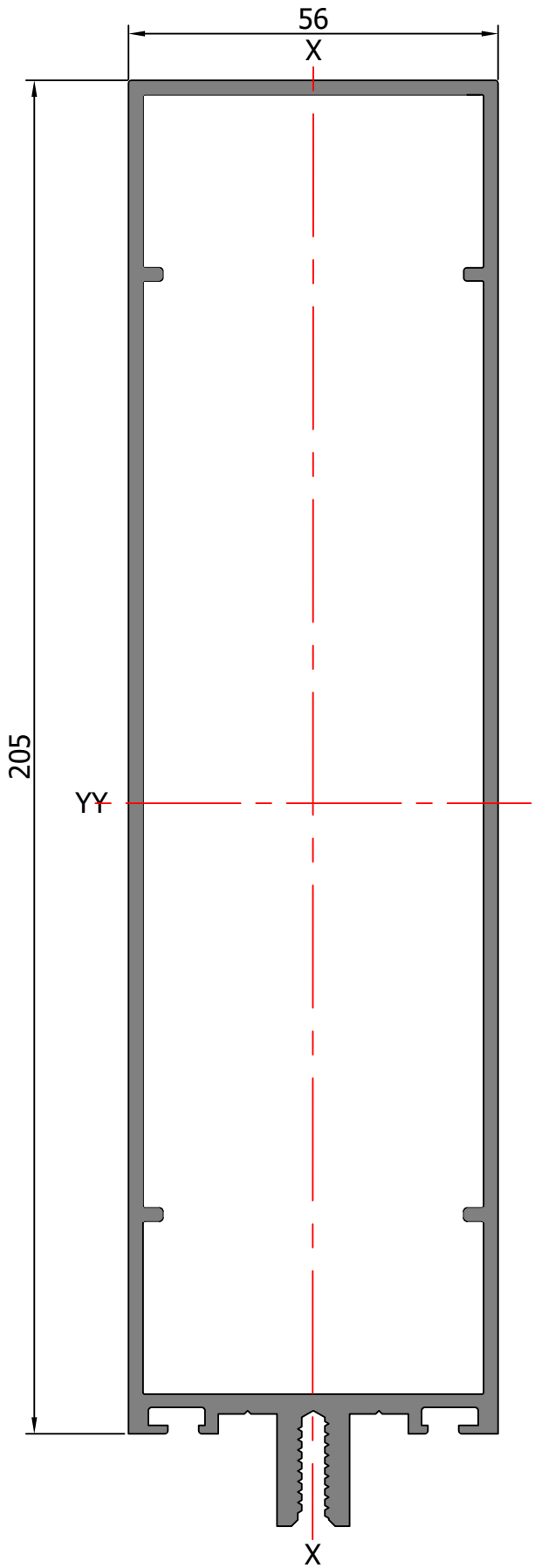


### 205mm Transom

| SECTIONB | R-T205 |
|---|---|
| AREA (sqmm) | 1324 |
| WEIGHT (kg/m) | 3.588 |
| O/S PERIM (mm) | 636 |
| Iyy ($cm^4$) | 720.8 |
| Ixx ($cm^4$) | 73.1 |

## Section16 - Two Piece Transom

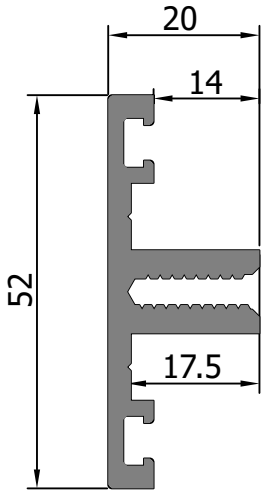


TRANSOM

| | |
|---|---|
| SECTION | BR-T1 |
| AREA (sqmm) | 298.1 |
| WEIGHT (kg/m) | 0.805 |
| O/S PERIM (mm) | 222 |

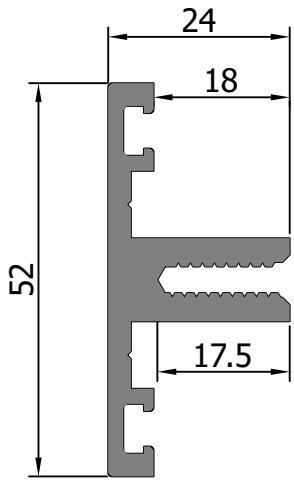


TRANSOM

| | |
|---|---|
| SECTION | BR-T4 |
| AREA (sqmm) | 342.1 |
| WEIGHT (kg/m) | 0.927 |
| O/S PERIM (mm) | 230 |

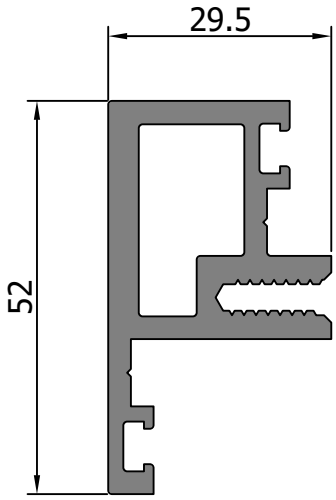


TRANSOM

| | |
|---|---|
| SECTION | BR-25008 |
| AREA (sqmm) | 476 |
| WEIGHT (kg/m) | 1.285 |
| O/S PERIM (mm) | 234.3 |

## Section16 - Two Piece Transom

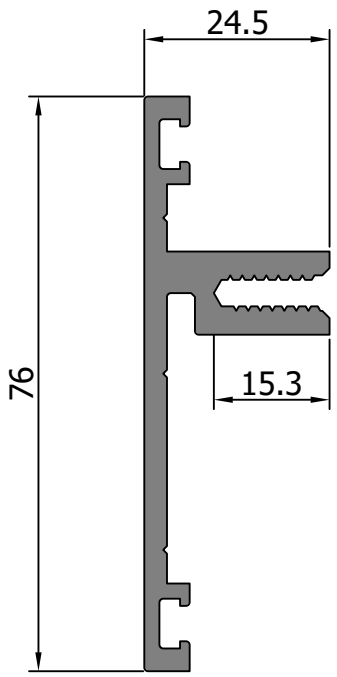


### TRANSOM

| | |
|---|---|
| SECTION | BR-T80 |
| AREA (sqmm) | 407.4 |
| WEIGHT (kg/m) | 1.100 |
| O/S PERIM (mm) | 283.2 |

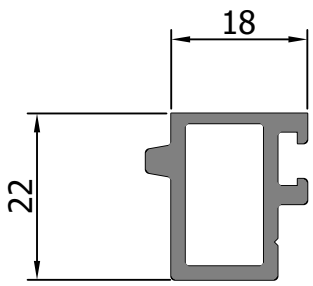


### SINGLE GLAZE ADAPTOR

| | |
|---|---|
| SECTION | BR-25014 |
| AREA (sqmm) | 145.7 |
| WEIGHT (kg/m) | 0.393 |
| O/S PERIM (mm) | 96.7 |

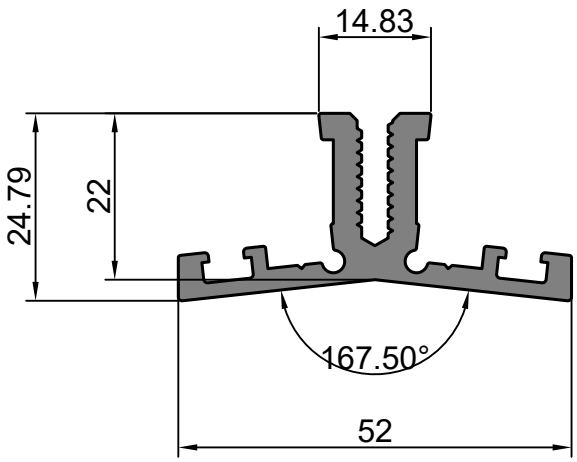


### ANGLED TRANSOM

| | |
|---|---|
| SECTION | BR-SKZ01 |
| AREA (sqmm) | 334.85 |
| WEIGHT (kg/m) | 0.904 |
| O/S PERIM (mm) | 238.28 |

## Section16 - Two Piece Transom

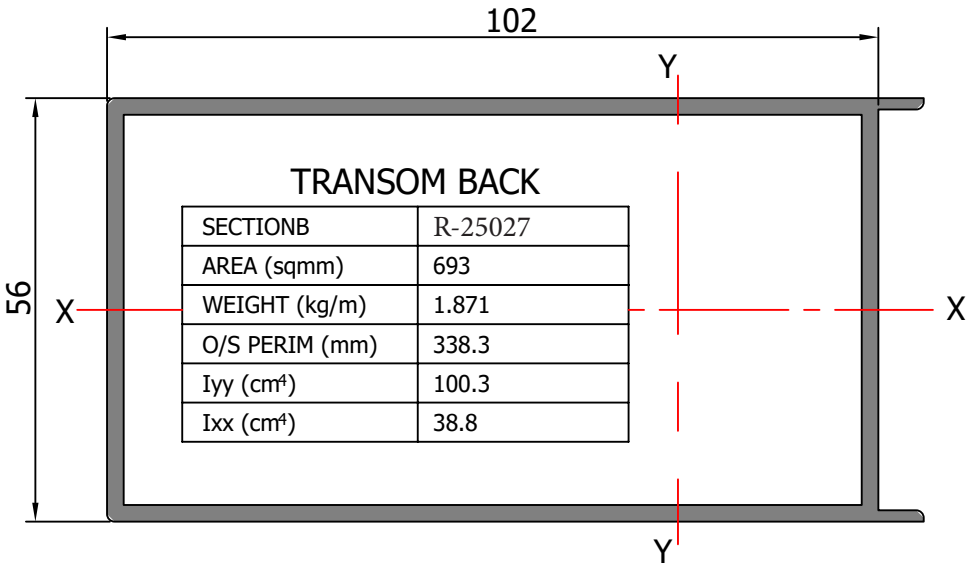


TRANSOM BACK

| | |
|---|---|
| SECTIONB | R-25027 |
| AREA (sqmm) | 693 |
| WEIGHT (kg/m) | 1.871 |
| O/S PERIM (mm) | 338.3 |
| Iyy ($cm^4$) | 100.3 |
| Ixx ($cm^4$) | 38.8 |

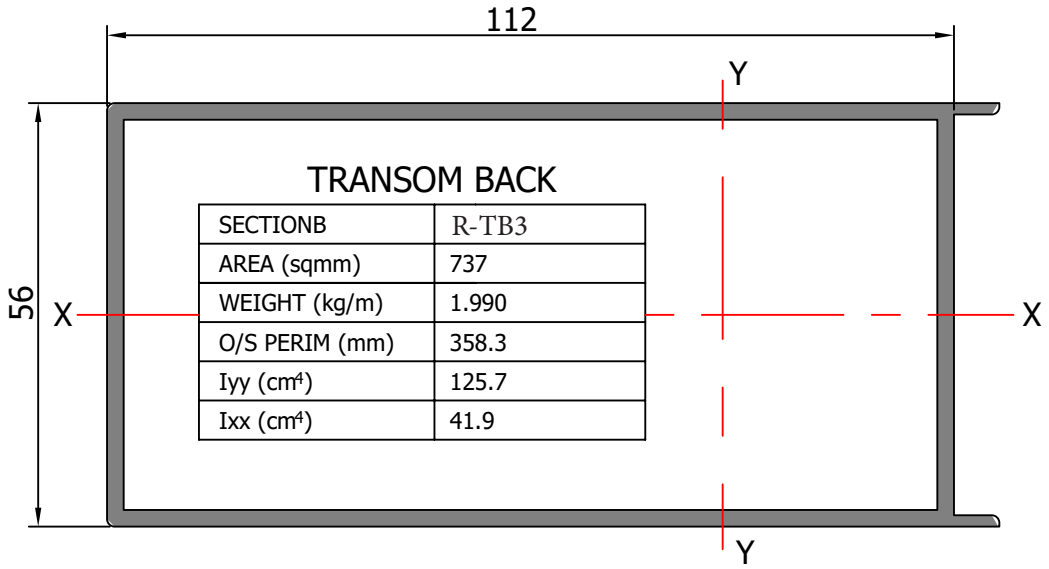


TRANSOM BACK

| | |
|---|---|
| SECTIONB | R-TB3 |
| AREA (sqmm) | 737 |
| WEIGHT (kg/m) | 1.990 |
| O/S PERIM (mm) | 358.3 |
| Iyy ($cm^4$) | 125.7 |
| Ixx ($cm^4$) | 41.9 |

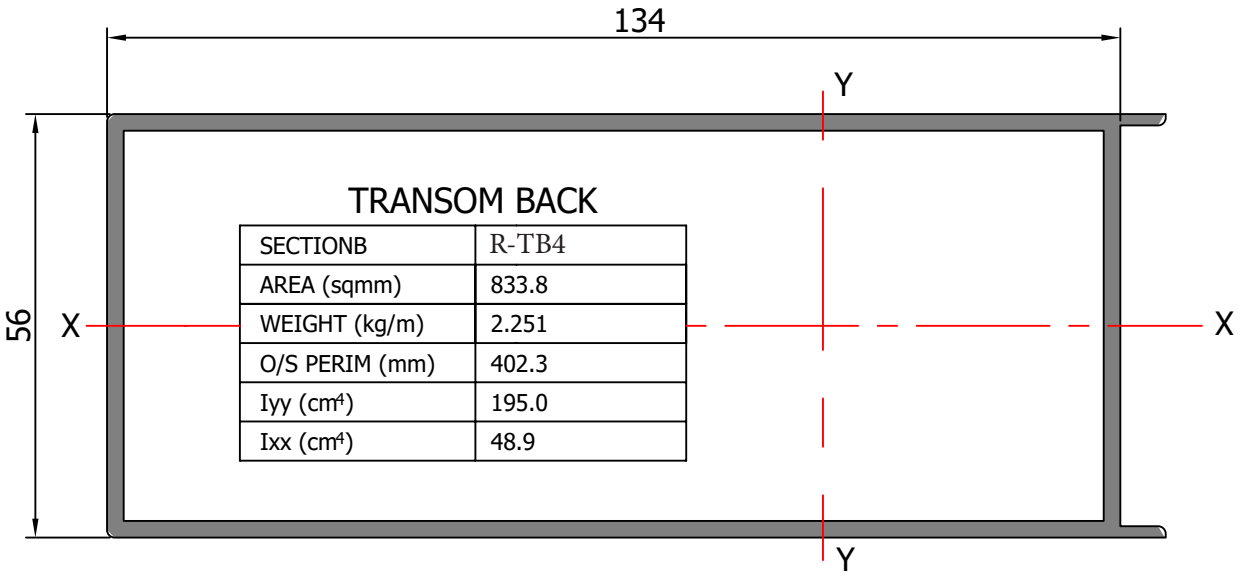


TRANSOM BACK

| | |
|---|---|
| SECTIONB | R-TB4 |
| AREA (sqmm) | 833.8 |
| WEIGHT (kg/m) | 2.251 |
| O/S PERIM (mm) | 402.3 |
| Iyy ($cm^4$) | 195.0 |
| Ixx ($cm^4$) | 48.9 |

## Section16 - Two Piece Transom

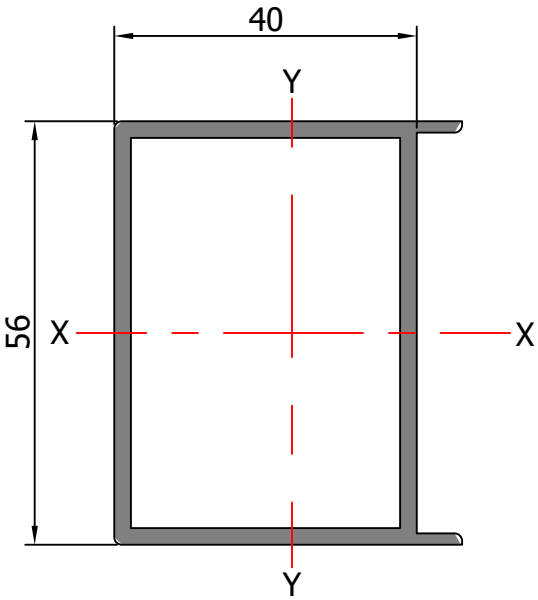


### TRANSOM BACK

| | |
|---|---|
| SECTIONB | R-25002 |
| AREA (sqmm) | 420.2 |
| WEIGHT (kg/m) | 1.134 |
| O/S PERIM (mm) | 214.3 |
| Iyy (cm⁴) | 11.3 |
| Ixx (cm⁴) | 19.0 |

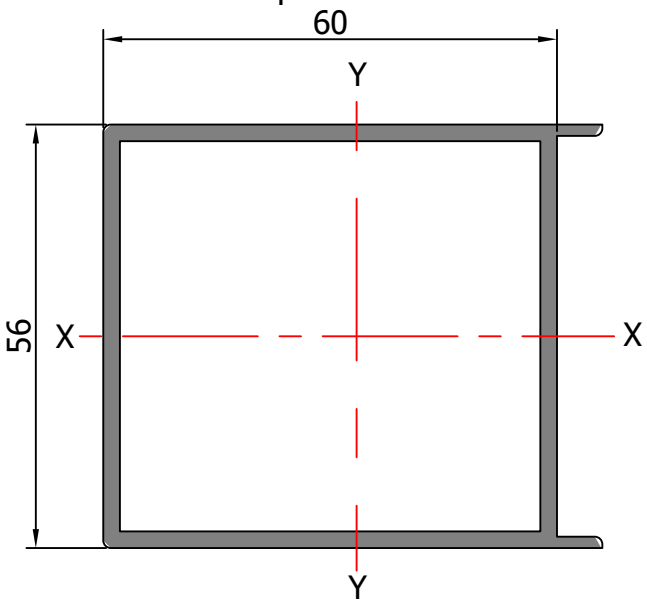


### TRANSOM BACK

| | |
|---|---|
| SECTIONB | R-25001 |
| AREA (sqmm) | 508.2 |
| WEIGHT (kg/m) | 1.372 |
| O/S PERIM (mm) | 254.3 |
| Iyy (cm⁴) | 28.7 |
| Ixx (cm⁴) | 25.4 |

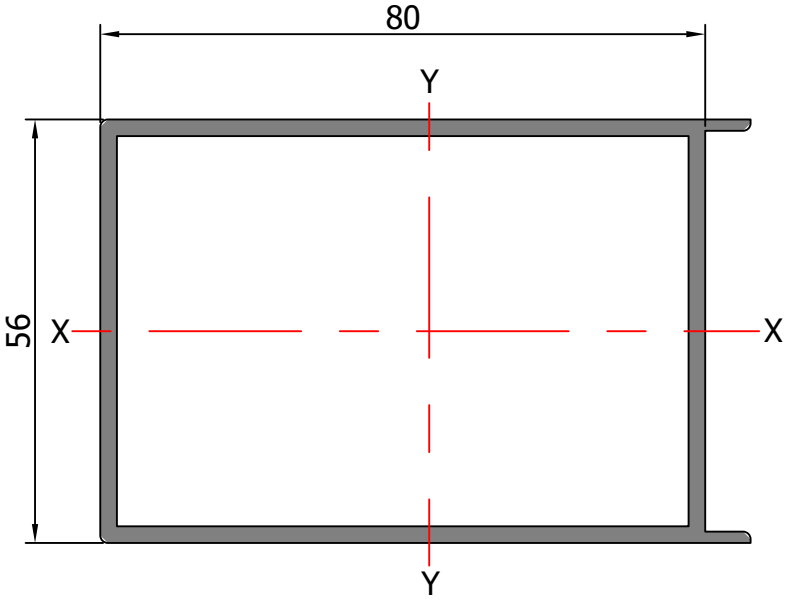


### TRANSOM BACK

| | |
|---|---|
| SECTIONB | R-TB1 |
| AREA (sqmm) | 596.2 |
| WEIGHT (kg/m) | 1.610 |
| O/S PERIM (mm) | 294.3 |
| Iyy (cm⁴) | 56.2 |
| Ixx (cm⁴) | 31.8 |

## Section16 - Two Piece Transom

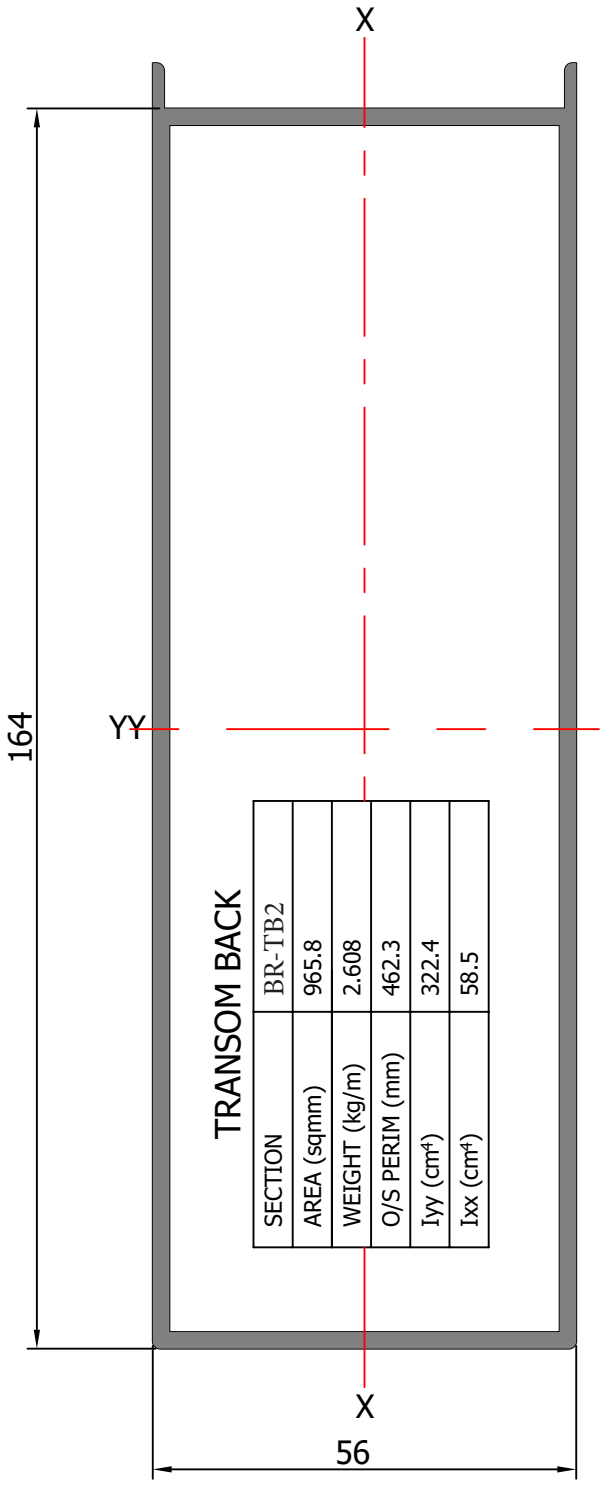


| SECTION | BR-TB2 |
|---|---|
| AREA (sqmm) | 965.8 |
| WEIGHT (kg/m) | 2.608 |
| O/S PERIM (mm) | 462.3 |
| Iyy ($cm^4$) | 322.4 |
| Ixx ($cm^4$) | 58.5 |

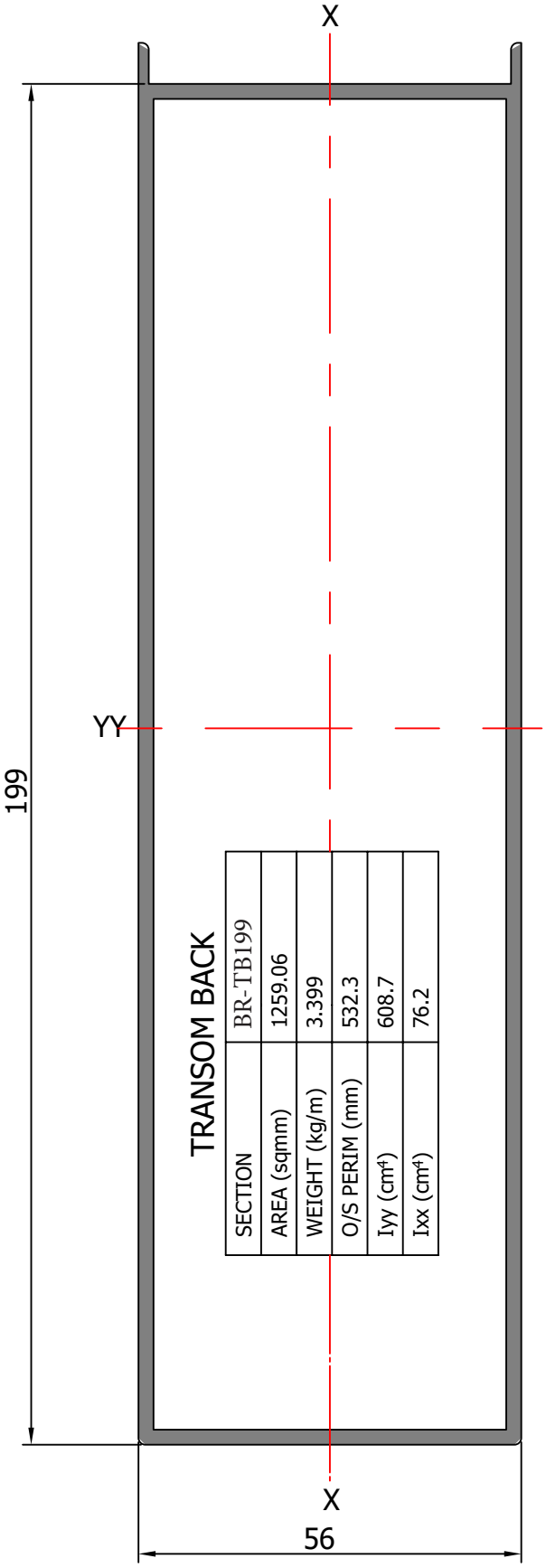


| SECTION | BR-TB199 |
|---|---|
| AREA (sqmm) | 1259.06 |
| WEIGHT (kg/m) | 3.399 |
| O/S PERIM (mm) | 532.3 |
| Iyy ($cm^4$) | 608.7 |
| Ixx ($cm^4$) | 76.2 |

## Section16 - Two Piece Transom

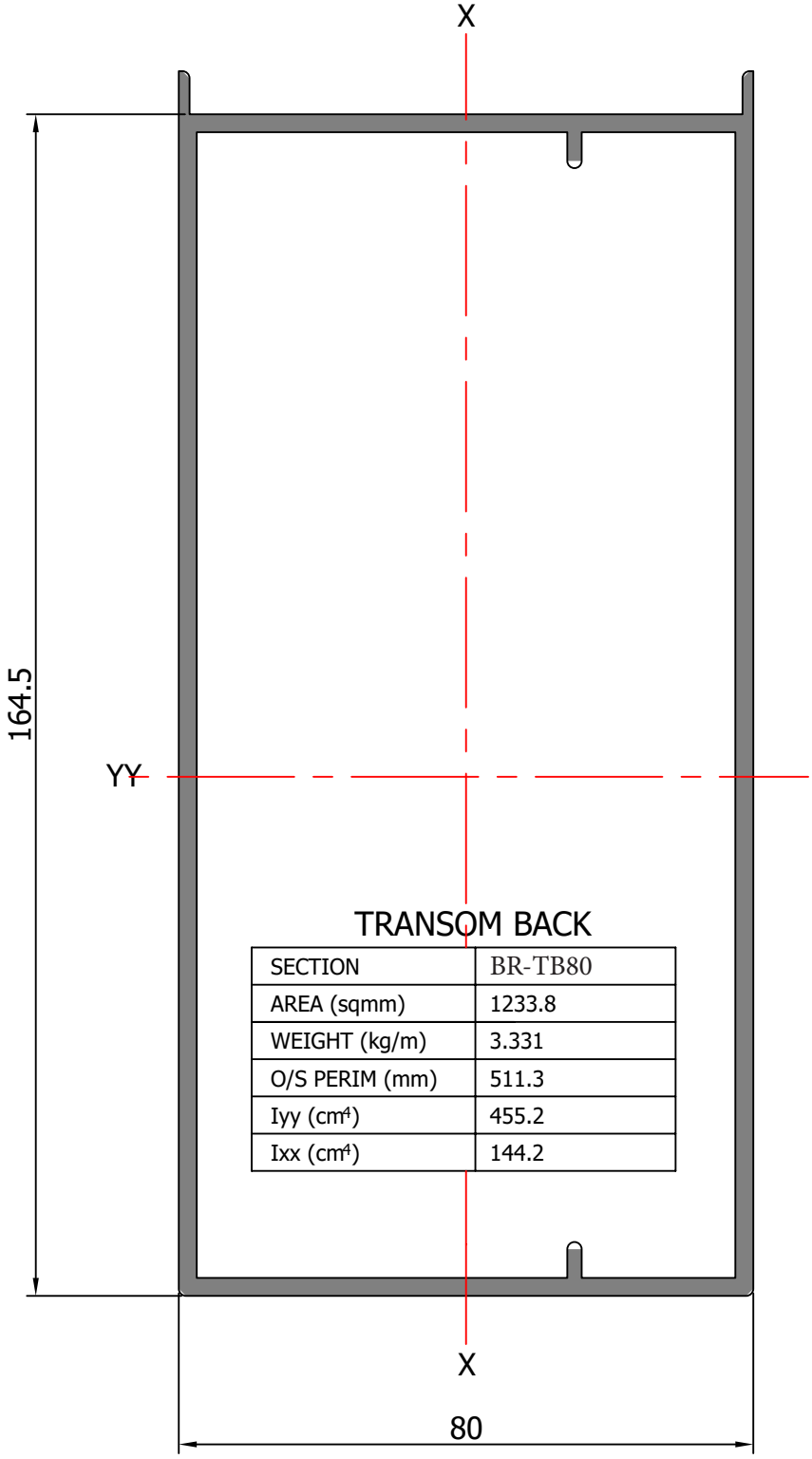


TRANSOM BACK

| | |
|---|---|
| SECTION | BR-TB80 |
| AREA (sqmm) | 1233.8 |
| WEIGHT (kg/m) | 3.331 |
| O/S PERIM (mm) | 511.3 |
| Iyy ($cm^4$) | 455.2 |
| Ixx ($cm^4$) | 144.2 |

## Section17 - Pressure Plate & Cover

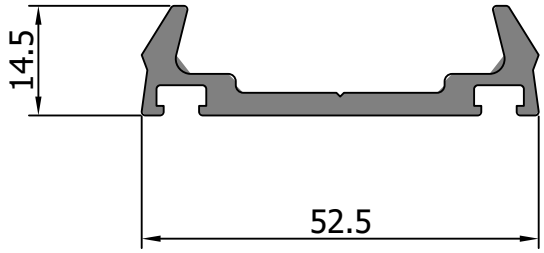


### PRESSURE PLATE

| | |
|---|---|
| SECTIONB | R-15002A |
| AREA (sqmm) | 233.7 |
| WEIGHT (kg/m) | 0.631 |
| O/S PERIM (mm) | 173 |

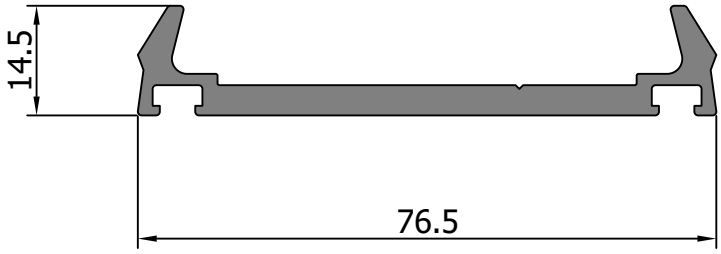


### PRESSURE PLATE

| | |
|---|---|
| SECTIONB | R-PP80 |
| AREA (sqmm) | 351.6 |
| WEIGHT (kg/m) | 0.949 |
| O/S PERIM (mm) | 220.26 |

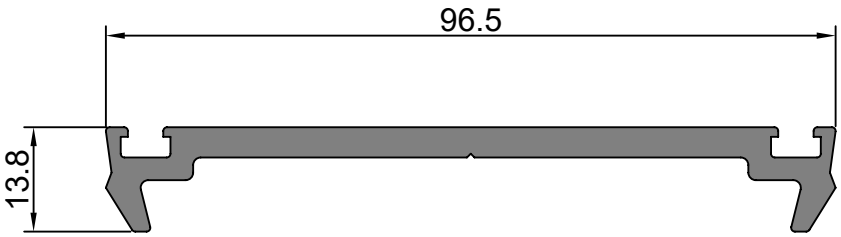


### PRESSURE PLATE

| | |
|---|---|
| SECTION | BR-TP100 |
| AREA (sqmm) | 451.34 |
| WEIGHT (kg/m) | 1.219 |
| O/S PERIM (mm) | 257.05 |

## Section17 - Pressure Plate & Cover

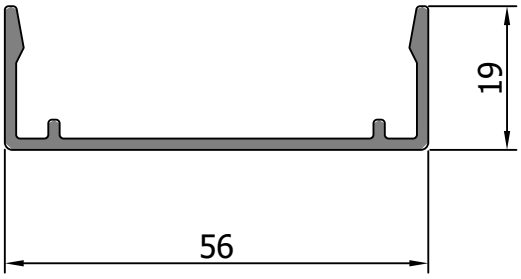


### MULLION CAP

| | |
|---|---|
| SECTIONB | R-15001 |
| AREA (sqmm) | 150.9 |
| WEIGHT (kg/m) | 0.408 |
| O/S PERIM (mm) | 191.9 |

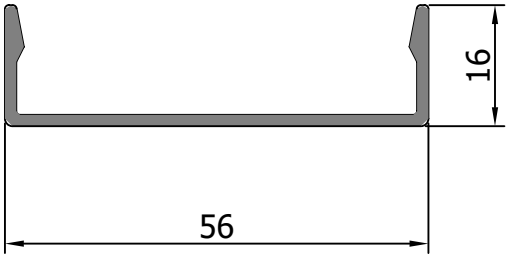


### TRANSOM CAP

| | |
|---|---|
| SECTIONB | R-15003 |
| AREA (sqmm) | 134.2 |
| WEIGHT (kg/m) | 0.363 |
| O/S PERIM (mm) | 171.6 |

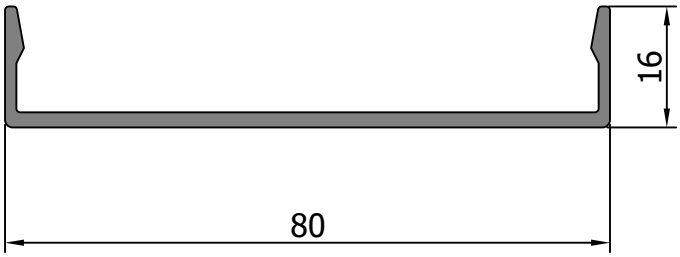


### MULLION/TRANSOM CAP

| | |
|---|---|
| SECTIONB | R-CP80 |
| AREA (sqmm) | 209 |
| WEIGHT (kg/m) | 0.564 |
| O/S PERIM (mm) | 218.7 |

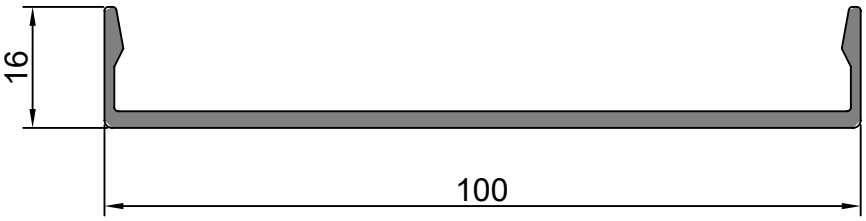


### MULLION/TRANSOM CAP

| | |
|---|---|
| SECTION | BR-TC100 |
| AREA (sqmm) | 265.96 |
| WEIGHT (kg/m) | 0.718 |
| O/S PERIM (mm) | 258.75 |

## Section17 - Pressure Plate & Cover

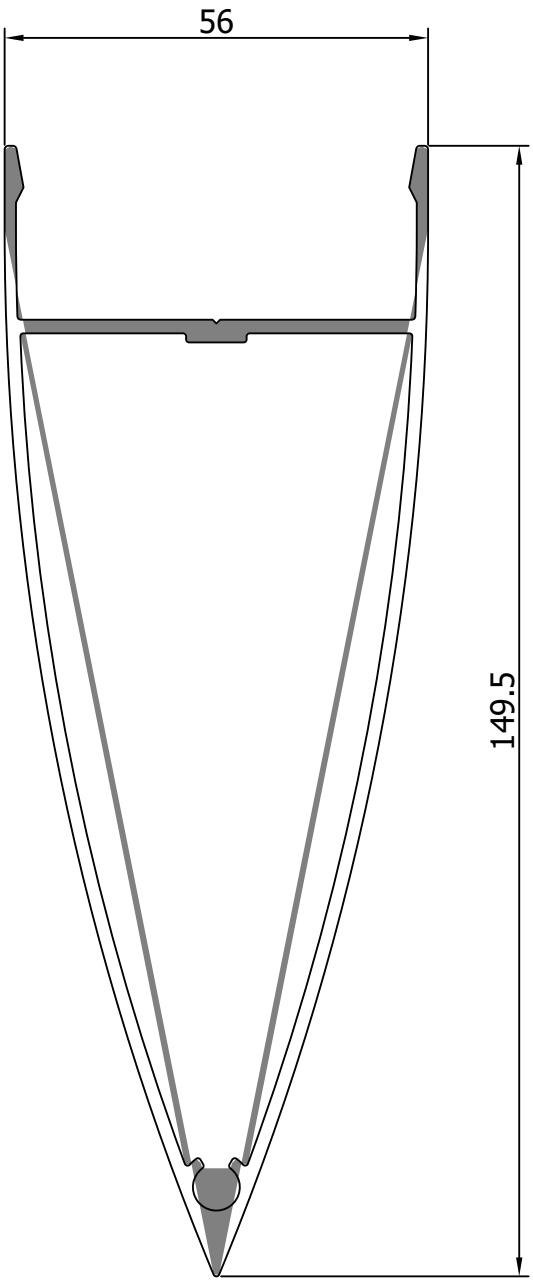


BULL NOSE CAP

| SECTION | BR-BN01 |
|---|---|
| AREA (sqmm) | 657.45 |
| WEIGHT (kg/m) | 1.775 |
| O/S PERIM (mm) | 408.3 |

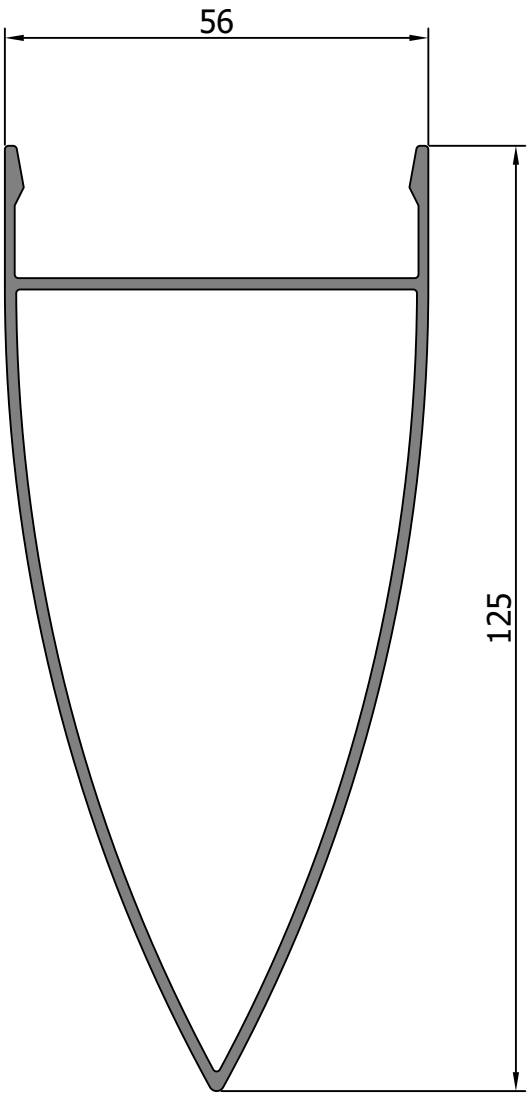


BULL NOSE CAP

| SECTION | BR-BN02 |
|---|---|
| AREA (sqmm) | 470 |
| WEIGHT (kg/m) | 1.268 |
| O/S PERIM (mm) | 351.3 |

## Section17 - Pressure Plate & Cover

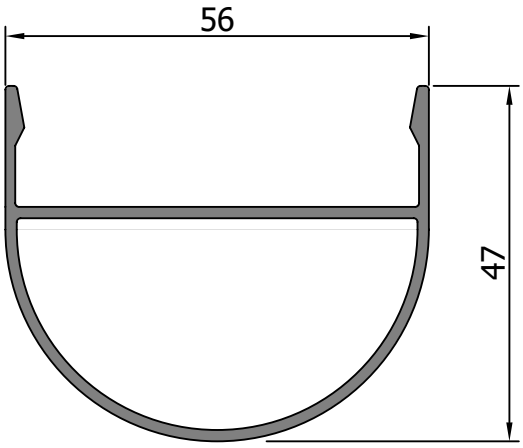


### BULL NOSE CAP

| | |
|---|---|
| SECTION | BR-BN03 |
| AREA (sqmm) | 272.45 |
| WEIGHT (kg/m) | 0.736 |
| O/S PERIM (mm) | 213.5 |

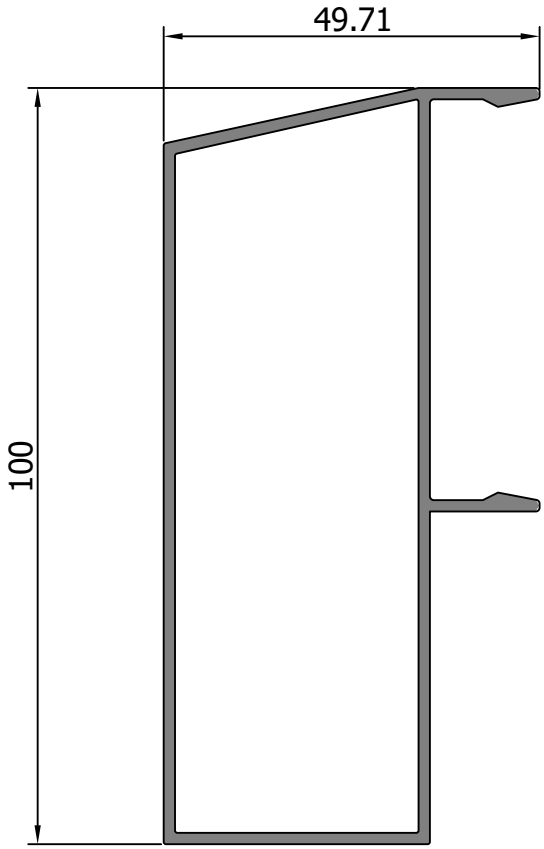


### SPECIAL BOX CAP

| | |
|---|---|
| SECTION | BR-BN04 |
| AREA (sqmm) | 437.64 |
| WEIGHT (kg/m) | 1.182 |
| O/S PERIM (mm) | 320.83 |

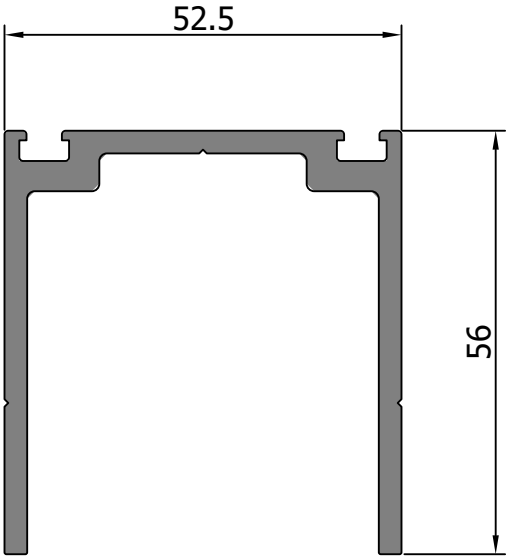


### RAINSCREEN PRESSURE PLATE

| | |
|---|---|
| SECTION | BR-RS1 |
| AREA (sqmm) | 522.6 |
| WEIGHT (kg/m) | 1.411 |
| O/S PERIM (mm) | 342.7 |

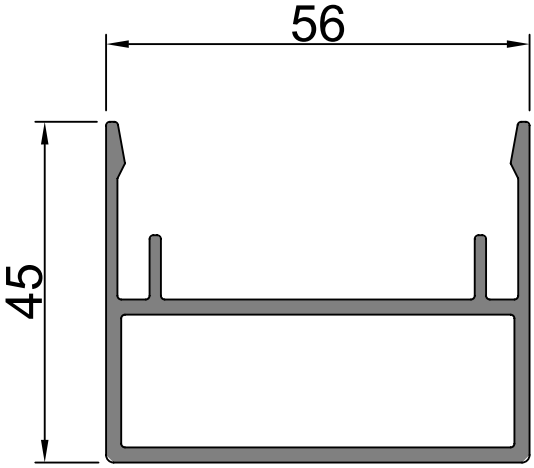


### BULL NOSE CAP

| | |
|---|---|
| SECTION | BR-BN05 |
| AREA (sqmm) | 397.46 |
| WEIGHT (kg/m) | 1.081 |
| O/S PERIM (mm) | 418.32 |

## Section17 - Pressure Plate & Cover

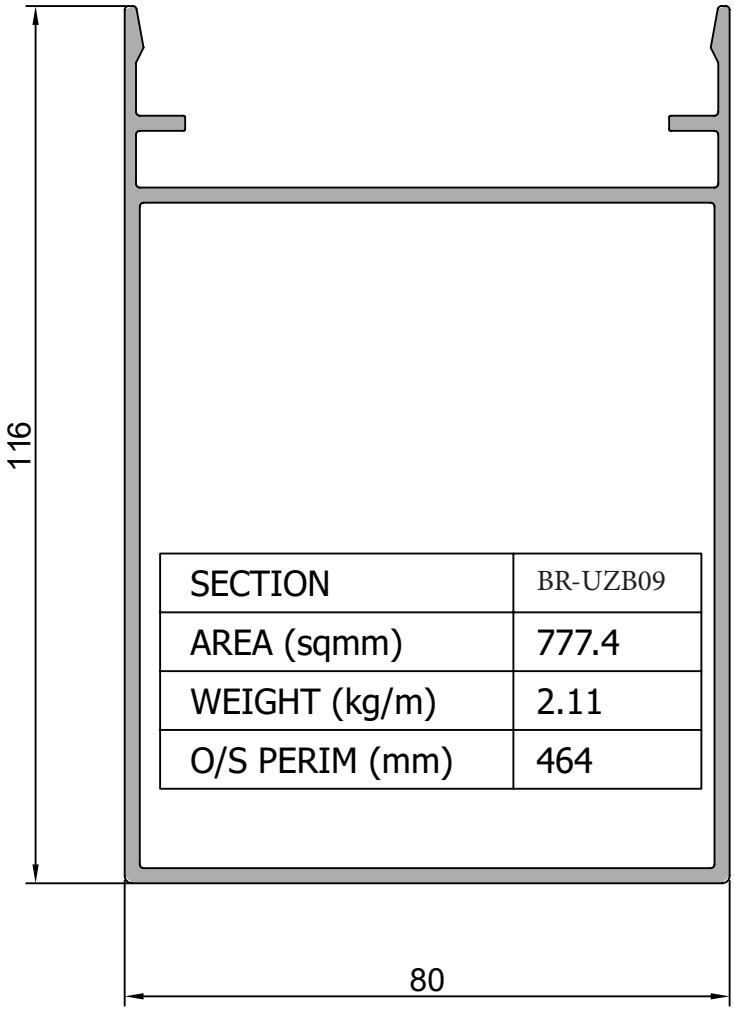


| SECTION | BR-UZB09 |
|---|---|
| AREA (sqmm) | 777.4 |
| WEIGHT (kg/m) | 2.11 |
| O/S PERIM (mm) | 464 |

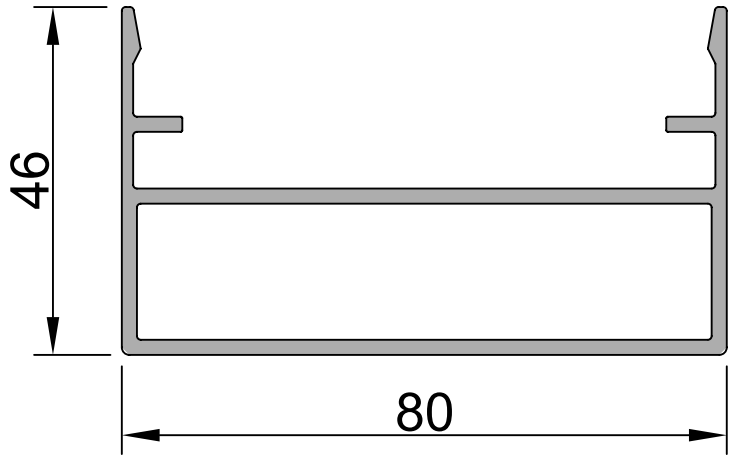


| SECTION | BR-UZB10 |
|---|---|
| AREA (sqmm) | 497.4 |
| WEIGHT (kg/m) | 1.35 |
| O/S PERIM (mm) | 324 |

## Section17 - Pressure Plate & Cover

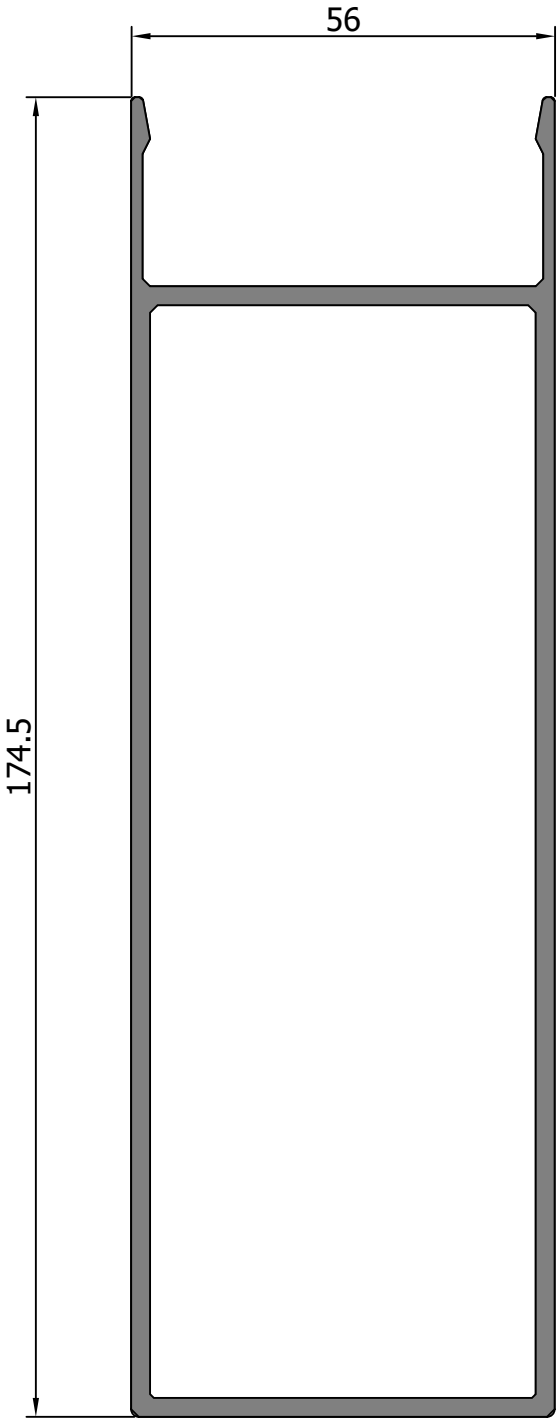


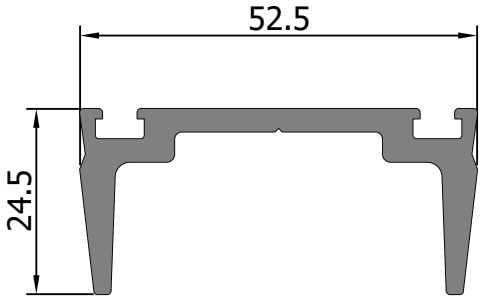


**THIS SECTION ONLY SUITABLE FOR USE WITH SECTION BR-BN06 & BS16**

| SECTION | BR-PP06 |
|---|---|
| AREA (sqmm) | 324.9 |
| WEIGHT (kg/m) | 0.88 |
| O/S PERIM (mm) | 210.4 |

| SECTION | BR-BN06 |
|---|---|
| AREA (sqmm) | 1089 |
| WEIGHT (kg/m) | 2.944 |
| O/S PERIM (mm) | 509 |

## Section17 - Pressure Plate & Cover

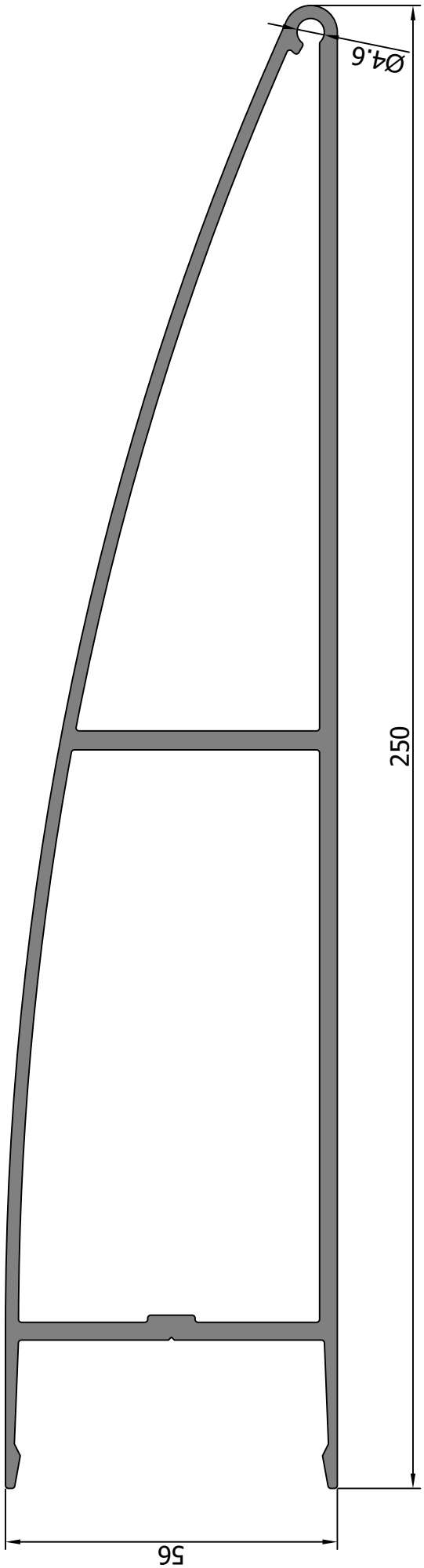


| | |
|---|---|
| SECTION | BR-BS16 |
| AREA (sqmm) | 1739.5 |
| WEIGHT (kg/m) | 4.696 |
| O/S PERIM (mm) | 616.4 |

## Section18 - Opening Vent Section and SG Carrier Frames

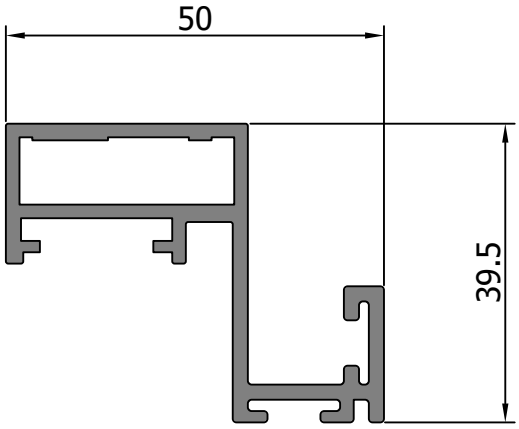


### VENT FRAME

| | |
|---|---|
| SECTIONB | R-VF1 |
| AREA (sqmm) | 337.9 |
| WEIGHT (kg/m) | 0.912 |
| O/S PERIM (mm) | 270.6 |

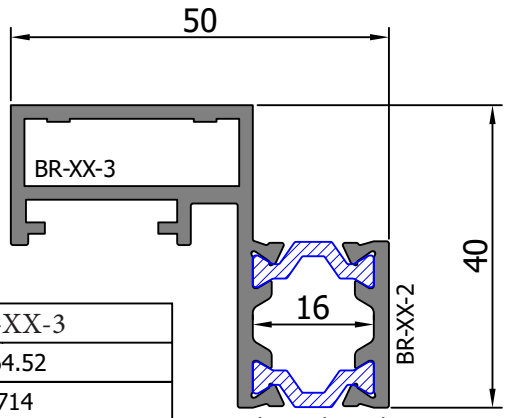


Thermal Break
219900

| | |
|---|---|
| SECTIONB | R-XX-3 |
| AREA (sqmm) | 264.52 |
| WEIGHT (kg/m) | 0.714 |
| O/S PERIM (mm) | 203.84 |

| | |
|---|---|
| SECTIONB | R-XX-2 |
| AREA (sqmm) | 70.03 |
| WEIGHT (kg/m) | 0.189 |
| O/S PERIM (mm) | 75.62 |

BR-03-16-02

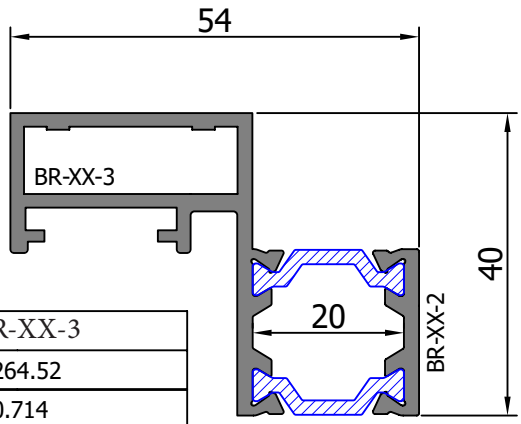


Thermal Break
246500

| | |
|---|---|
| SECTIONB | R-XX-3 |
| AREA (sqmm) | 264.52 |
| WEIGHT (kg/m) | 0.714 |
| O/S PERIM (mm) | 203.84 |

| | |
|---|---|
| SECTIONB | R-XX-2 |
| AREA (sqmm) | 70.03 |
| WEIGHT (kg/m) | 0.189 |
| O/S PERIM (mm) | 75.62 |

BR-03-20-02

## Section18 - Opening Vent Section and SG Carrier Frames

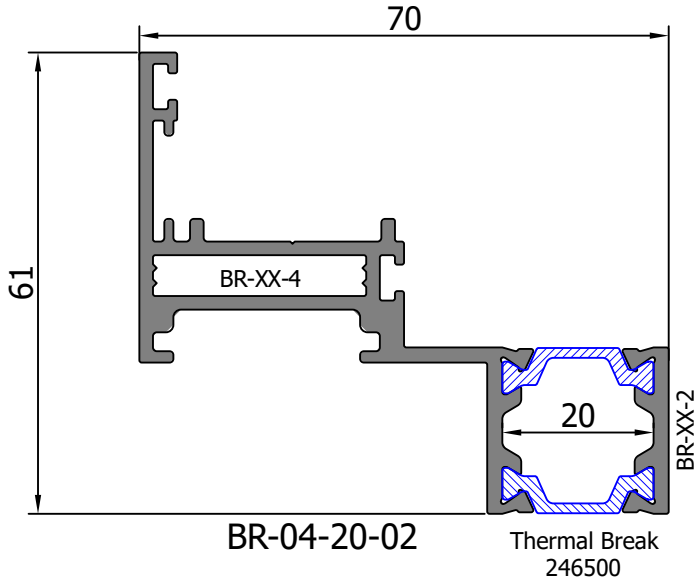


| SECTIONB | R-XX-4 |
|---|---|
| AREA (sqmm) | 372.77 |
| WEIGHT (kg/m) | 1.007 |
| O/S PERIM (mm) | 312.16 |

| SECTIONB | R-XX-2 |
|---|---|
| AREA (sqmm) | 70.03 |
| WEIGHT (kg/m) | 0.189 |
| O/S PERIM (mm) | 75.62 |

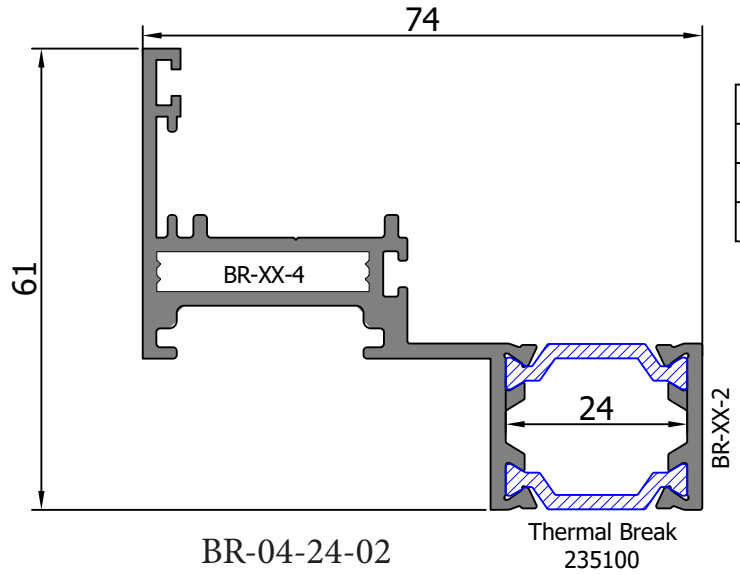


| SECTIONB | R-XX-4 |
|---|---|
| AREA (sqmm) | 372.77 |
| WEIGHT (kg/m) | 1.007 |
| O/S PERIM (mm) | 312.16 |

| SECTIONB | R-XX-2 |
|---|---|
| AREA (sqmm) | 70.03 |
| WEIGHT (kg/m) | 0.189 |
| O/S PERIM (mm) | 75.62 |

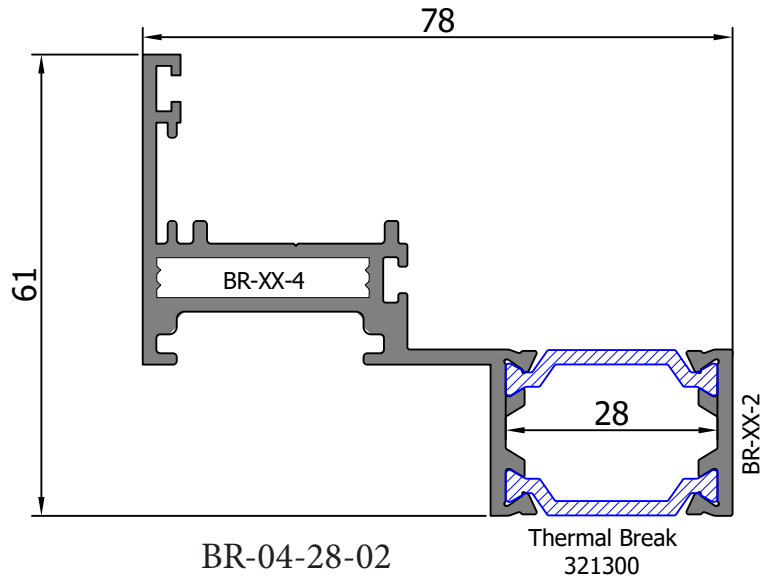


| SECTIONB | R-XX-4 |
|---|---|
| AREA (sqmm) | 372.77 |
| WEIGHT (kg/m) | 1.007 |
| O/S PERIM (mm) | 312.16 |

| SECTIONB | R-XX-2 |
|---|---|
| AREA (sqmm) | 70.03 |
| WEIGHT (kg/m) | 0.189 |
| O/S PERIM (mm) | 75.62 |

## Section18 - Opening Vent Section and SG Carrier Frames

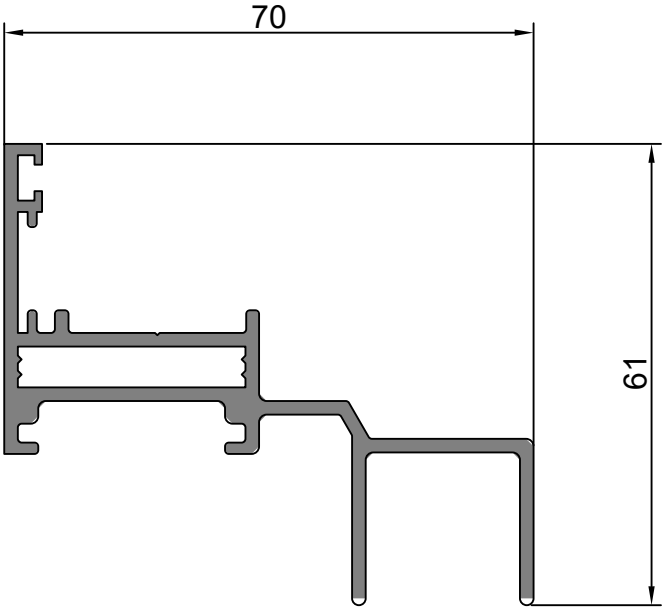


| SECTION | BR-25009A |
|---|---|
| AREA (sqmm) | 407.2 |
| WEIGHT (kg/m) | 1.106 |
| O/S PERIM (mm) | 363.86 |

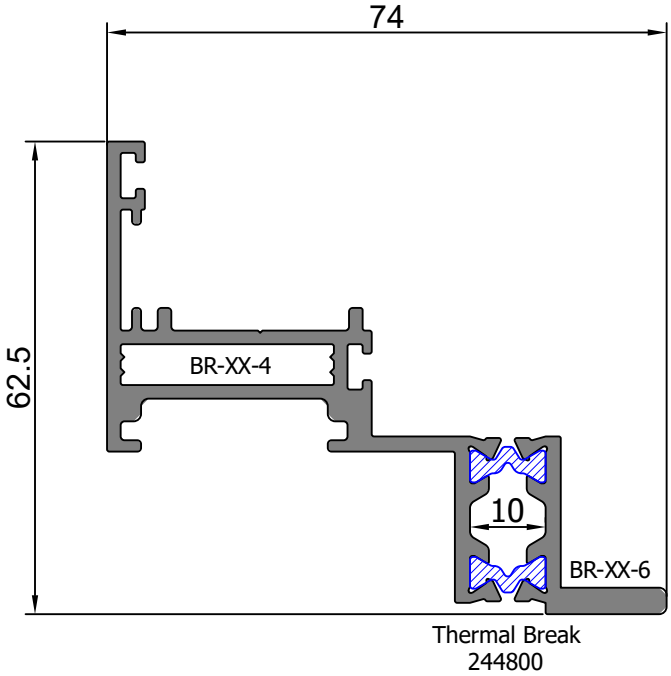


BR-04-10-06

| SECTIONB | R-XX-4 |
|---|---|
| AREA (sqmm) | 372.77 |
| WEIGHT (kg/m) | 1.007 |
| O/S PERIM (mm) | 312.16 |

| SECTIONB | R-XX-6 |
|---|---|
| AREA (sqmm) | 121.62 |
| WEIGHT (kg/m) | 0.328 |
| O/S PERIM (mm) | 105.80 |

## Section18 - Opening Vent Section and SG Carrier Frames

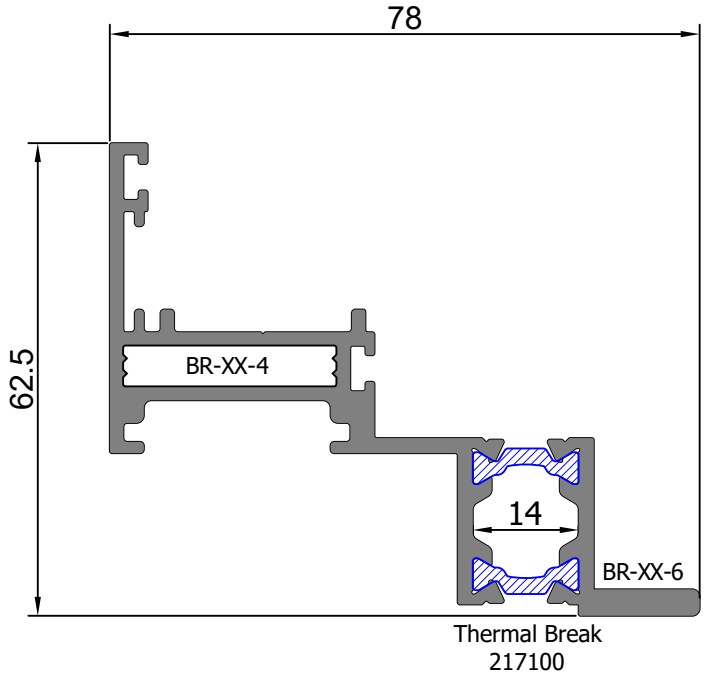


BR-04-14-06

| SECTIONB | R-XX-4 |
|---|---|
| AREA (sqmm) | 372.77 |
| WEIGHT (kg/m) | 1.007 |
| O/S PERIM (mm) | 312.16 |

| SECTIONB | R-XX-6 |
|---|---|
| AREA (sqmm) | 121.62 |
| WEIGHT (kg/m) | 0.328 |
| O/S PERIM (mm) | 105.80 |

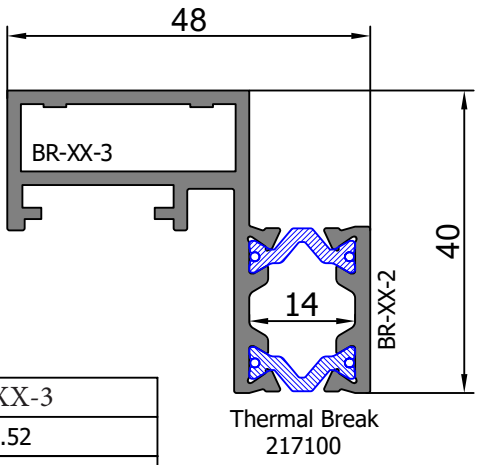


BR-03-14-02

| SECTIONB | R-XX-3 |
|---|---|
| AREA (sqmm) | 264.52 |
| WEIGHT (kg/m) | 0.714 |
| O/S PERIM (mm) | 203.84 |

| SECTIONB | R-XX-2 |
|---|---|
| AREA (sqmm) | 70.03 |
| WEIGHT (kg/m) | 0.189 |
| O/S PERIM (mm) | 75.62 |

## Section18 - Opening Vent Section and SG Carrier Frames

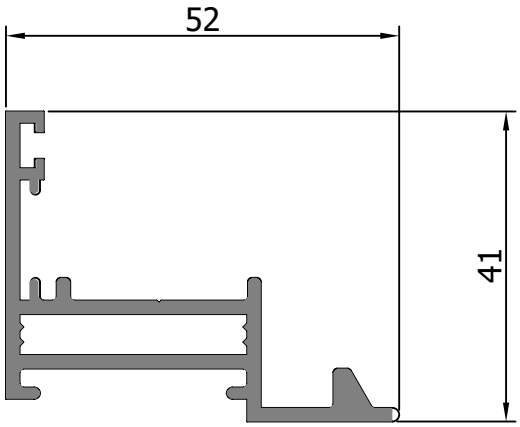


### VENT OUTER FRAME

| | |
|---|---|
| SECTION | BR-25012A |
| AREA (sqmm) | 294.5 |
| WEIGHT (kg/m) | 0.801 |
| O/S PERIM (mm) | 246.8 |

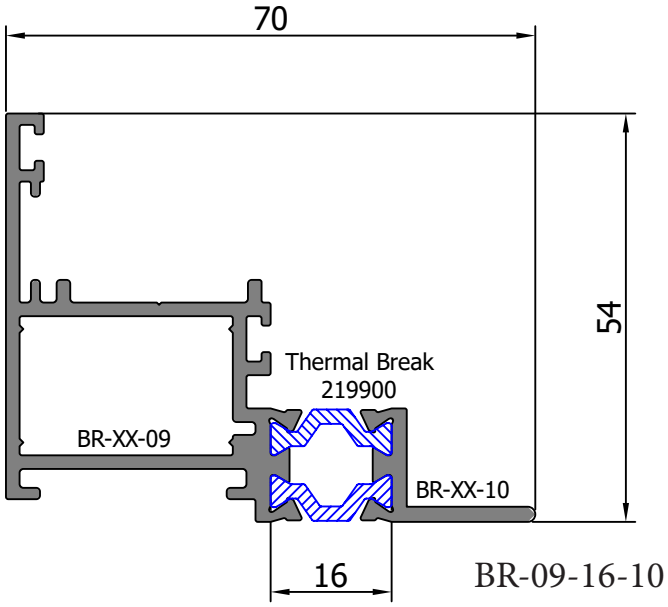


| | |
|---|---|
| SECTION | BR-XX-09 |
| AREA (sqmm) | 346.78 |
| WEIGHT (kg/m) | 0.936 |
| O/S PERIM (mm) | 272.18 |

| | |
|---|---|
| SECTION | BR-XX-10 |
| AREA (sqmm) | 86.44 |
| WEIGHT (kg/m) | 0.233 |
| O/S PERIM (mm) | 92.33 |

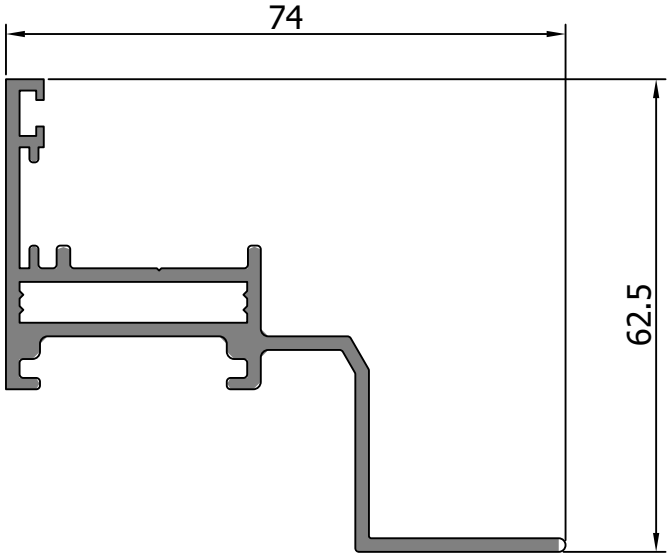


### VENT OUTER FRAME

| | |
|---|---|
| SECTION | BR-VF2 |
| AREA (sqmm) | 381.6 |
| WEIGHT (kg/m) | 1.032 |
| O/S PERIM (mm) | 336.54 |

## Section18 - Opening Vent Section and SG Carrier Frames

### CARRIER FRAME

| | |
|---|---|
| SECTION | BR-25011A |
| AREA (sqmm) | 251.6 |
| WEIGHT (kg/m) | 0.679 |
| O/S PERIM (mm) | 167.4 |

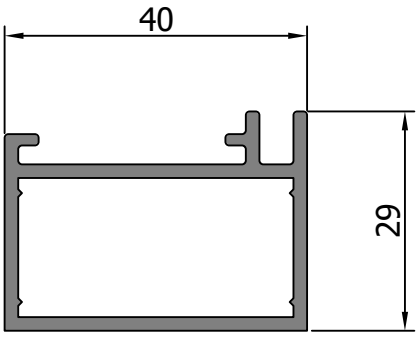


### RETAINING CLIP

| | |
|---|---|
| SECTION | BR-15009 |
| AREA (sqmm) | 128.55 |
| WEIGHT (kg/m) | 0.347 |
| O/S PERIM (mm) | 169.28 |

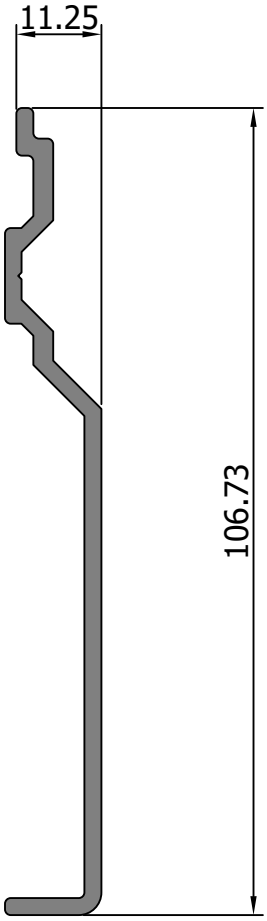

## Section18 - Opening Vent Section and SG Carrier Frames

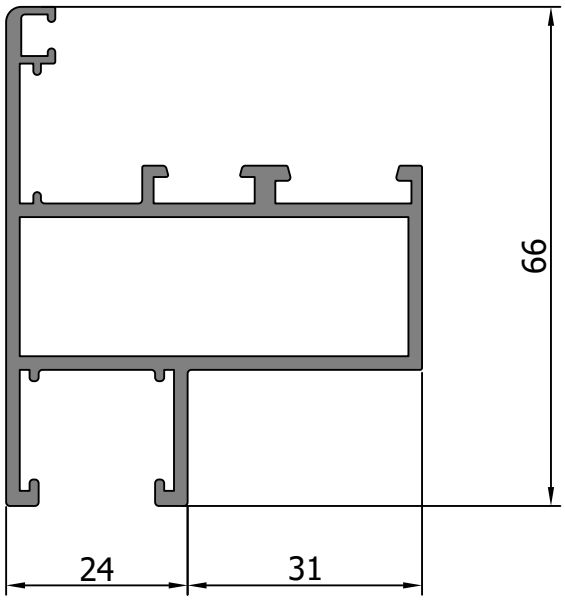


### CURTAIN WALL OUTER FRAME

| | |
|---|---|
| SECTIONB | R-TT87 |
| AREA (sqmm) | 447.6 |
| WEIGHT (kg/m) | 1.208 |
| O/S PERIM (mm) | 364.9 |

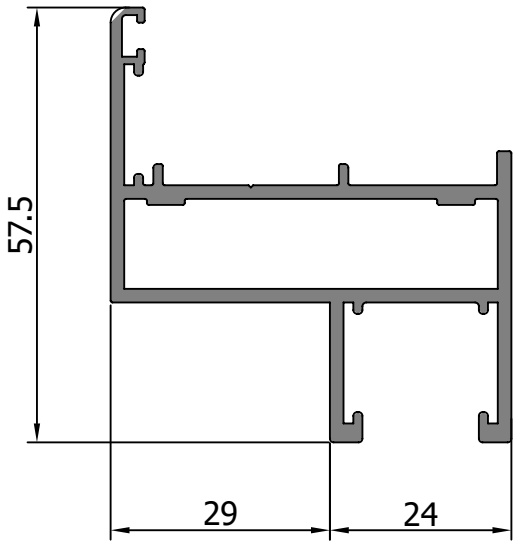


### CURTAIN WALL OUTER FRAME

| | |
|---|---|
| SECTIONB | R-TT91 |
| AREA (sqmm) | 393 |
| WEIGHT (kg/m) | 1.063 |
| O/S PERIM (mm) | 314.6 |

## Section18 - Opening Vent Section and SG Carrier Frames

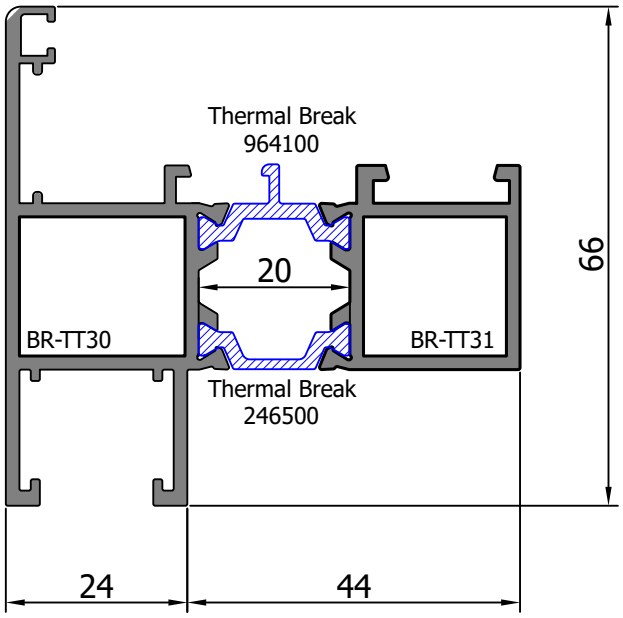


BR-TT30-20-31

| SECTIONB | R-TT30 |
|---|---|
| AREA (sqmm) | 339.5 |
| WEIGHT (kg/m) | 0.920 |
| O/S PERIM (mm) | 310.45 |

| SECTIONB | R-TT31 |
|---|---|
| AREA (sqmm) | 199.2 |
| WEIGHT (kg/m) | 0.536 |
| O/S PERIM (mm) | 143.36 |

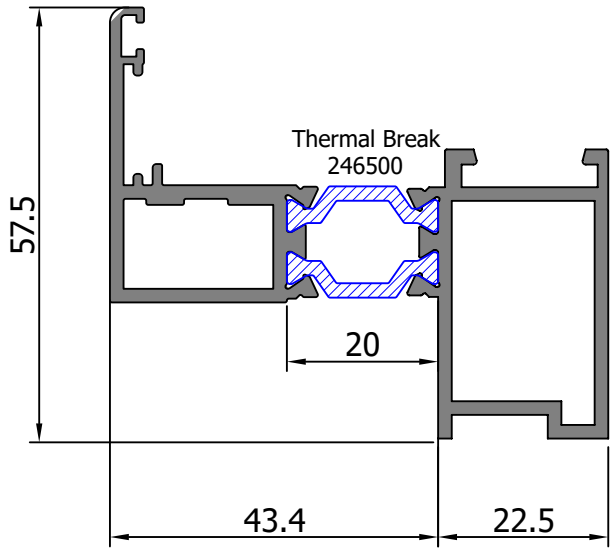


BR-TT61-20-92

| SECTIONB | R-TT61 |
|---|---|
| AREA (sqmm) | 213.9 |
| WEIGHT (kg/m) | 0.575 |
| O/S PERIM (mm) | 173.67 |

| SECTIONB | R-TT92 |
|---|---|
| AREA (sqmm) | 241.3 |
| WEIGHT (kg/m) | 0.653 |
| O/S PERIM (mm) | 170.77 |

## Section18 - Opening Vent Section and SG Carrier Frames

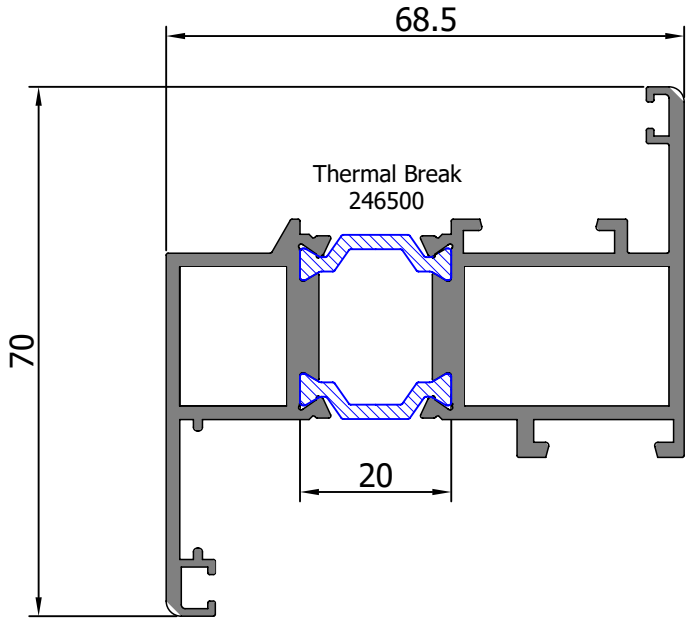


BR-TT12-20-11

| SECTIONB | R-TT12 |
|---|---|
| AREA (sqmm) | 229.05 |
| WEIGHT (kg/m) | 0.618 |
| O/S PERIM (mm) | 191.3 |

| SECTION | BR-TT11 |
|---|---|
| AREA (sqmm) | 307.62 |
| WEIGHT (kg/m) | 0.831 |
| O/S PERIM (mm) | 244.77 |

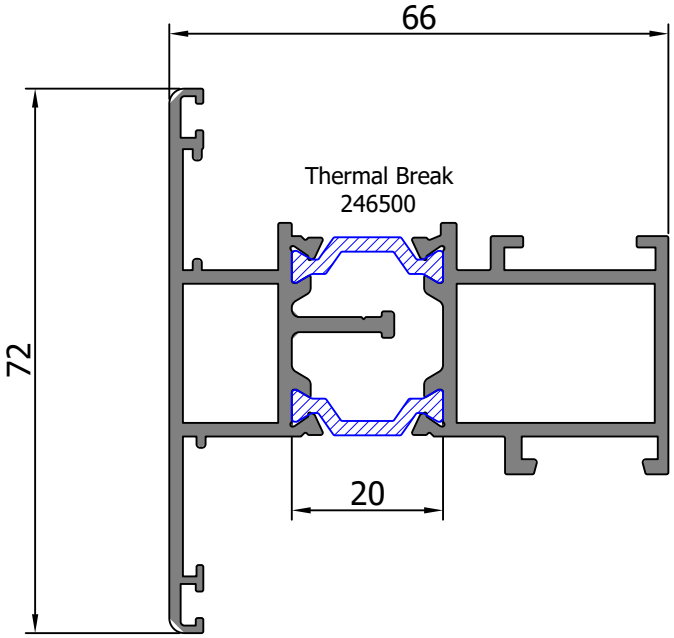


BR-TT62-20-63

| SECTIONB | R-TT62 |
|---|---|
| AREA (sqmm) | 299.16 |
| WEIGHT (kg/m) | 0.808 |
| O/S PERIM (mm) | 283.13 |

| SECTION | BR-TT63 |
|---|---|
| AREA (sqmm) | 259.84 |
| WEIGHT (kg/m) | 0.702 |
| O/S PERIM (mm) | 197.28 |

## Section18 - Opening Vent Section and SG Carrier Frames

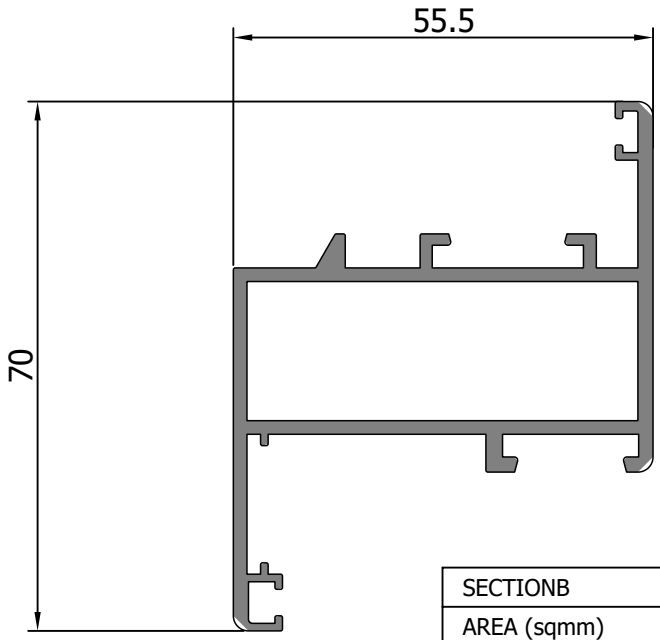


| SECTIONB | R-TT24 |
|---|---|
| AREA (sqmm) | 441.90 |
| WEIGHT (kg/m) | 1.193 |
| O/S PERIM (mm) | 350.65 |

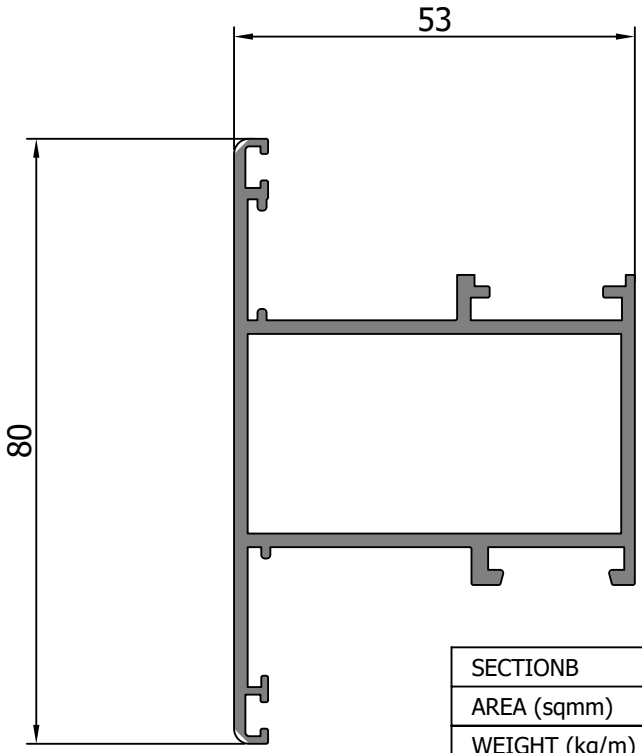


| SECTIONB | R-TT74 |
|---|---|
| AREA (sqmm) | 446.16 |
| WEIGHT (kg/m) | 1.205 |
| O/S PERIM (mm) | 363.70 |

## Section18 - Opening Vent Section and SG Carrier Frames

| SECTIONB | R-XX-7 |
|---|---|
| AREA (sqmm) | 498 |
| WEIGHT (kg/m) | 1.35 |
| O/S PERIM (mm) | 399 |

| SECTIONB | R-XX-2 |
|---|---|
| AREA (sqmm) | 70.03 |
| WEIGHT (kg/m) | 0.189 |
| O/S PERIM (mm) | 75.62 |

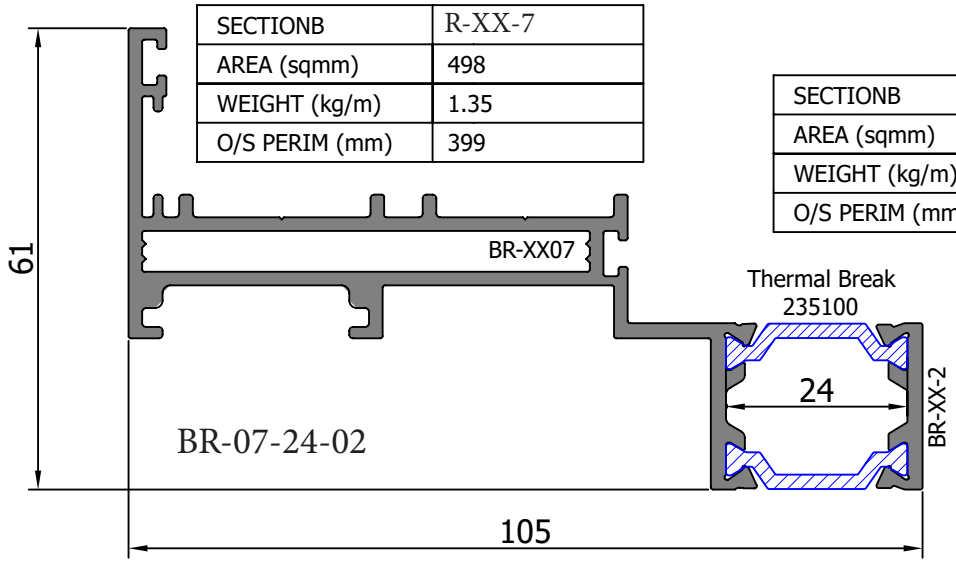


| SECTIONB | R-XX-7 |
|---|---|
| AREA (sqmm) | 498 |
| WEIGHT (kg/m) | 1.35 |
| O/S PERIM (mm) | 399 |

| SECTIONB | R-XX-6 |
|---|---|
| AREA (sqmm) | 121.62 |
| WEIGHT (kg/m) | 0.328 |
| O/S PERIM (mm) | 105.80 |

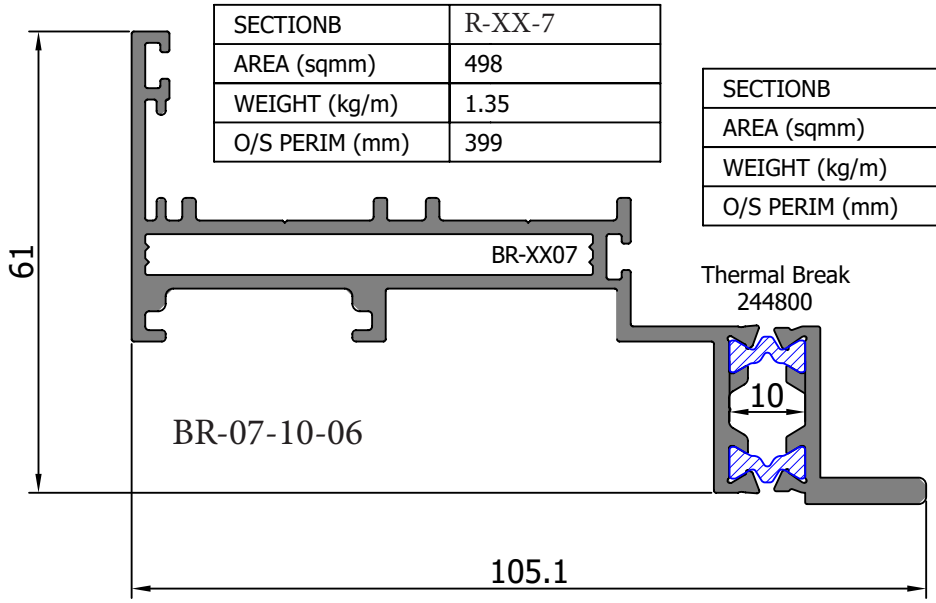

## Section18 - Opening Vent Section and SG Carrier Frames

| SECTIONB | R-XX-8 |
|---|---|
| AREA (sqmm) | 408.3 |
| WEIGHT (kg/m) | 1.106 |
| O/S PERIM (mm) | 269.2 |

| SECTIONB | R-XX-2 |
|---|---|
| AREA (sqmm) | 70.03 |
| WEIGHT (kg/m) | 0.189 |
| O/S PERIM (mm) | 75.62 |

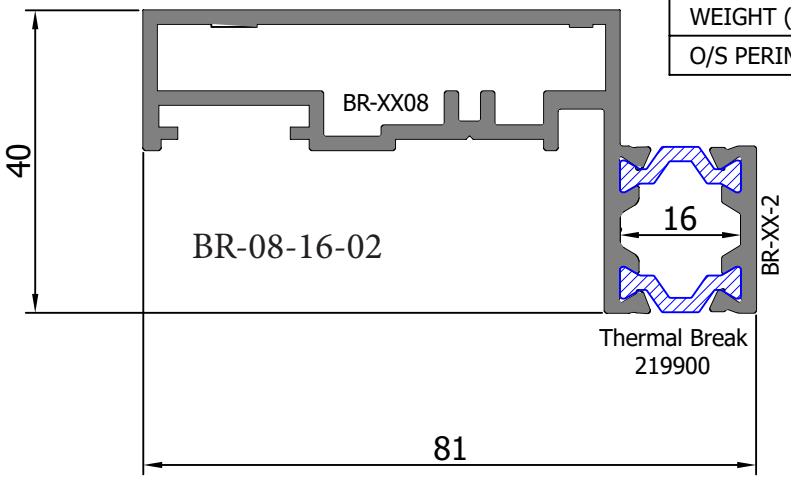

## Section18 - Opening Vent Section and SG Carrier Frames

Vent section for use with 34mm Glazing (6-20-8)

| SECTIONB | R-XX-7 |
|---|---|
| AREA (sqmm) | 498 |
| WEIGHT (kg/m) | 1.35 |
| O/S PERIM (mm) | 399 |

| SECTIONB | R-XX-2 |
|---|---|
| AREA (sqmm) | 70.03 |
| WEIGHT (kg/m) | 0.189 |
| O/S PERIM (mm) | 75.62 |

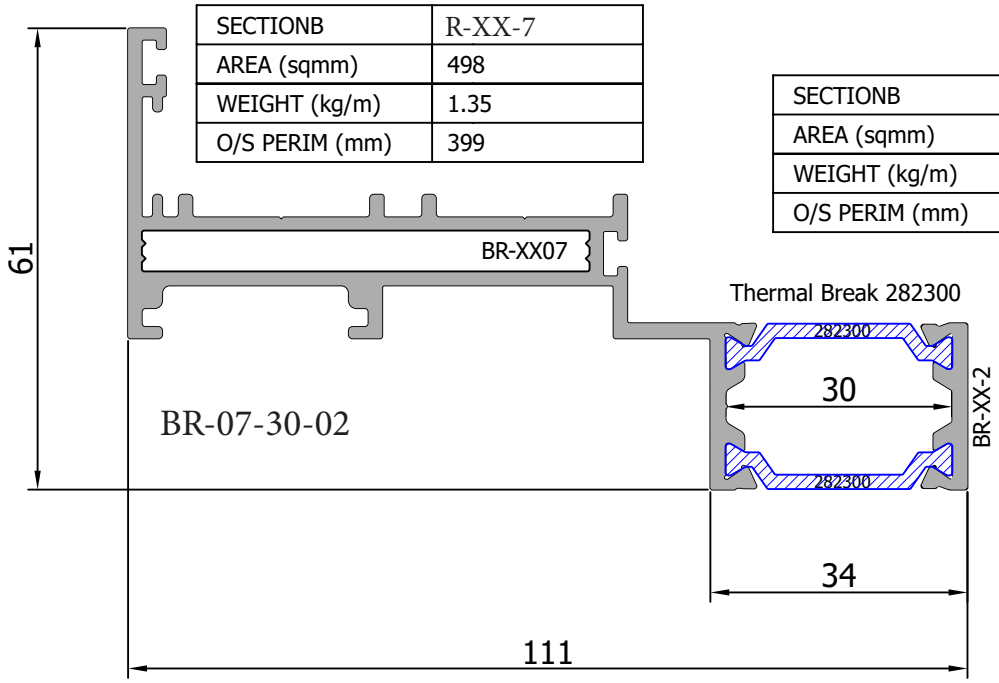


| SECTIONB | R-XX-8 |
|---|---|
| AREA (sqmm) | 408.3 |
| WEIGHT (kg/m) | 1.106 |
| O/S PERIM (mm) | 269.2 |

| SECTIONB | R-XX-2 |
|---|---|
| AREA (sqmm) | 70.03 |
| WEIGHT (kg/m) | 0.189 |
| O/S PERIM (mm) | 75.62 |

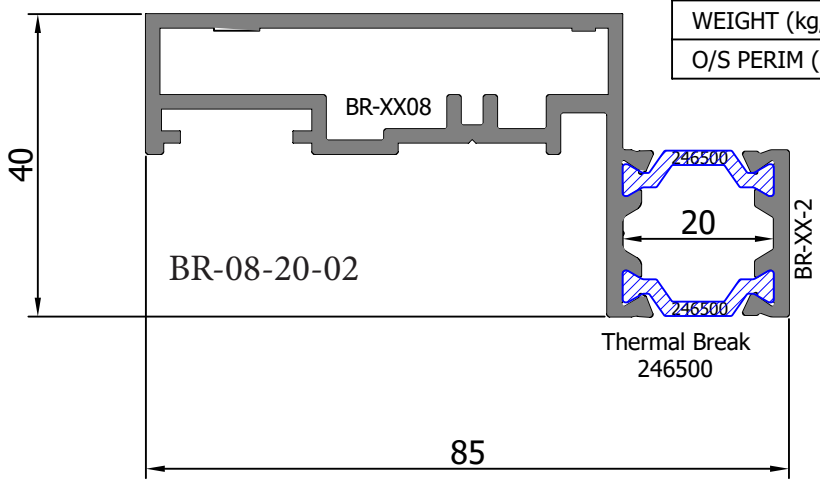

## Section19 - Miscellaneous Section

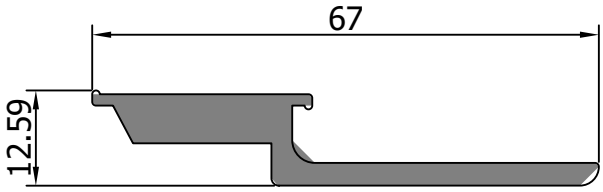


### GLAZING SUPPORT

| | |
|---|---|
| SECTIONB | R-15012 |
| AREA (sqmm) | 294.07 |
| WEIGHT (kg/m) | 0.791 |
| O/S PERIM (mm) | 159 |

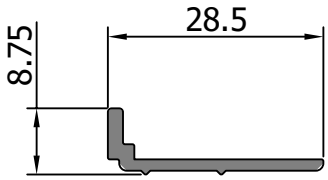


### GLAZING SUPPORT

| | |
|---|---|
| SECTIONB | R-GS1 |
| AREA (sqmm) | 57.2 |
| WEIGHT (kg/m) | 0.155 |
| O/S PERIM (mm) | 72.5 |

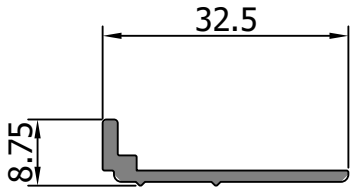


### GLAZING SUPPORT

| | |
|---|---|
| SECTIONB | R-GS2 |
| AREA (sqmm) | 65.2 |
| WEIGHT (kg/m) | 0.176 |
| O/S PERIM (mm) | 80.5 |

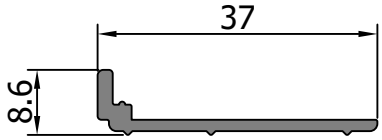


### GLAZING SUPPORT

| | |
|---|---|
| SECTIONB | R-GS3 |
| AREA (sqmm) | 72.39 |
| WEIGHT (kg/m) | 0.195 |
| O/S PERIM (mm) | 90.10 |

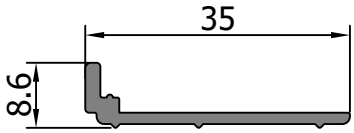


### GLAZING SUPPORT

| | |
|---|---|
| SECTIONB | R-GS6 |
| AREA (sqmm) | 69.097 |
| WEIGHT (kg/m) | 0.188 |
| O/S PERIM (mm) | 85.796 |

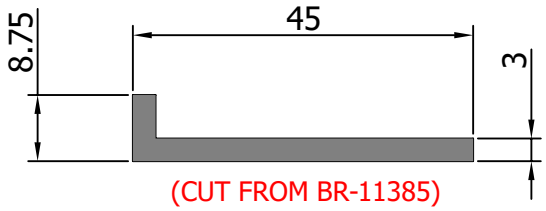


(CUT FROM BR-11385)

### GLAZING SUPPORT

| | |
|---|---|
| SECTIONB | R-SGS1 |
| AREA (sqmm) | 258 |
| WEIGHT (kg/m) | 0.697 |
| O/S PERIM (mm) | 178 |

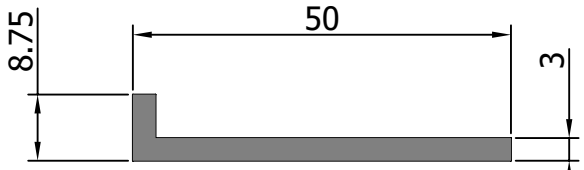


(CUT FROM BR-12443)

### GLAZING SUPPORT

| | |
|---|---|
| SECTIONB | R-SGS2 |
| AREA (sqmm) | 291 |
| WEIGHT (kg/m) | 0.786 |
| O/S PERIM (mm) | 200 |

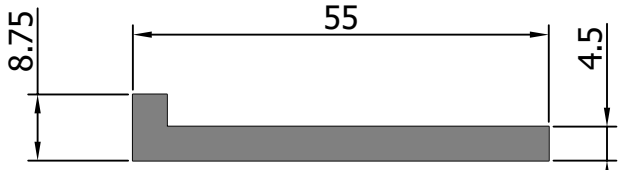


(CUT FROM BR-14768)

### GLAZING SUPPORT

| | |
|---|---|
| SECTIONB | R-SGS3 |
| AREA (sqmm) | 475 |
| WEIGHT (kg/m) | 1.282 |
| O/S PERIM (mm) | 220 |

## Section19 - Miscellaneous Section

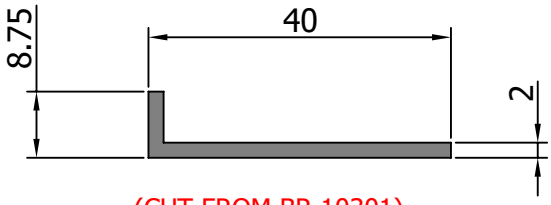


(CUT FROM BR-10301)

### GLAZING SUPPORT

| | |
|---|---|
| SECTION | BR-SGS2 |
| AREA (sqmm) | 156 |
| WEIGHT (kg/m) | 0.422 |
| O/S PERIM (mm) | 160 |

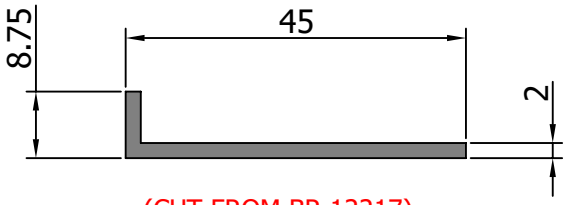


(CUT FROM BR-12217)

### GLAZING SUPPORT

| | |
|---|---|
| SECTION | BR-SGS3 |
| AREA (sqmm) | 128 |
| WEIGHT (kg/m) | 0.349 |
| O/S PERIM (mm) | 132 |

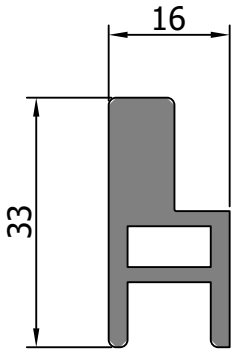


### SPANDREL PANEL FRAME

| | |
|---|---|
| SECTION | BR-SP3 |
| AREA (sqmm) | 263.4 |
| WEIGHT (kg/m) | 0.711 |
| O/S PERIM (mm) | 112.9 |

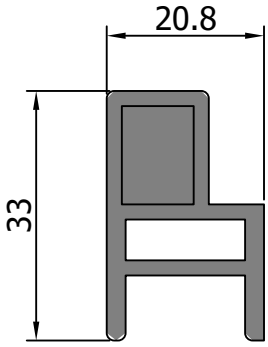


### SPANDREL PANEL FRAME

| | |
|---|---|
| SECTION | BR-SP4 |
| AREA (sqmm) | 231.1 |
| WEIGHT (kg/m) | 0.624 |
| O/S PERIM (mm) | 122.65 |

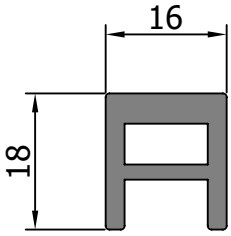


### SPANDREL PANEL FRAME

| | |
|---|---|
| SECTION | BR-SP5 |
| AREA (sqmm) | 155.7 |
| WEIGHT (kg/m) | 0.420 |
| O/S PERIM (mm) | 79.9 |

## Section19 - Miscellaneous Section

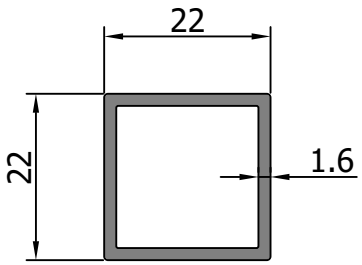


### PERIMETER HOLLOW SECTION

| | |
|---|---|
| SECTION | BR-2524 |
| AREA (sqmm) | 130.4 |
| WEIGHT (kg/m) | 0.352 |
| O/S PERIM (mm) | 87.1 |

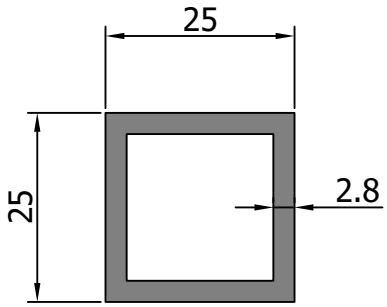


### PERIMETER HOLLOW SECTION

| | |
|---|---|
| SECTION | BR-22740 |
| AREA (sqmm) | 248.6 |
| WEIGHT (kg/m) | 0.671 |
| O/S PERIM (mm) | 100 |

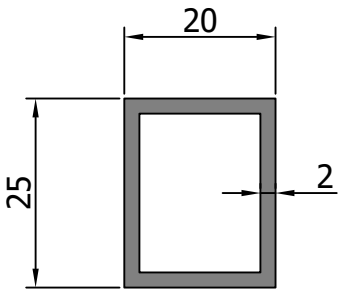


### PERIMETER HOLLOW SECTION

| | |
|---|---|
| SECTION | BR-22651 |
| AREA (sqmm) | 164 |
| WEIGHT (kg/m) | 0.446 |
| O/S PERIM (mm) | 90 |

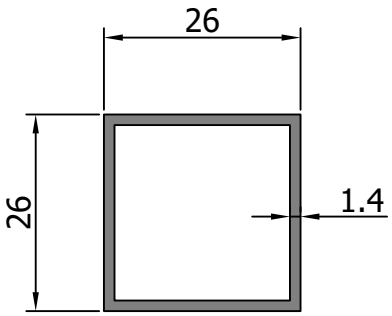


### PERIMETER HOLLOW SECTION

| | |
|---|---|
| SECTION | BR-20618 |
| AREA (sqmm) | 137.8 |
| WEIGHT (kg/m) | 0.372 |
| O/S PERIM (mm) | 104 |

## Section19 - Miscellaneous Section

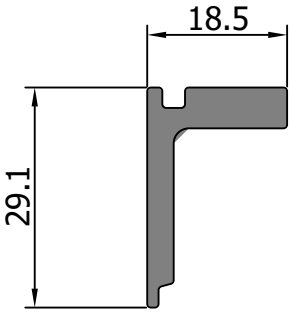


### FIXING LUG PROFILE

| | |
|---|---|
| SECTIONB | R-15007A |
| AREA (sqmm) | 169.4 |
| WEIGHT (kg/m) | 0.457 |
| O/S PERIM (mm) | 97.1 |

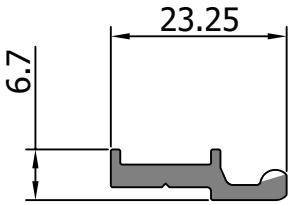


### DGU FIXING LUG

| | |
|---|---|
| SECTIONB | R-FL2 |
| AREA (sqmm) | 74.6 |
| WEIGHT (kg/m) | 0.201 |
| O/S PERIM (mm) | 64.3 |

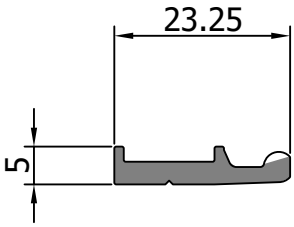


### DGU FIXING LUG

| | |
|---|---|
| SECTIONB | R-FL3 |
| AREA (sqmm) | 73.4 |
| WEIGHT (kg/m) | 0.198 |
| O/S PERIM (mm) | 60.9 |

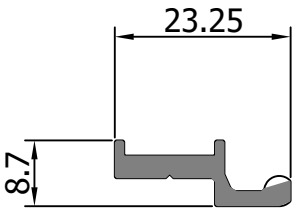


### DGU FIXING LUG

| | |
|---|---|
| SECTIONB | R-FL4 |
| AREA (sqmm) | 77.4 |
| WEIGHT (kg/m) | 0.209 |
| O/S PERIM (mm) | 68.75 |

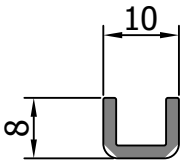


### DGU CHANNEL INSERT

| | |
|---|---|
| SECTIONB | R-GC28 |
| AREA (sqmm) | 36.76 |
| WEIGHT (kg/m) | 0.100 |
| O/S PERIM (mm) | 46.3 |

## Section19 - Miscellaneous Section

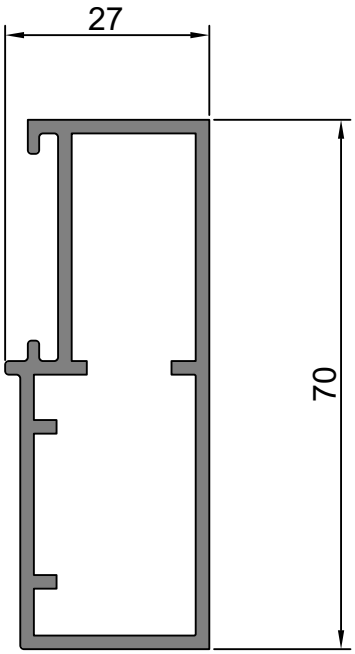


SUBFRAME

| | |
|---|---|
| SECTION | BR-SF1 |
| AREA (sqmm) | 368.1 |
| WEIGHT (kg/m) | 0.994 |
| O/S PERIM (mm) | 210 |

## Section19 - Miscellaneous Section

### CORNER CLEAT PROFILE

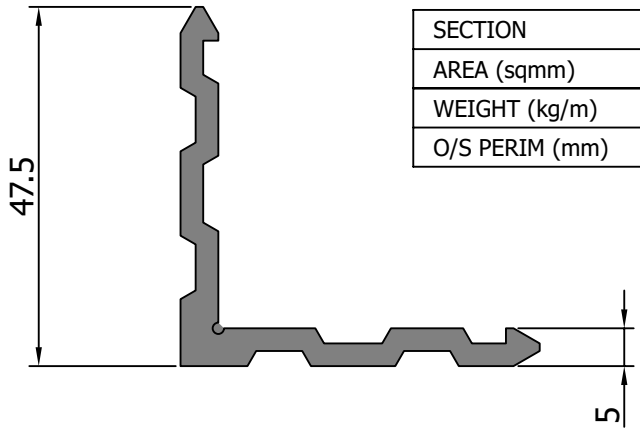


| SECTION | BR-15005 |
|---|---|
| AREA (sqmm) | 321.2 |
| WEIGHT (kg/m) | 0.867 |
| O/S PERIM (mm) | 206.3 |

### CORNER CLEAT PROFILE

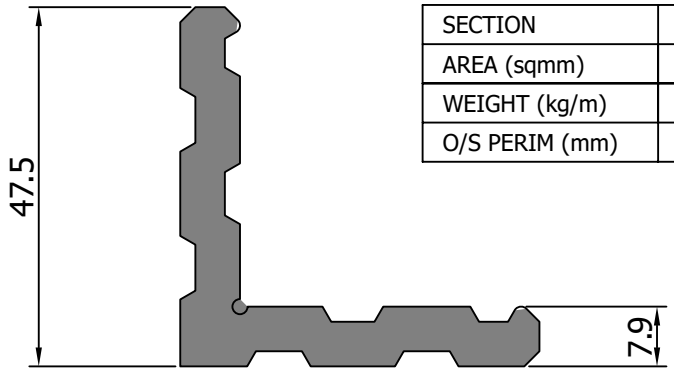


| SECTION | BR-TT09 |
|---|---|
| AREA (sqmm) | 572.2 |
| WEIGHT (kg/m) | 1.556 |
| O/S PERIM (mm) | 206.2 |

### CORNER CLEAT PROFILE

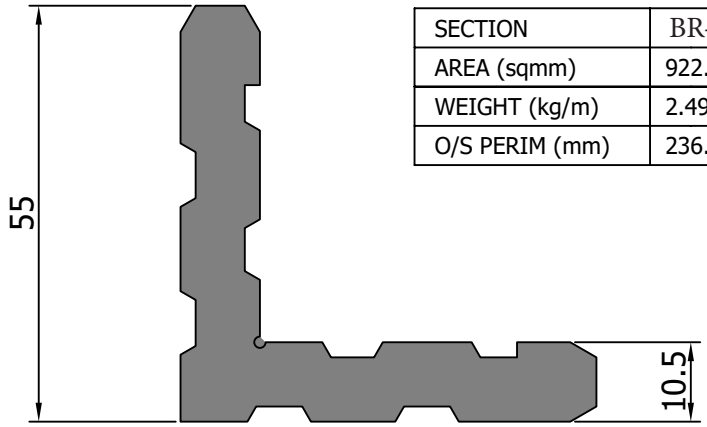


| SECTION | BR-TT69 |
|---|---|
| AREA (sqmm) | 922.5 |
| WEIGHT (kg/m) | 2.491 |
| O/S PERIM (mm) | 236.3 |

## Section19 - Miscellaneous Section

# BRITAL CW56 Stick Curtain Walling System Sections - Corner Cleats

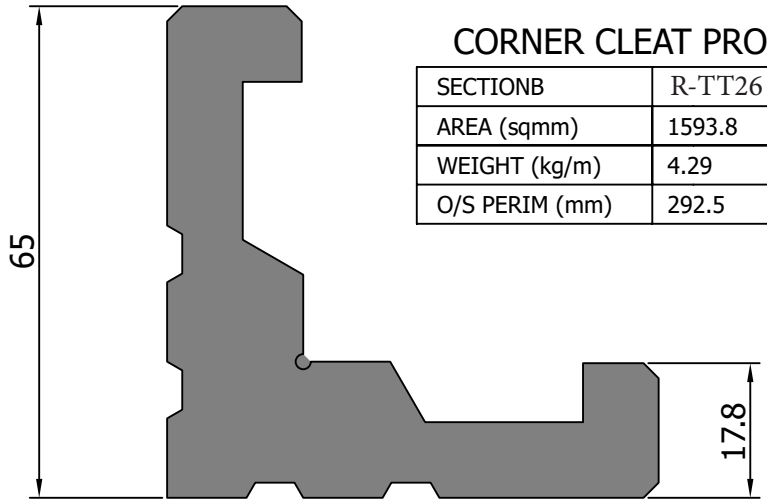


### CORNER CLEAT PROFILE

| | |
|---|---|
| SECTIONB | R-TT26 |
| AREA (sqmm) | 1593.8 |
| WEIGHT (kg/m) | 4.29 |
| O/S PERIM (mm) | 292.5 |

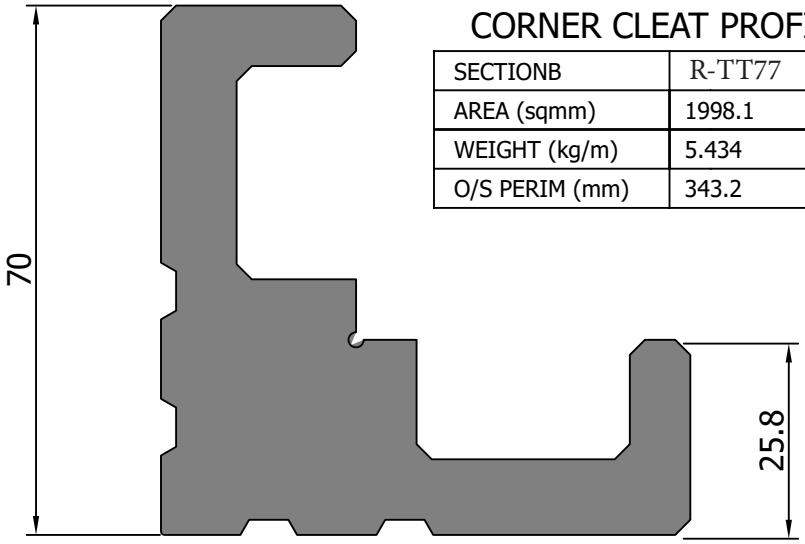


### CORNER CLEAT PROFILE

| | |
|---|---|
| SECTIONB | R-TT77 |
| AREA (sqmm) | 1998.1 |
| WEIGHT (kg/m) | 5.434 |
| O/S PERIM (mm) | 343.2 |

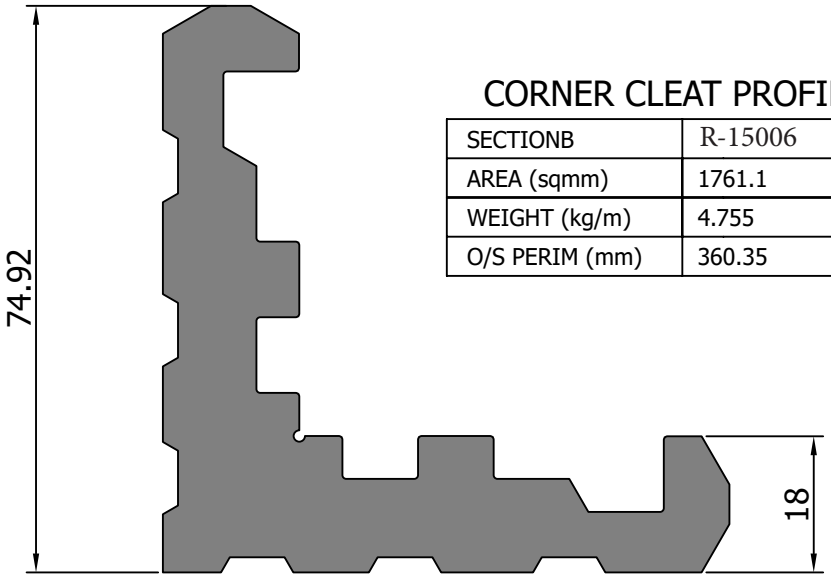


### CORNER CLEAT PROFILE

| | |
|---|---|
| SECTIONB | R-15006 |
| AREA (sqmm) | 1761.1 |
| WEIGHT (kg/m) | 4.755 |
| O/S PERIM (mm) | 360.35 |

## Section19 - Miscellaneous Section

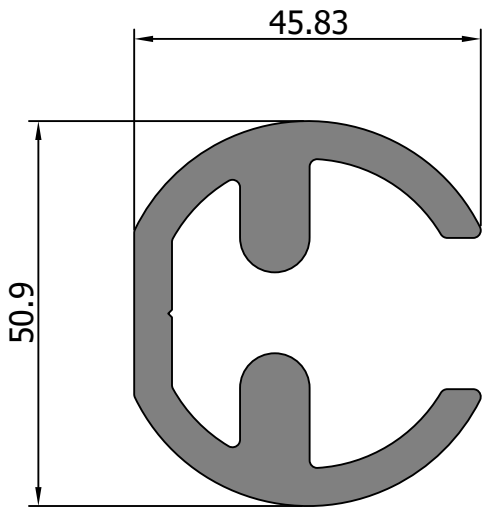


### TRANSOM SPIGOT

| | |
|---|---|
| SECTION | BR-CC1 |
| AREA (sqmm) | 861.36 |
| WEIGHT (kg/m) | 2.326 |
| O/S PERIM (mm) | 298.6 |

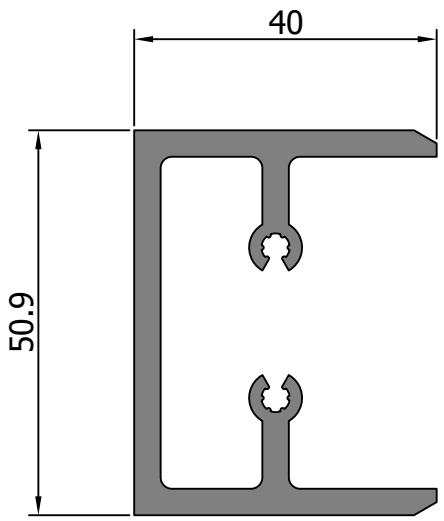


### TRANSOM SPIGOT

| | |
|---|---|
| SECTION | BR-15014 |
| AREA (sqmm) | 539.43 |
| WEIGHT (kg/m) | 1.456 |
| O/S PERIM (mm) | 336.4 |

## Section19 - Miscellaneous Section

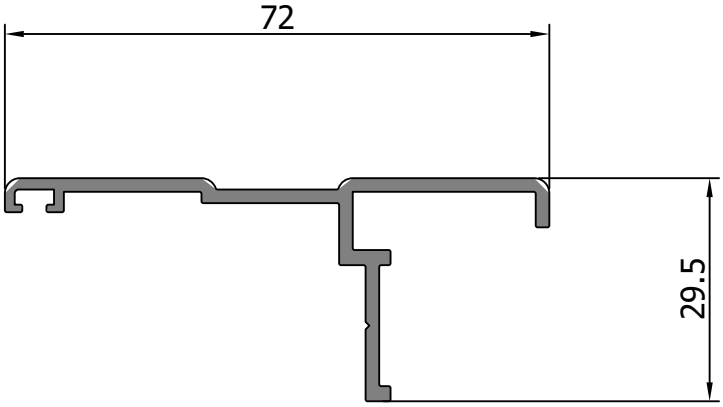


### EXPANSION JOINT PROFILE

| | |
|---|---|
| SECTION | BR-XJ01 |
| AREA (sqmm) | 208 |
| WEIGHT (kg/m) | 0.561 |
| O/S PERIM (mm) | 238.2 |

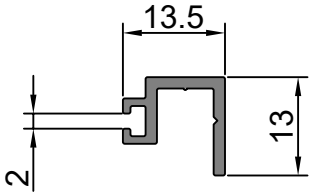


### EXPANSION JOINT PROFILE

| | |
|---|---|
| SECTION | BR-GC1 |
| AREA (sqmm) | 51.15 |
| WEIGHT (kg/m) | 0.138 |
| O/S PERIM (mm) | 75.1 |

## Section19 - Miscellaneous Section

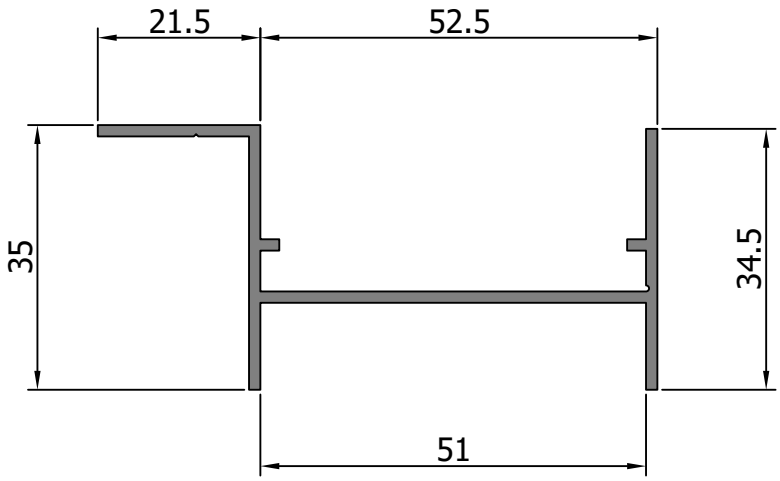


### INSULATION FRAME

| | |
|---|---|
| SECTION | BR-FR1 |
| AREA (sqmm) | 217.9 |
| WEIGHT (kg/m) | 0.588 |
| O/S PERIM (mm) | 294.7 |

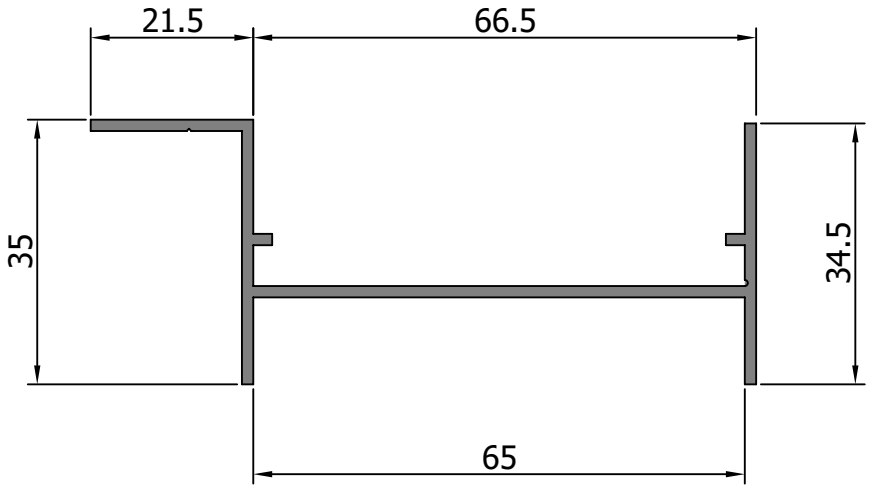


### INSULATION FRAME

| | |
|---|---|
| SECTION | BR-FR2 |
| AREA (sqmm) | 238.9 |
| WEIGHT (kg/m) | 0.647 |
| O/S PERIM (mm) | 322.7 |

## Section19 - Miscellaneous Section

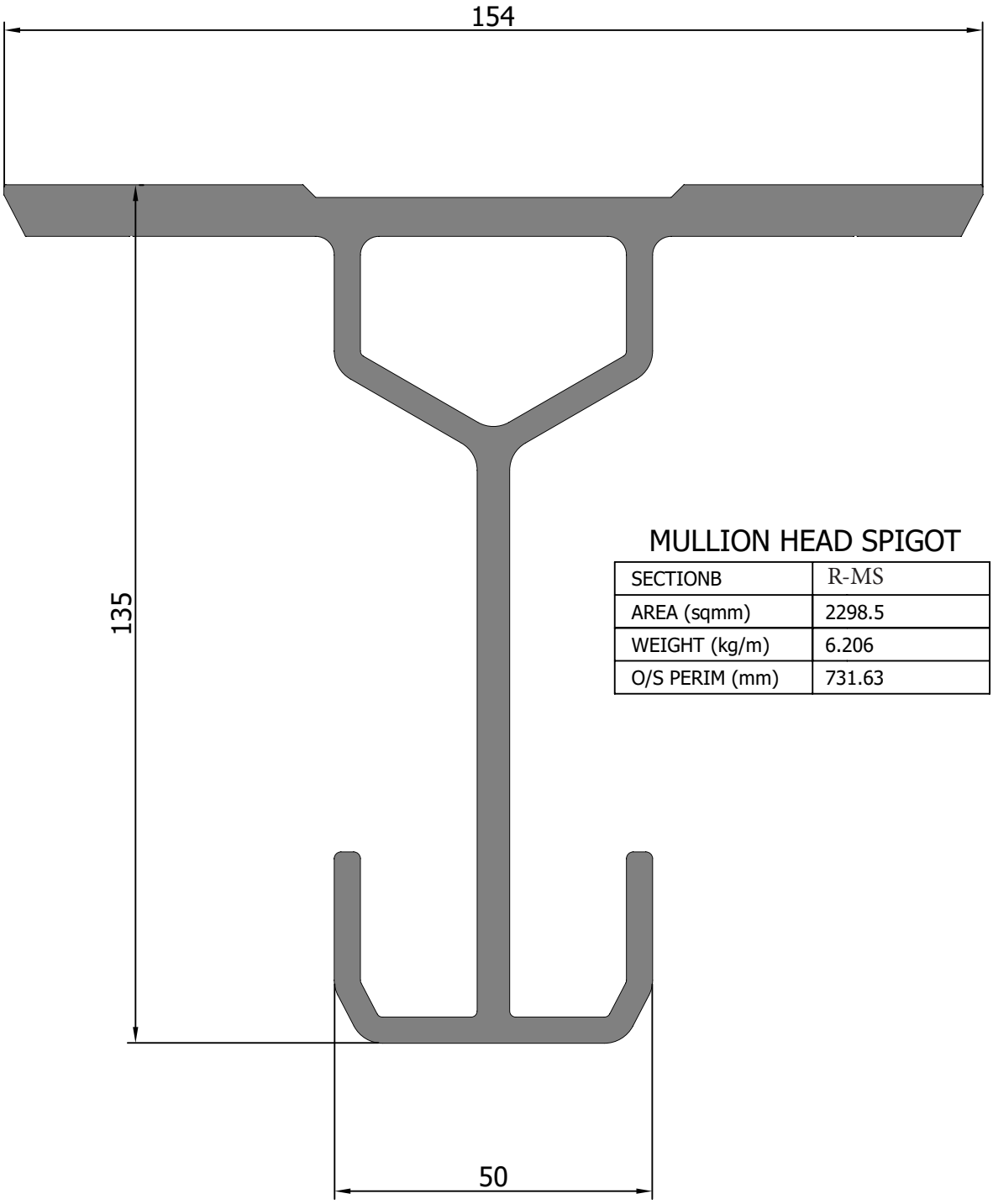


MULLION HEAD SPIGOT

| | |
|---|---|
| SECTIONB | R-MS |
| AREA (sqmm) | 2298.5 |
| WEIGHT (kg/m) | 6.206 |
| O/S PERIM (mm) | 731.63 |

## Section19 - Miscellaneous Section

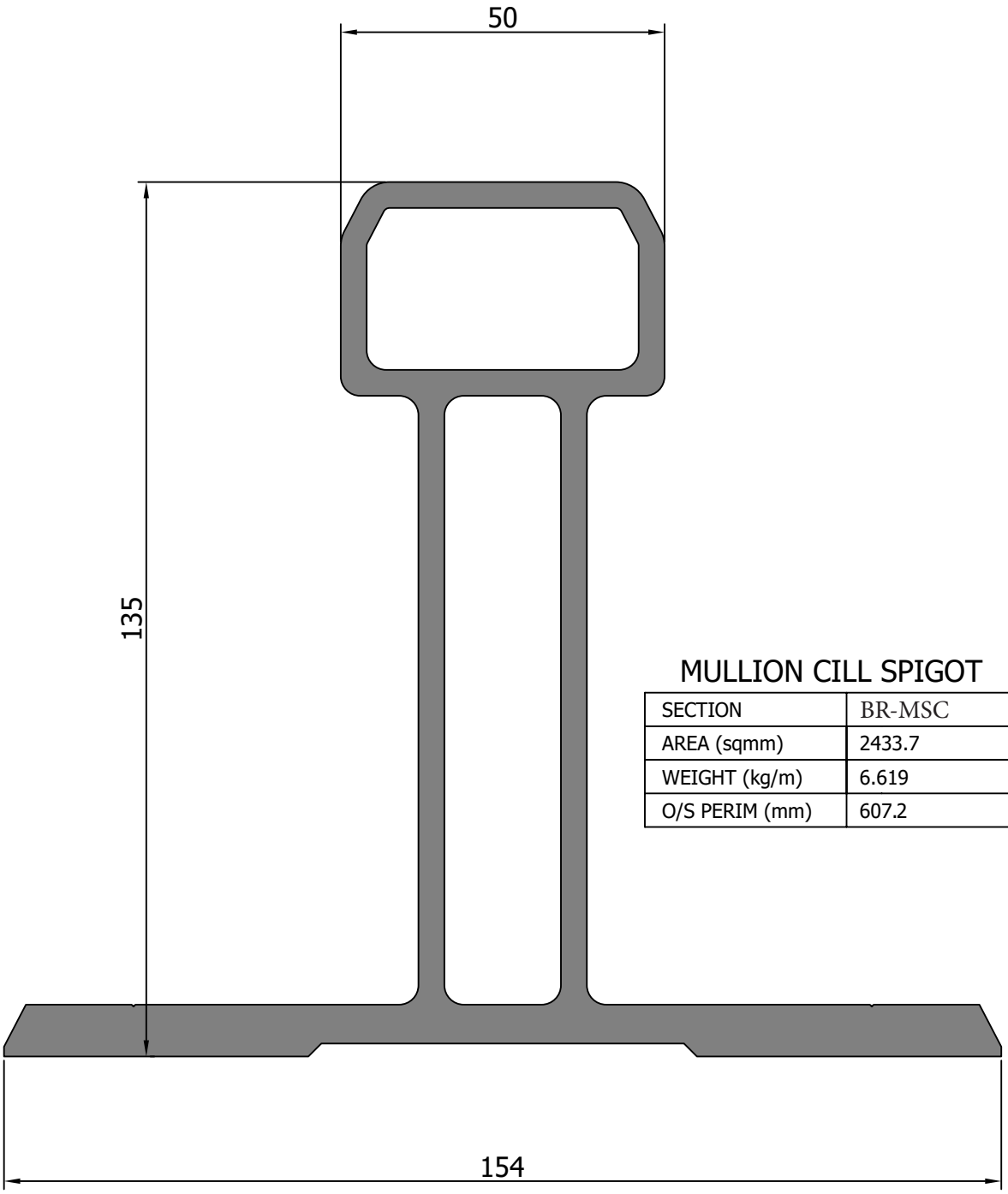


### MULLION CILL SPIGOT

| | |
|---|---|
| SECTION | BR-MSC |
| AREA (sqmm) | 2433.7 |
| WEIGHT (kg/m) | 6.619 |
| O/S PERIM (mm) | 607.2 |

## Section19 - Miscellaneous Section

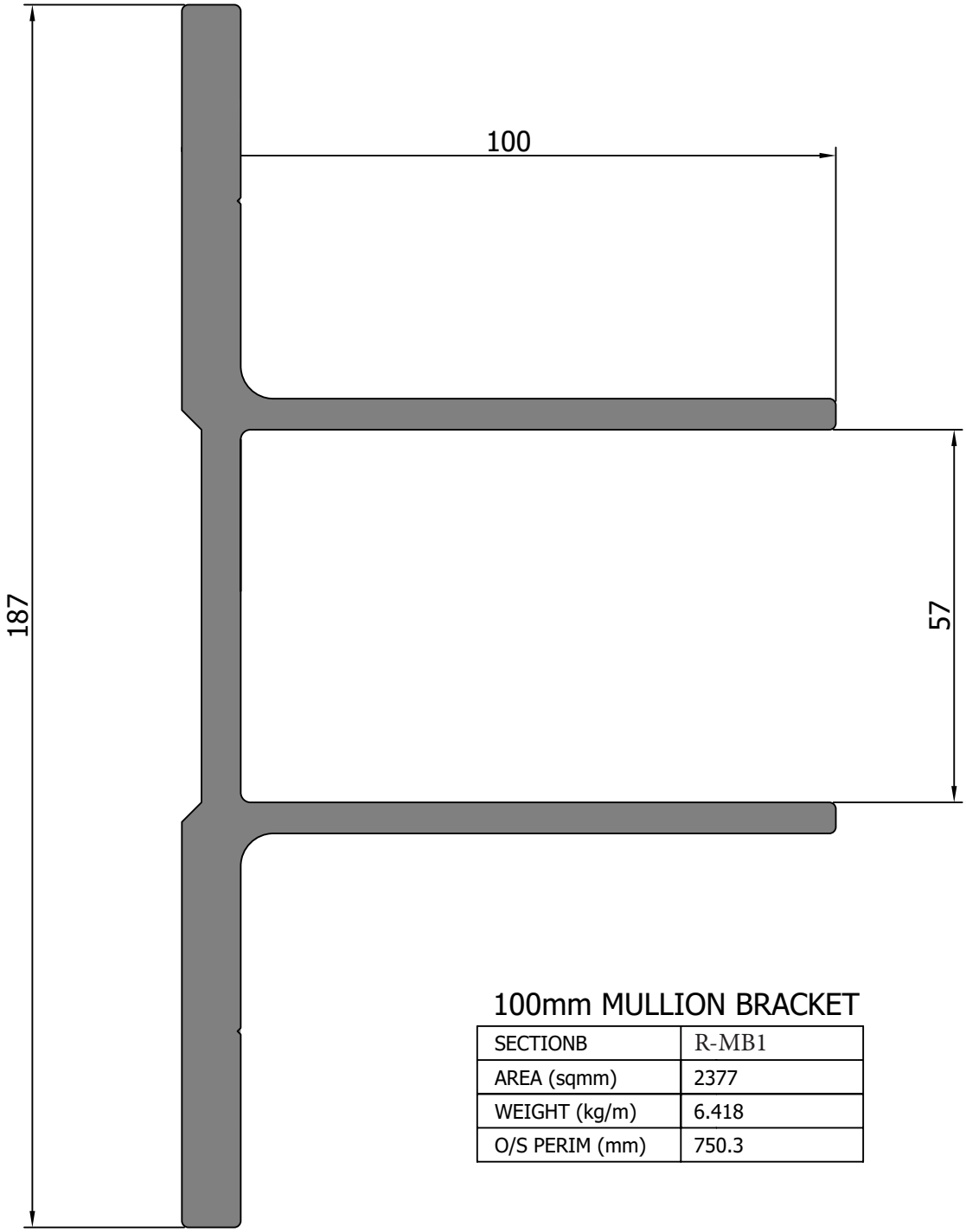


100mm MULLION BRACKET

| | |
|---|---|
| SECTIONB | R-MB1 |
| AREA (sqmm) | 2377 |
| WEIGHT (kg/m) | 6.418 |
| O/S PERIM (mm) | 750.3 |

## Section19 - Miscellaneous Section

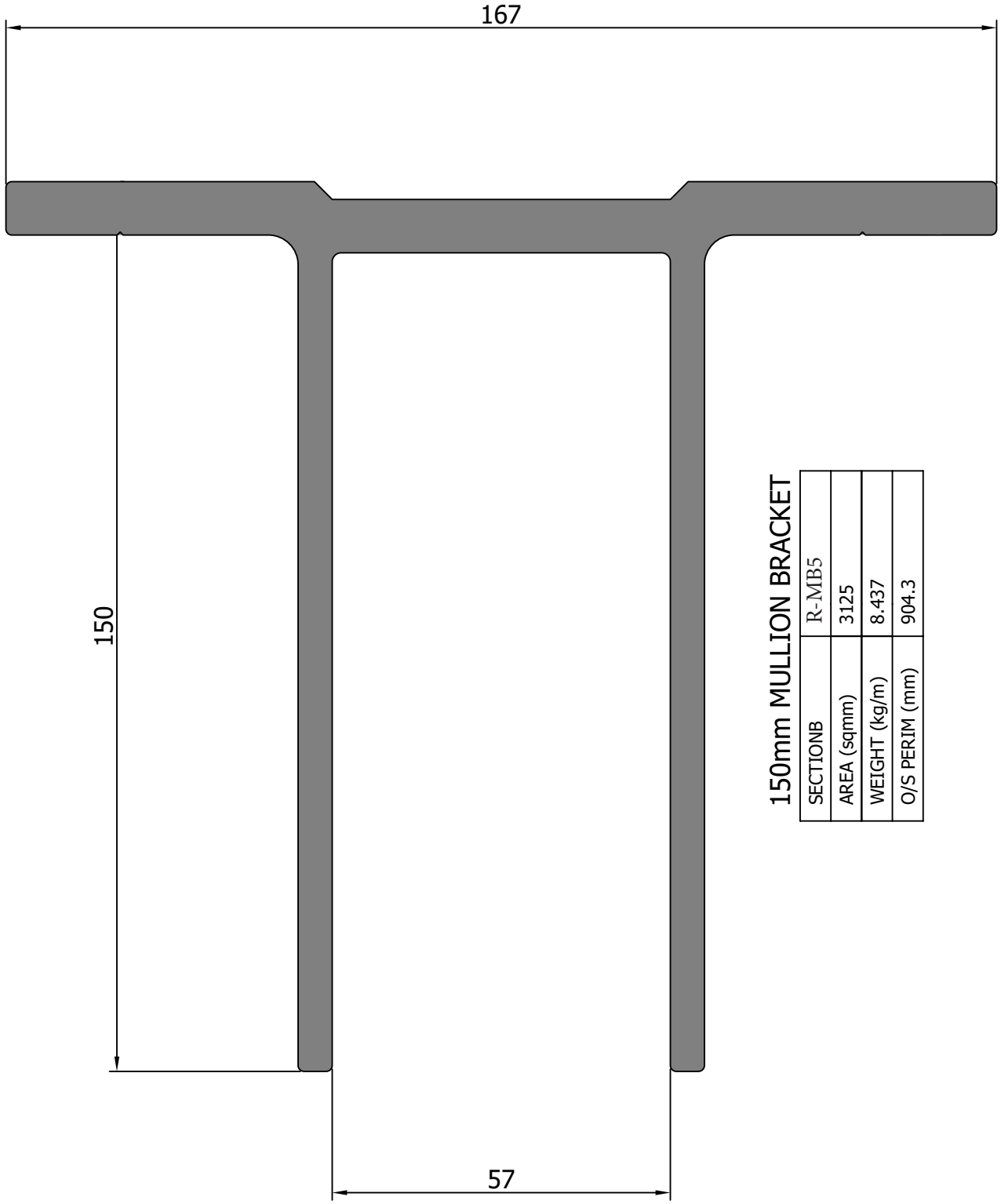


150mm MULLION BRACKET

| | |
|---|---|
| SECTIONB | R-MB5 |
| AREA (sqmm) | 3125 |
| WEIGHT (kg/m) | 8.437 |
| O/S PERIM (mm) | 904.3 |

## Section19 - Miscellaneous Section

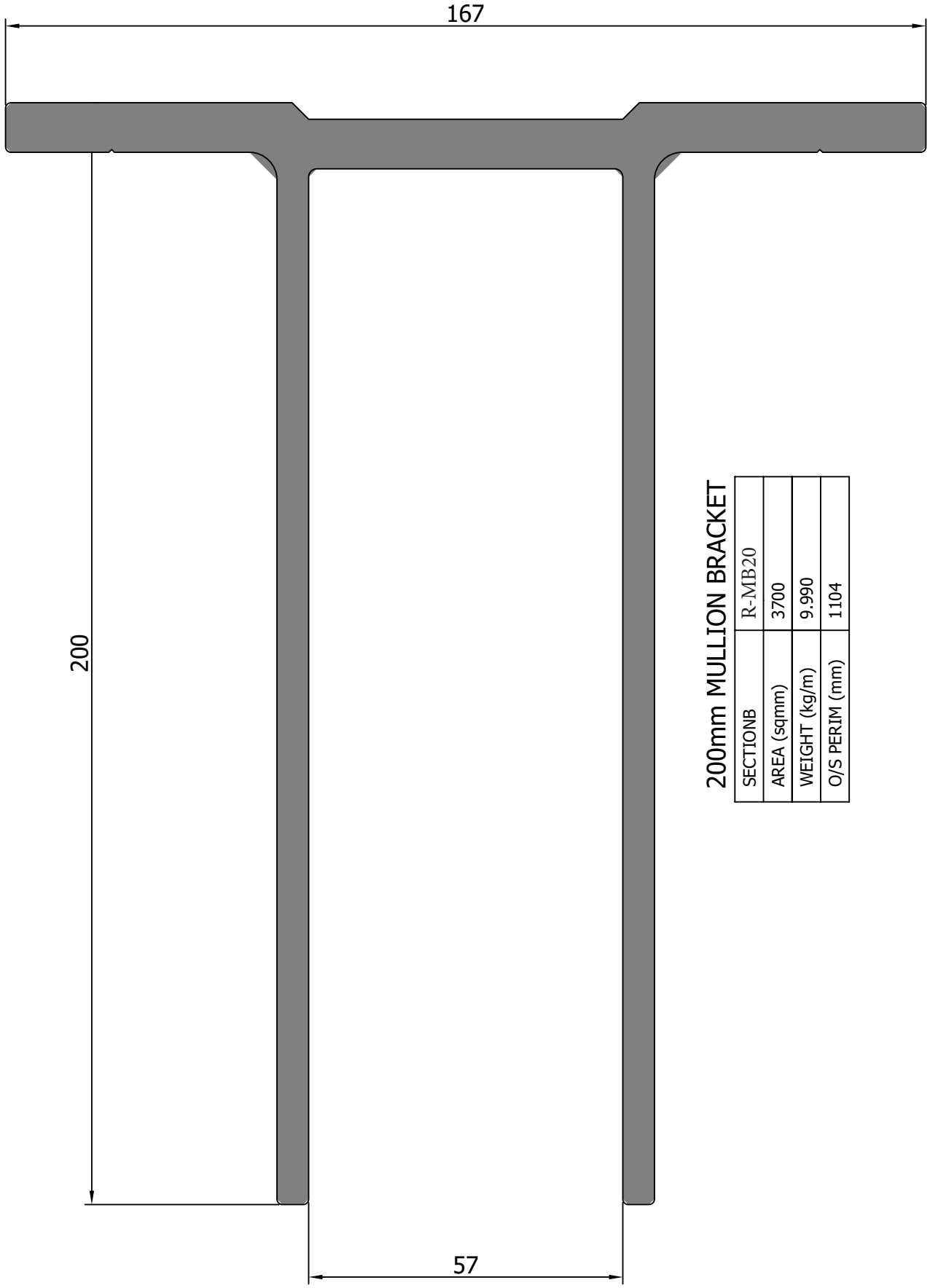


200mm MULLION BRACKET

| | |
|---|---|
| SECTIONB | R-MB20 |
| AREA (sqmm) | 3700 |
| WEIGHT (kg/m) | 9.990 |
| O/S PERIM (mm) | 1104 |

## Section19 - Miscellaneous Section

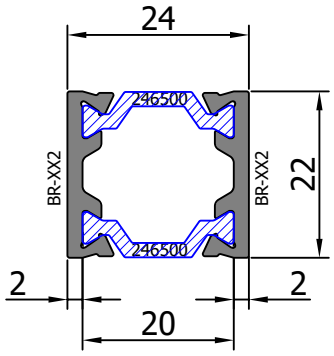


BR-XX2-20-XX2

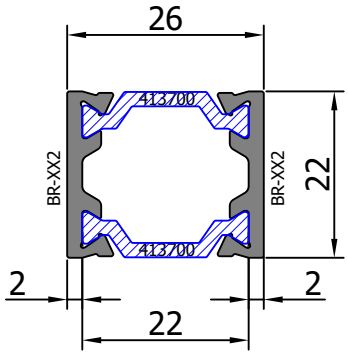


BR-XX2-22-XX2

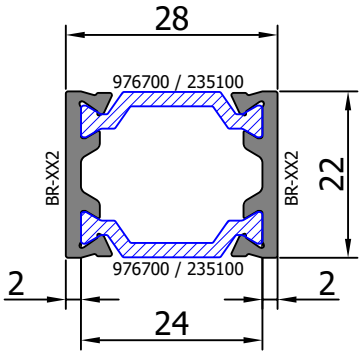


BR-XX2-24-XX2

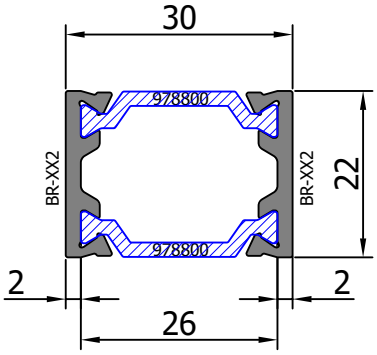


BR-XX2-26-XX2

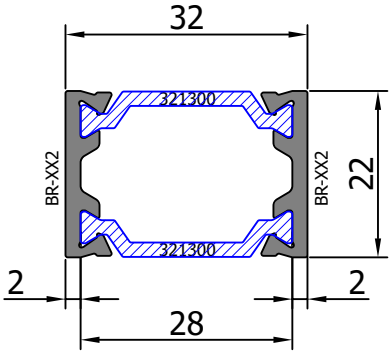


BR-XX2-28-XX2

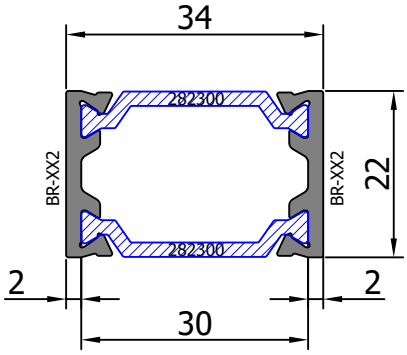


BR-XX2-30-XX2

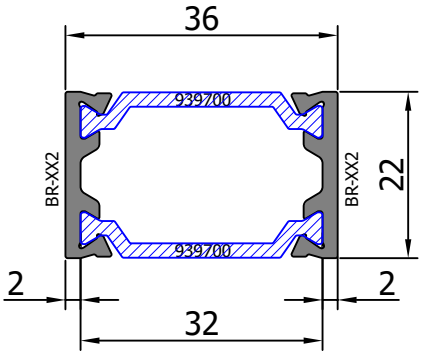


BR-XX2-32-XX2

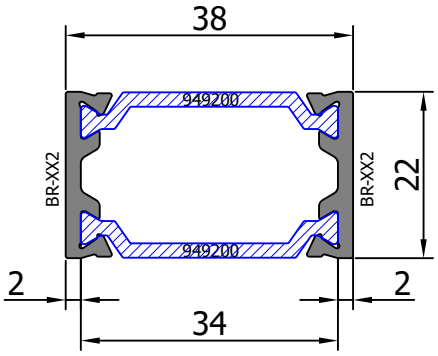


BR-XX2-34-XX2

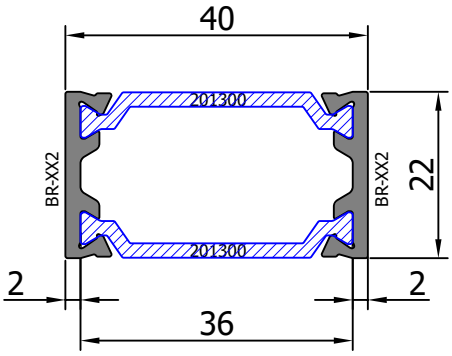


BR-XX2-36-XX2

### TB SPACER TUBE PROFILE

| | |
|---|---|
| SECTION | BR-XX2 |
| AREA (sqmm) | 70 |
| WEIGHT (kg/m) | 0.189 |
| O/S PERIM (mm) | 76.9 |

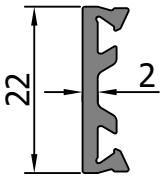

## Section20 - EPDM & PVC Section

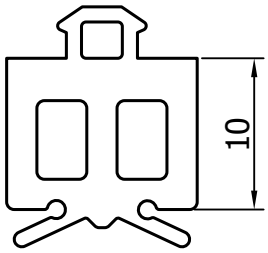


Mullion Gasket
BR-04

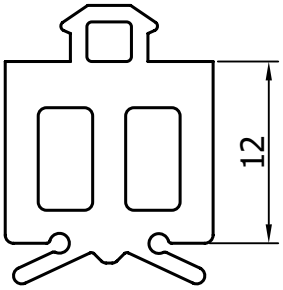


Mullion Gasket
BR-53

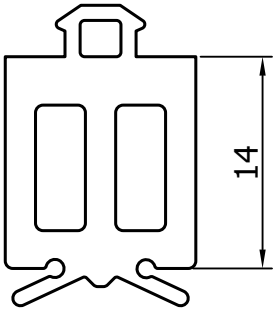


Mullion Gasket
BR-59

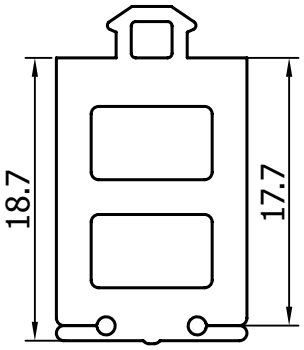


Mullion Internal
Gasket
BR-59

---

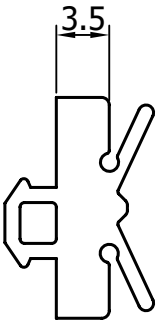


Transom Gasket
BR-05

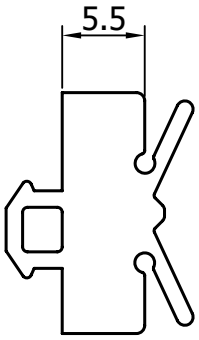


Transom Gasket
BR-54

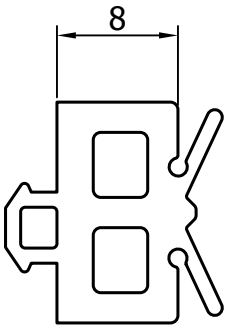


Transom Gasket
BR-50

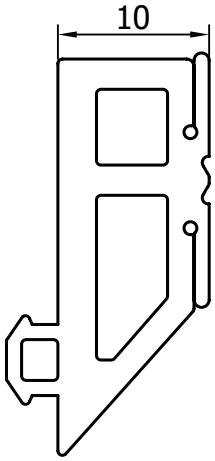


Corner Mullion
Internal Gasket
BR-76

---

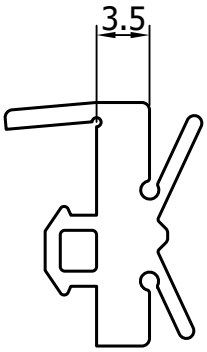


Transom Gasket
BR-56

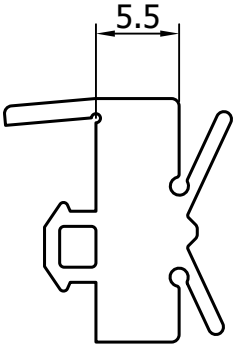


Transom Gasket
BR-57

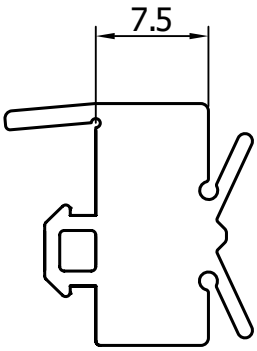


Transom Gasket
BR-58

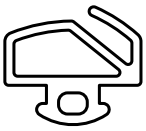

Internal
Weather Seal
BR-76

## Section19 - Miscellaneous Section

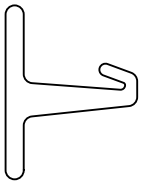

Seal
BR-07

Weather Seal
BR-08

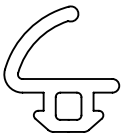

Internal
Gasket
BR-37

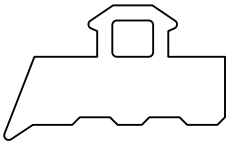

Plate
Gasket
BR-06

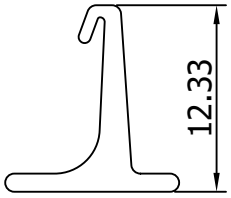


Weather
Seal Gasket
BR-61

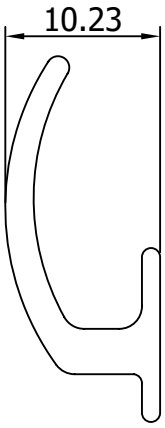


Weather
Seal Gasket
BR-62

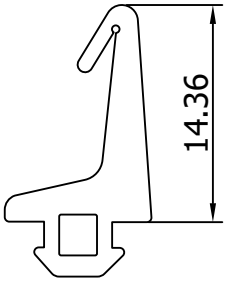


Flipper Seal
Gasket
BR-63

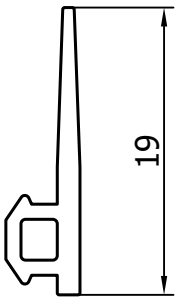


Weather
Seal Gasket
BR-66

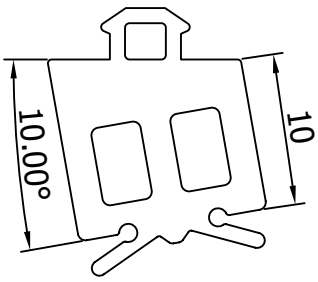


Facetted
Mullion
Gasket
BR-35

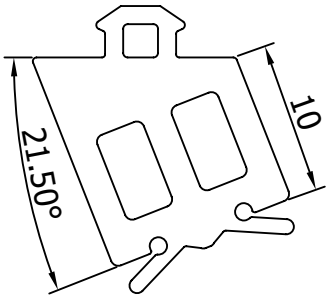


Facetted
Mullion
Gasket
BR-46

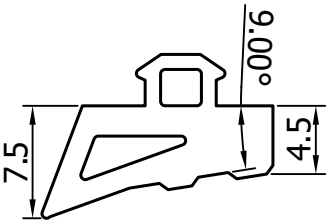


Facetted
Mullion
Gasket
BR-47

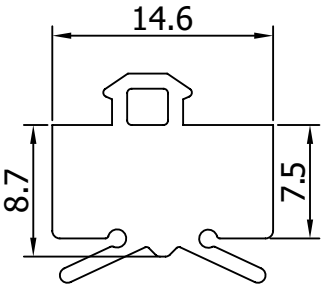


Transom
Gasket
BR-88

## Section20 - EPDM & PVC Section

| REF. | COMPONENT | DRAWING | MATERIAL |
|---|---|---|---|
| BR-02 | 8.5mm Thermal Break | 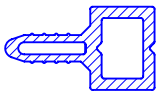 | PVC |
| BR-30 | 11.5mm Thermal Break | 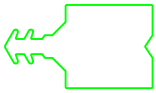 | EPDM |
| BR-44 | 27mm Thermal Break | 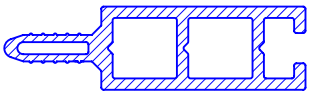 | PVC |
| BR-48 | 18mm Thermal Break | 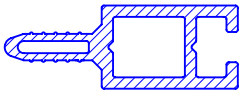 | PVC |
| BR-51 | 24mm Thermal Break | 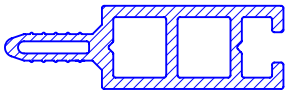 | PVC |
| BR-52 | 33mm Thermal Break | 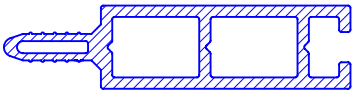 | PVC |
| BR-60 | 10.5mm Thermal Break | 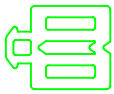 | EPDM |
| BR-64 | 6mm Thermal Break | 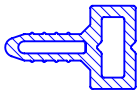 | PVC |
| BR-65 | 14.5mm Thermal Break | 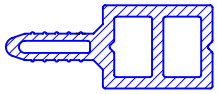 | PVC |
| BR-72 | 14.0mm Thermal Break | 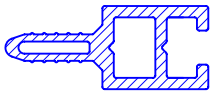 | PVC |
| BR-73 | 20.0mm Thermal Break | 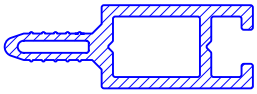 | PVC |
| BR-74 | 30.0mm Thermal Break | 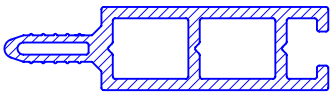 | PVC |
| BR-75 | Capped Curtain Wall Transom Gasket - (MID GREY COLOUR) |  | EPDM |
| BR-17 | 41.0mm Thermal Break | 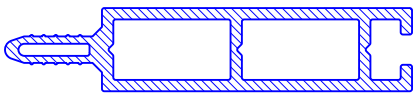 | PVC |
| BR-18 | 28.0mm Thermal Break | 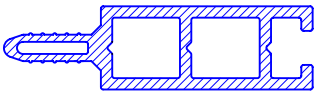 | PVC |

## Section19 - Miscellaneous Section

| REF. | COMPONENT | DRAWING | MATERIAL |
|---|---|---|---|
| BR-S1 | 32 x 6.5mm Setting Block | | EPDM |
| BR-S2 | 25 x 3mm Setting Block | | EPDM |
| BR-S3 | 8 x 3mm Setting Block | | EPDM |
| BR-S4 | 12 x 18mm Setting Block | | EPDM |
| BR-S5 | 5 x 28mm Setting Block | | EPDM |
| BR-S7 | 23 x 5mm Setting Block | | EPDM |
| BR-S8 | 12 x 5mm Setting Block | | EPDM |
| BR-S9 | 28 x 3mm Setting Block | | EPDM |
| BR-S10 | 20 x 3mm Setting Block | | EPDM |
| BR-S11 | 10 x 3mm Setting Block | | EPDM |
| BR-S12 | 32.5 x 3mm Setting Block | | EPDM |
| BR-S13 | 40 x 3.0mm Setting Block | | EPDM |
| BR-S14 | 32 x 5mm Setting Block | | EPDM |
| BR-S15 | 46 x 5mm Setting Block | | EPDM |
| BR-S16 | 20 x 5mm Setting Block | | EPDM |
| BR-S17 | 38 x 5mm Setting Block | | EPDM |

## Section20 - EPDM & PVC Section

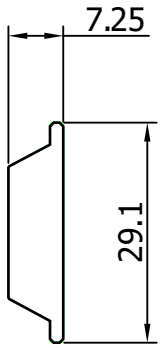


BR-P1 Spacer
100mm Long

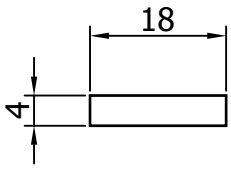


EPDM Spacer
BR-55

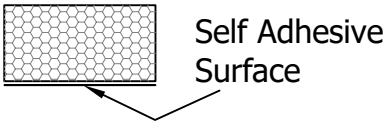


10mm x 20mm
Black (Spacer Tape)

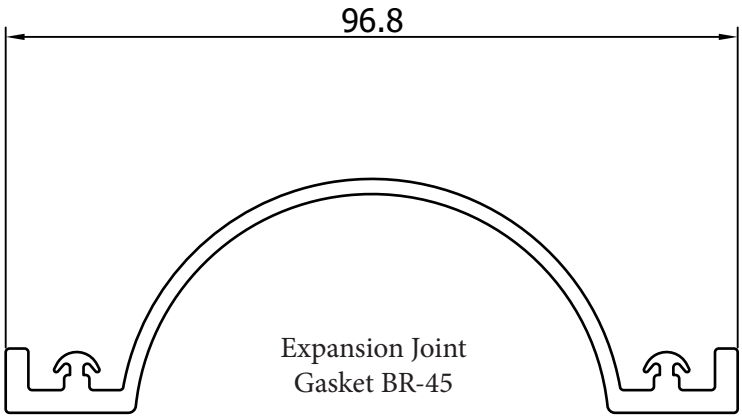


Expansion Joint
Gasket BR-45

## Section21 - Cleat & Spigots

(Cut from section BR-15014)

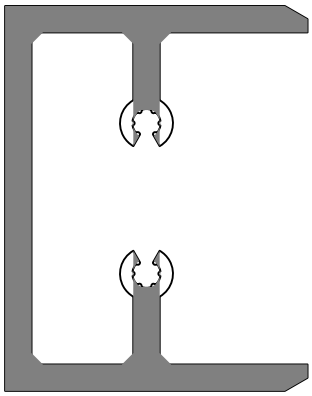

Transom Spigot

BR-TS1 = Length 37mm (for Transom Back BR-25002)
BR-TS2 = Length 56mm (for Transom Back BR-25001)
BR-TS4 = Length 76mm (for Transom Back BR-TB1)
BR-TS5 = Length 98mm (for Transom Back BR-25027)
BR-TS13 = Length 160mm (for Transom Back BR-TB2 & BR-TB80)
BR-TS14 = Length 108mm (for Transom Back BR-TB3)
BR-TS15 = Length 130mm (for Transom Back BR-TB4)
BR-TS16 = Length 195mm (for Transom Back BR-TB199)

## Section21 - Cleat & Spigots

(Cut from section BR-15014)

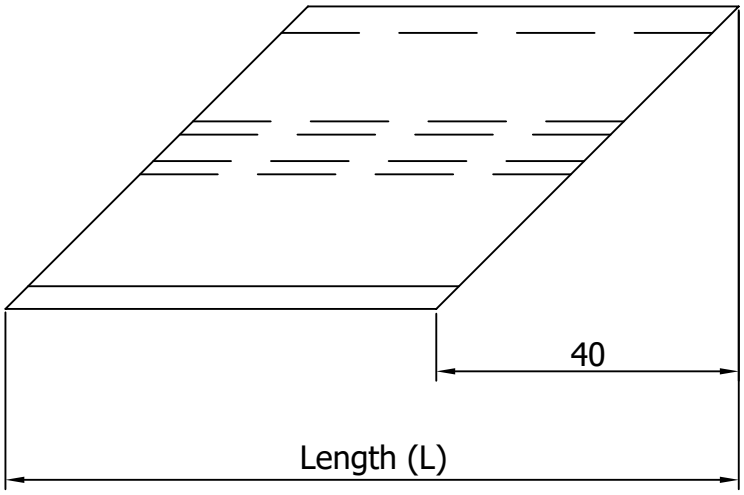


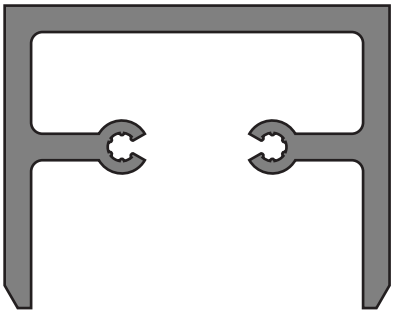

Transom Spigot

CUT 97mm LONG - SPIGOT TYPE BR-STS2
CUT 125mm LONG - SPIGOT TYPE BR-STS4
CUT 156mm LONG - SPIGOT TYPE BR-STS5
CUT 173mm LONG - SPIGOT TYPE BR-STS14
CUT 201mm LONG - SPIGOT TYPE BR-STS15
CUT 244mm LONG - SPIGOT TYPE BR-STS13
CUT 293mm LONG - SPIGOT TYPE BR-STS16

## Section21 - Cleat & Spigots

(Cut from section BR-CC1)

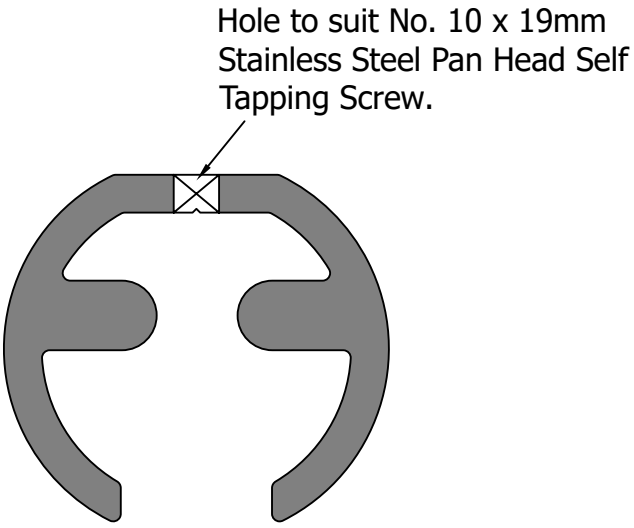


Transom "C" Spigot

BR-TS17 = Length 37mm (for Transom Back BR-25002)
BR-TS18 = Length 56mm (for Transom Back BR-25001)
BR-TS20 = Length 76mm (for Transom Back BR-TB1)
BR-TS21 = Length 98mm (for Transom Back BR-25027)
BR-TS22 = Length 108mm (for Transom Back BR-TB3)
BR-TS23 = Length 130mm (for Transom Back BR-TB4)
BR-TS24 = Length 160mm (for Transom Back BR-TB2)
BR-TS25 = Length 195mm (for Transom Back BR-TB199)

## Section21 - Cleat & Spigots

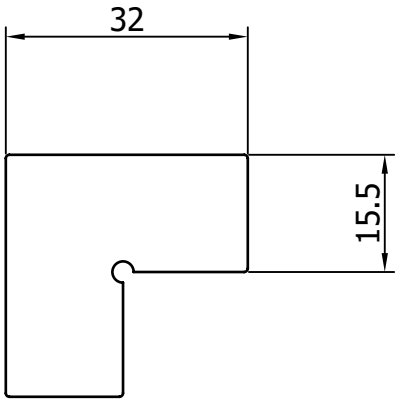


Thickness 0.9mm
Stainless Steel or
Aluminium
Corner Brace BR-B1

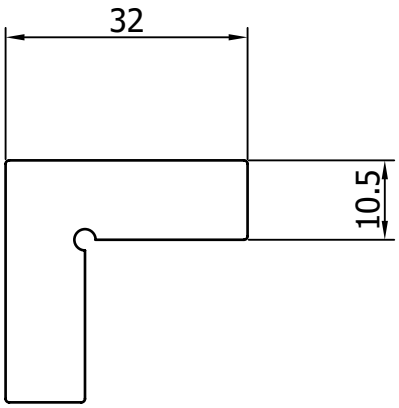


Thickness 0.9mm
Stainless Steel or
Aluminium
Corner Brace BR-B2

## Section21 - Cleat & Spigots

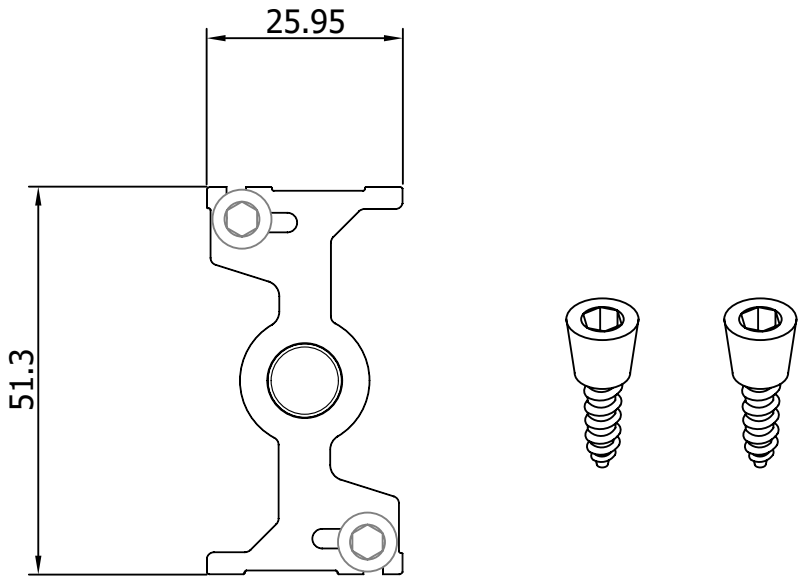


BR-SC1
Spring Cleat for One Peice Transom
+ 2No. Fixing Screws Per Cleat

For Further Information Refer
To Brital Technical Department

## Section21 - Cleat & Spigots

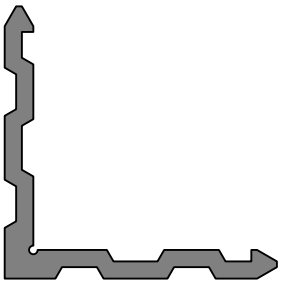

(Cut from section BR-15005)
CUT 28.5mm LONG - CLEAT TYPE BR-C1
CUT 6.5mm LONG - CLEAT TYPE BR-C4
CUT 26.6mm LONG - CLEAT TYPE BR-C6
CUT 10.3mm LONG - CLEAT TYPE BR-C49
CUT 49.3mm LONG - CLEAT TYPE BR-C53
CUT 15.1mm LONG - CLEAT TYPE BR-C56

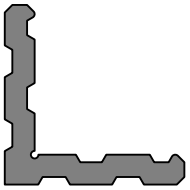

(Cut from section BR-TT09)
CUT 27.8mm LONG - CLEAT TYPE BR-C5

---

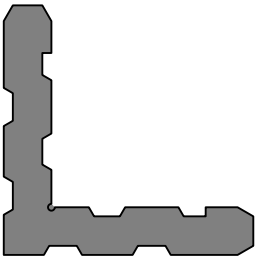

(Cut from section BR-TT69)
CUT 19.5mm LONG - CLEAT TYPE BR-C54
CUT 48.8mm LONG - CLEAT TYPE BR-C66

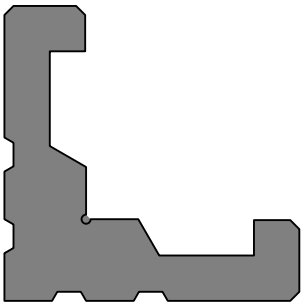

(Cut from section BR-TT26)
CUT 21.3mm LONG - CLEAT TYPE BR-C64
CUT 18.3mm LONG - CLEAT TYPE BR-C65

---

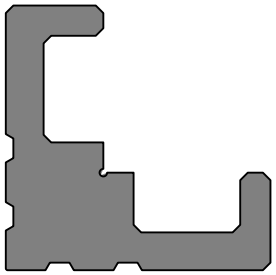

(Cut from section BR-TT77)
CUT 31.9mm LONG - CLEAT TYPE BR-C63
CUT 48.8mm LONG - CLEAT TYPE BR-C67
CUT 18.3mm LONG - CLEAT TYPE BR-C68

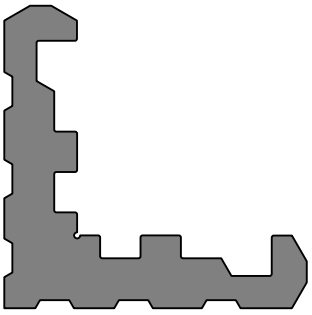

(Cut from section BR-15006)
CUT 26.6mm LONG - CLEAT TYPE BR-C2
CUT 34.8mm LONG - CLEAT TYPE BR-C60

## Section22 - Tie Back Bracket Components

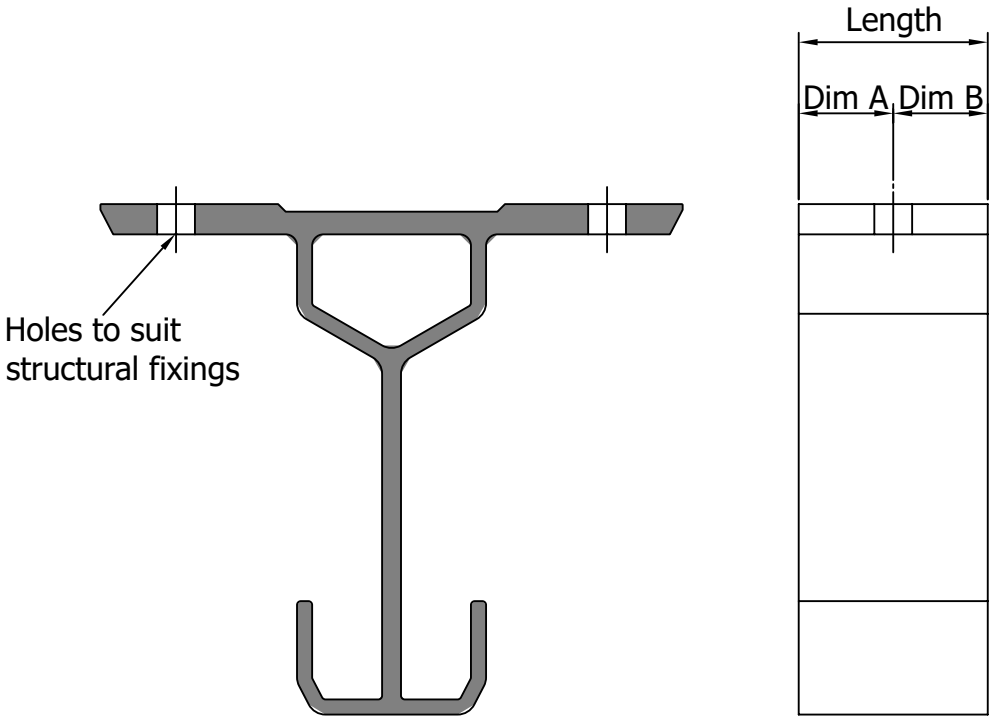


Mullion Head Spigot

BR-MS1 = Length 30mm ( for Mullion BR-M7 )
BR-MS2 = Length 50mm ( for Mullion BR-M6 )
BR-MS3 = Length 90mm ( for Mullion BR-M5 )
BR-MS4 = Length 100mm ( for Mullion BR-M4 )
BR-MS5 = Length 122mm ( for Mullion BR-M3 )
BR-MS6 = Length 140mm ( for Mullion BR-M1, BR-M2 & BR-M200 )
BR-MS7 = Length 68mm ( for Mullion BR-M181 )
BR-M201= Length 174mm ( for Mullion BR-M201 )

Tolerance on cut lengths ±0.5mm
Ends cut square

NOTE :- Mullion Head Spigot cut from Section No. BR-MS

## Section22 - Tie Back Bracket Components

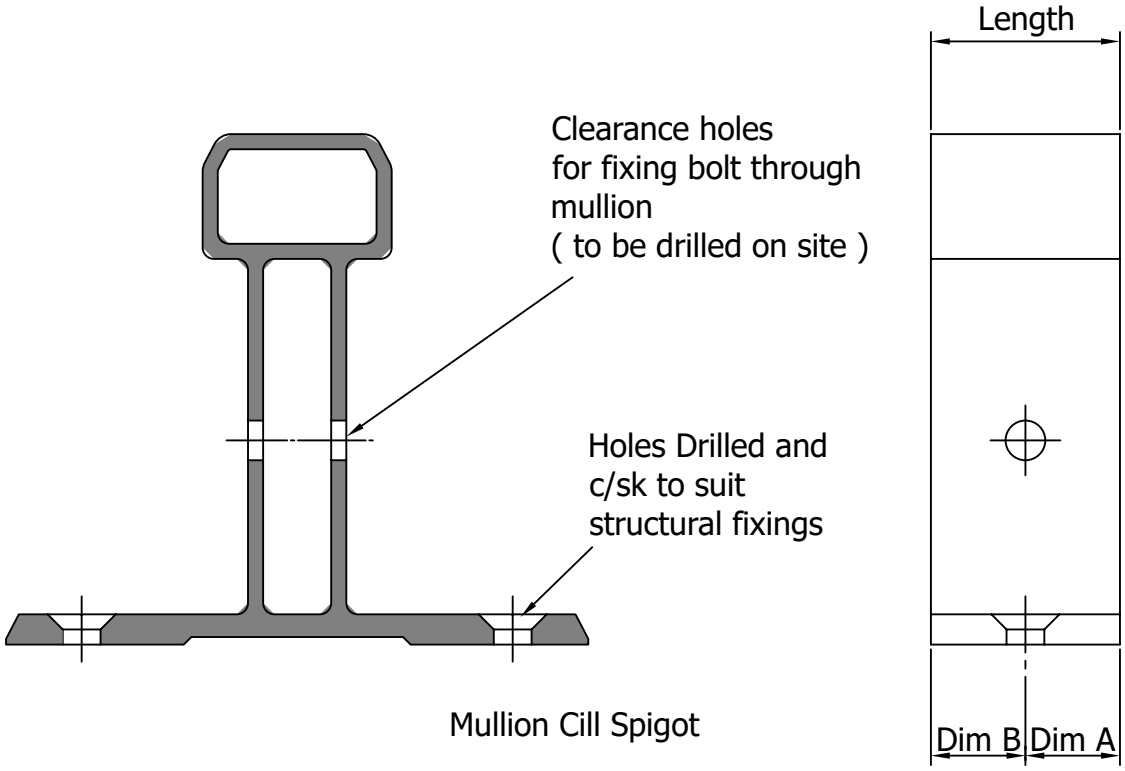


BR-MSC1 = Length 30mm ( for Mullion BR-M7 )
BR-MSC2 = Length 50mm ( for Mullion BR-M6 )
BR-MSC3 = Length 90mm ( for Mullion BR-M5 )
BR-MSC4 = Length 100mm ( for Mullion BR-M4 )
BR-MSC5 = Length 122mm ( for Mullion BR-M3 )
BR-MSC6 = Length 140mm ( for Mullion BR-M1, BR-M2, & BR-M200 )
BR-MSC7 = Length 68mm ( for Mullion BR-M181 )
BR-MSC8 = Length 174mm ( for Mullion BR-M201 )

Tolerance on cut lengths ±0.5mm
Ends cut square

NOTE :- Mullion Cill Spigot cut from Section No. BR-MSC

## Section22 - Tie Back Bracket Components

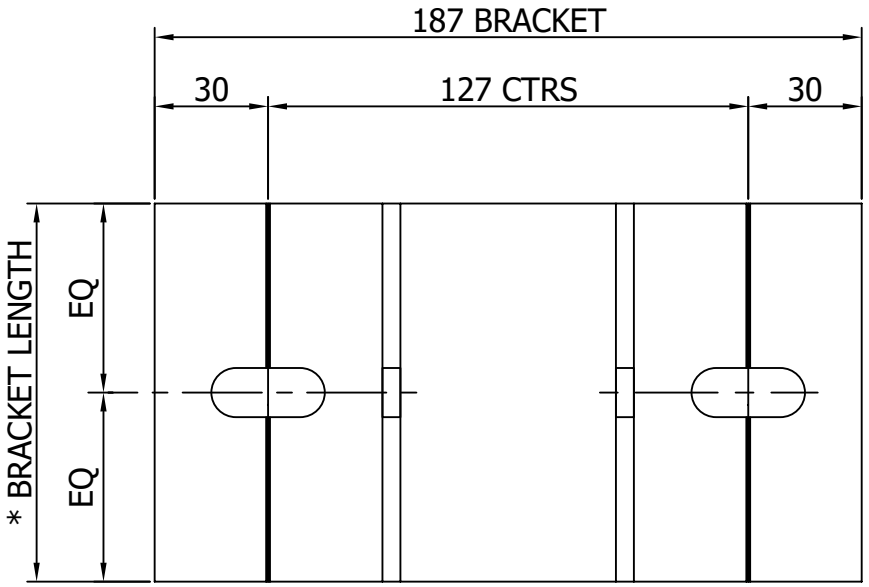


Note!
* Length of mullion bracket is subject to structural design

NOTE :- Extruded Mullion Bracket cut from Section No. BR-MB1

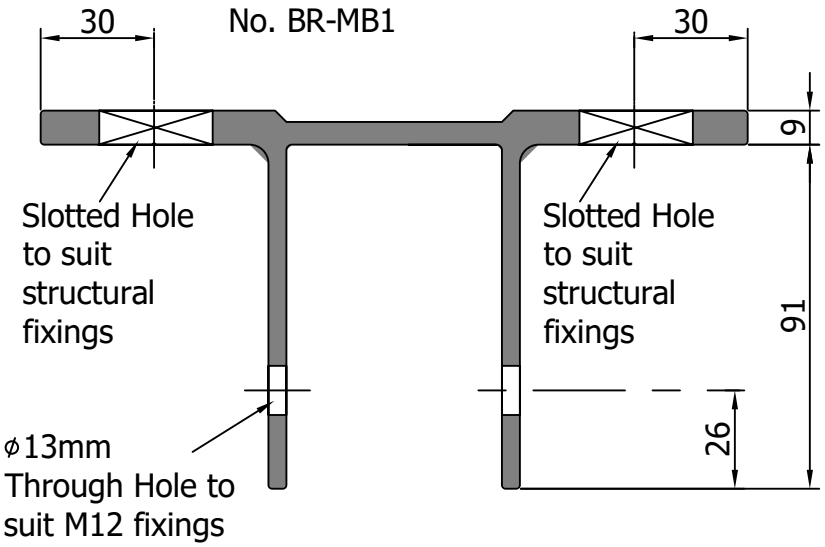


BR-MB2 = * Bracket Length 100mm ( for Mullion No. BR-M7, BR-M6, BR-M181, BR-M5, BR-M4, BR-M3, BR-M2, BR-M1, BR-M200, & BR-M201 )

## Section22 - Tie Back Bracket Components

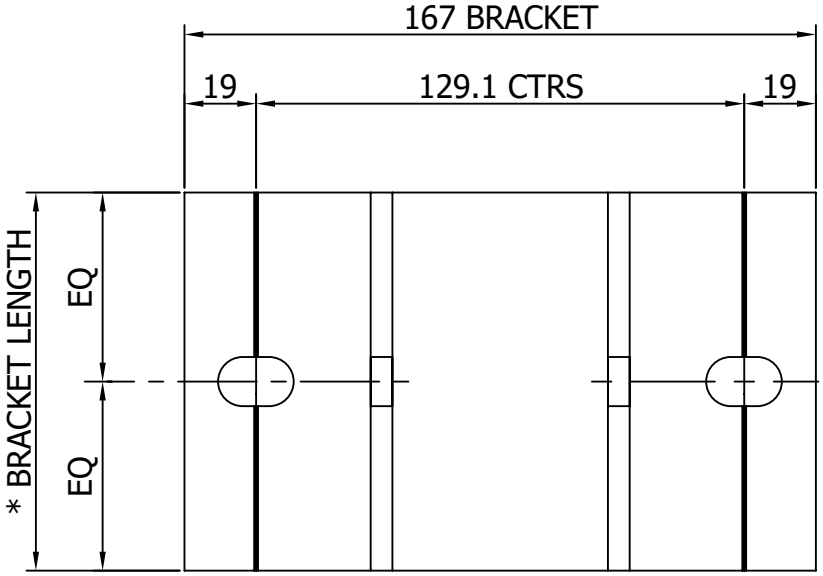


Note!
* Length of mullion bracket is subject to structural design

NOTE :- Extruded Mullion Bracket cut from Section No. BR-MB5

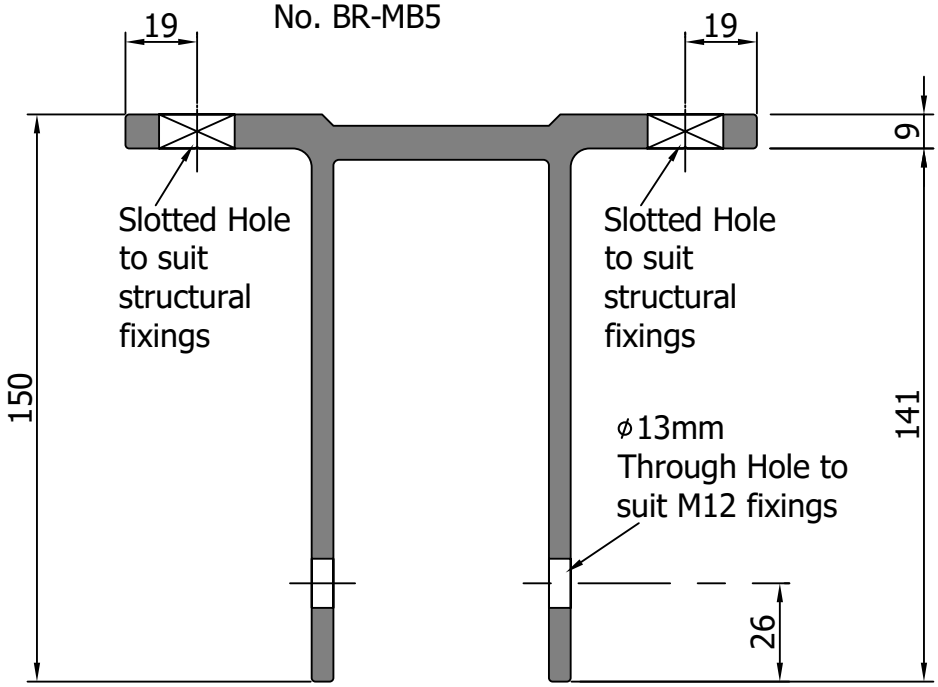


BR-MB6 = * Bracket Length 100mm ( for Mullion No. BR-M7, BR-M6, BR-M181, BR-M5, BR-M4, BR-M3, BR-M2, BR-M1, BR-M200, & BR-M201 )

## Section22 - Tie Back Bracket Components

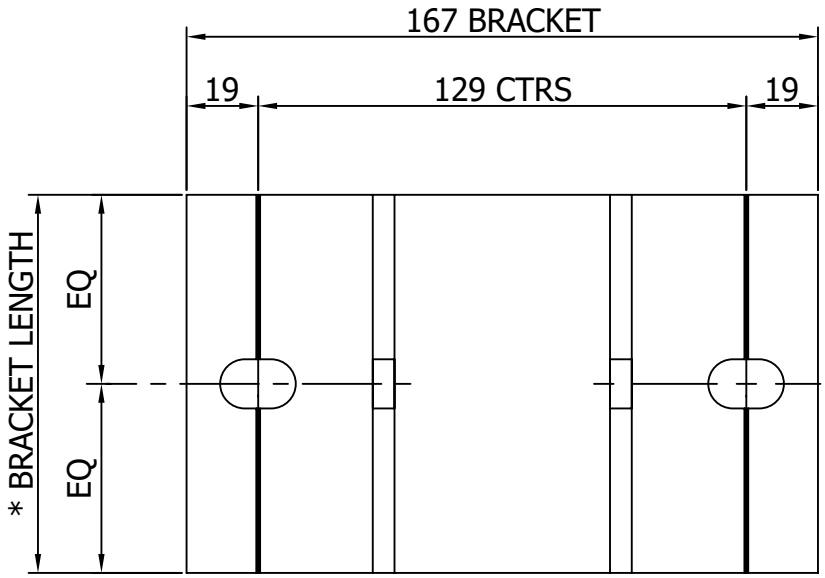


Note!
* Length of mullion bracket is subject to structural design

NOTE :- Extruded Mullion Bracket cut from Section No. BR-MB20

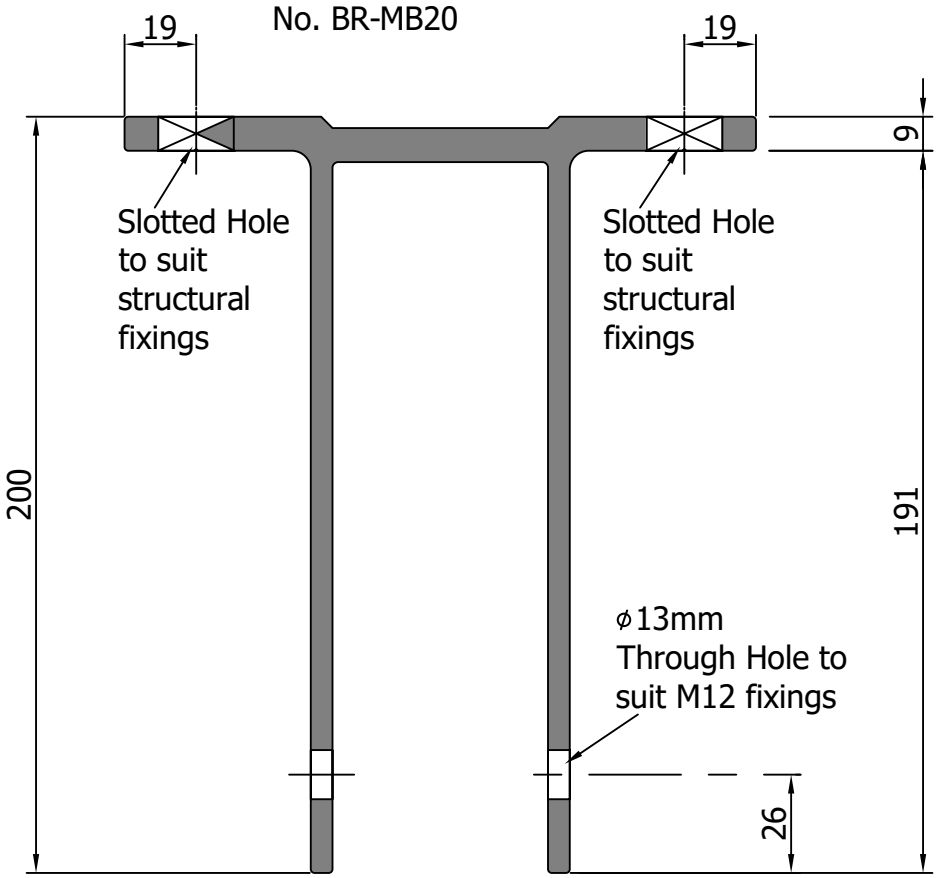

## Section22 - Tie Back Bracket Components

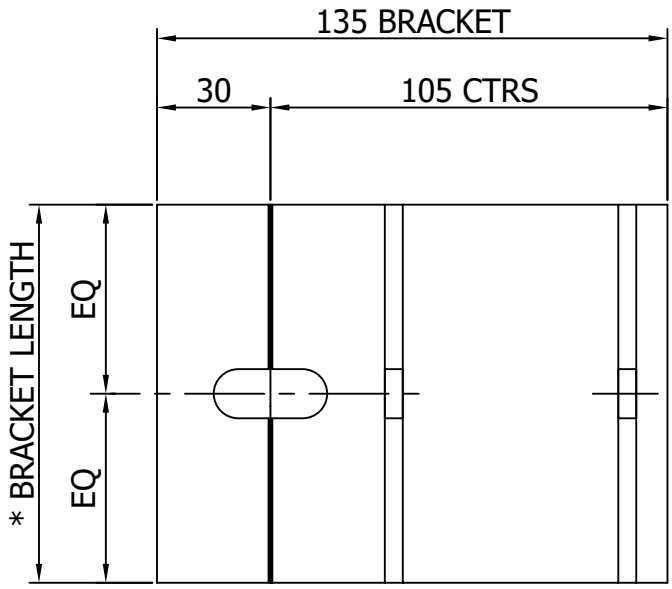


Note!
* Length of mullion bracket is subject to structural design

NOTE :- Extruded Mullion Bracket cut from Section No. BR-MB1

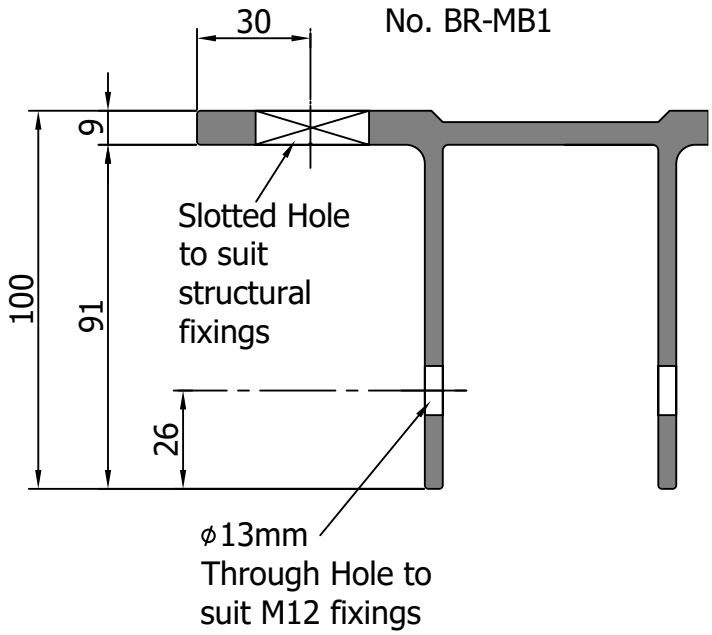


BR-MB3 = * Bracket Length 100mm ( for Mullion No. BR-M7, BR-M6, BR-M181, BR-M5, BR-M4, BR-M3, BR-M2, BR-M1, BR-M200, & BR-M201 )

## Section22 - Tie Back Bracket Components

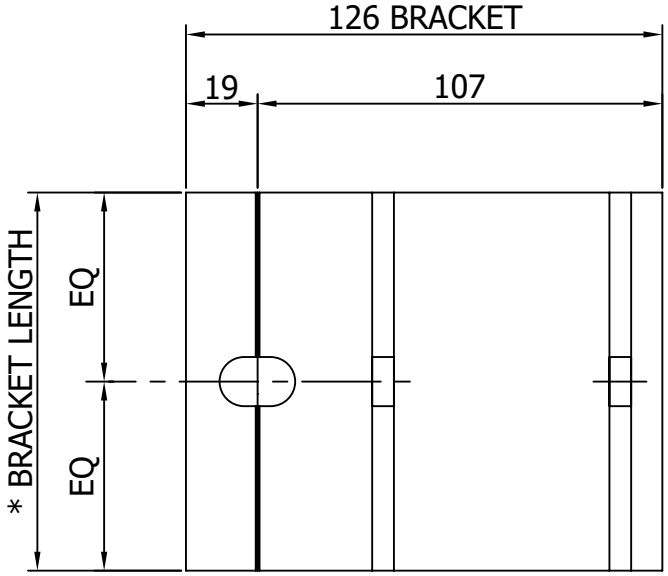


Note!
* Length of mullion bracket is subject to structural design

NOTE :- Extruded Mullion Bracket cut from Section No. BR-MB5

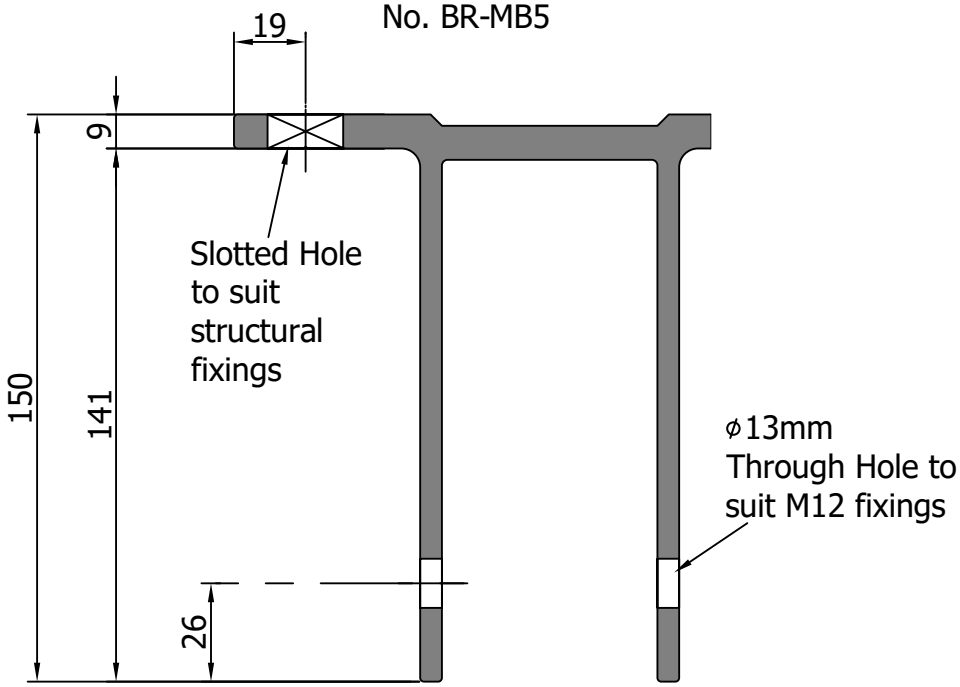


BR-MB7 = * Bracket Length 100mm ( for Mullion No. BR-M7, BR-M6, BR-M181, BR-M5, BR-M4, BR-M3, BR-M2, BR-M1, BR-M200, & BR-M201 )

## Section22 - Tie Back Bracket Components

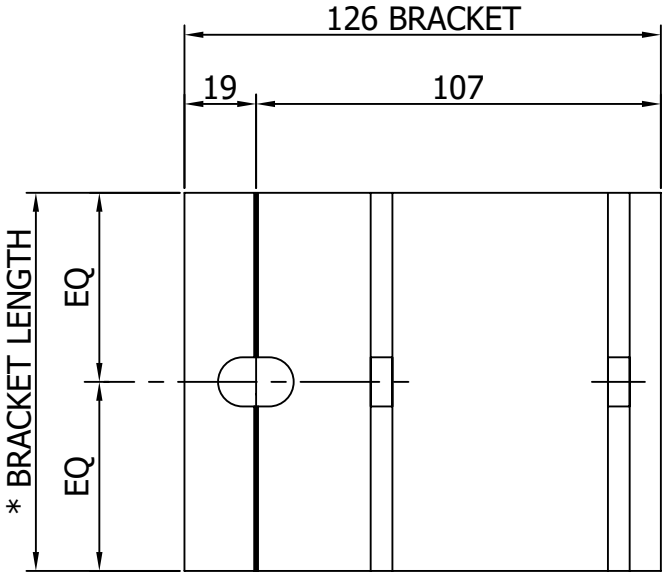


Note!
* Length of mullion bracket is subject to structural design

NOTE :- Extruded Mullion Bracket cut from Section No. BR-MB20

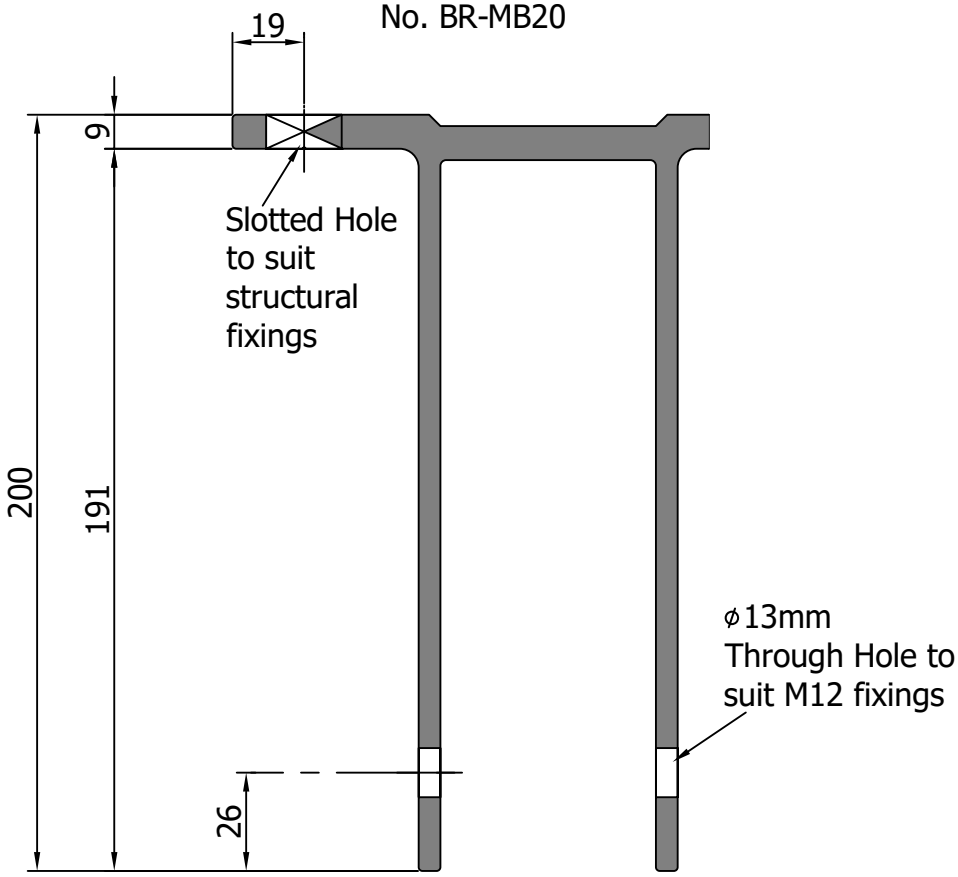

## Section22 - Tie Back Bracket Components

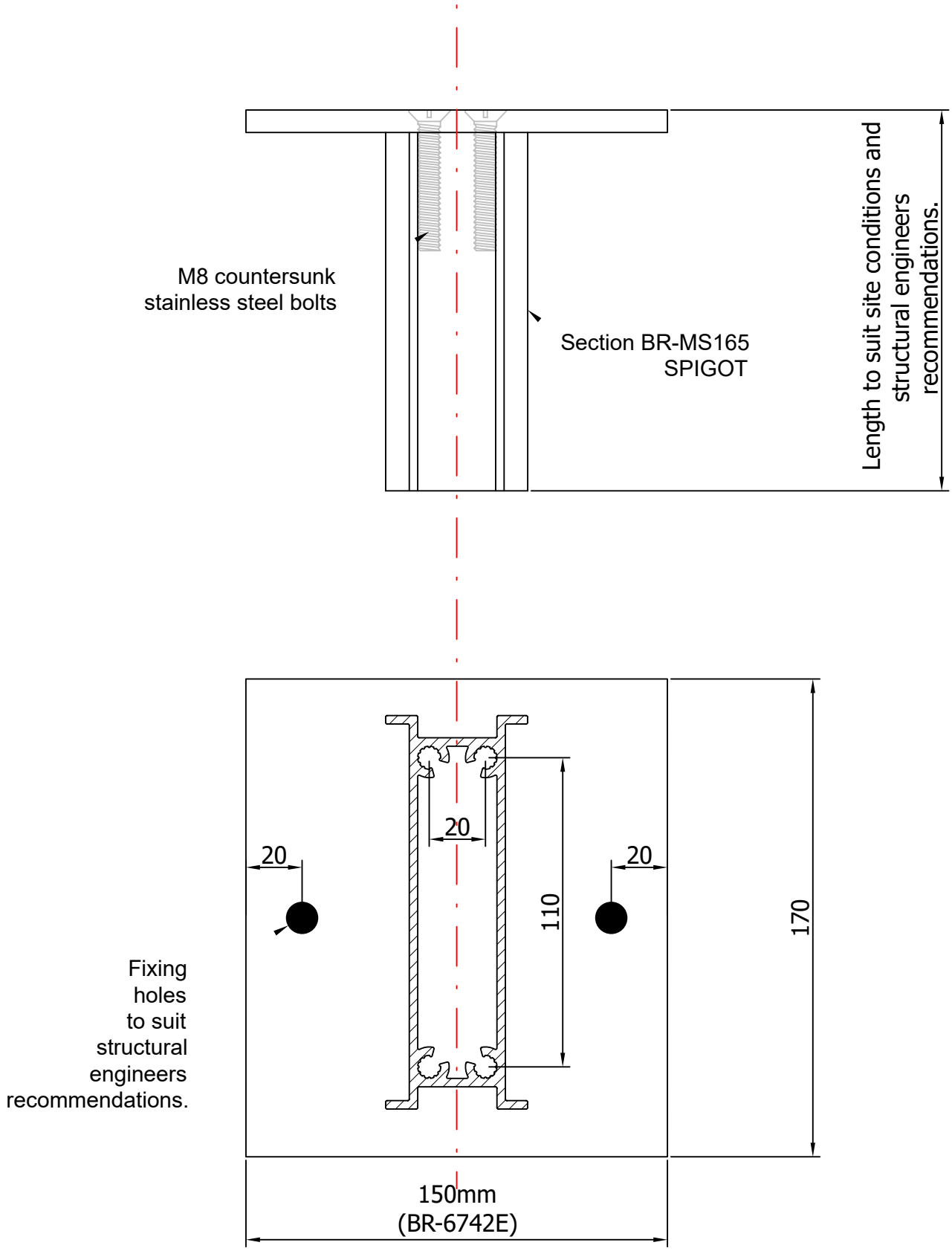

## Section23 - Frameless, Shutter Fittings & Ironmongery

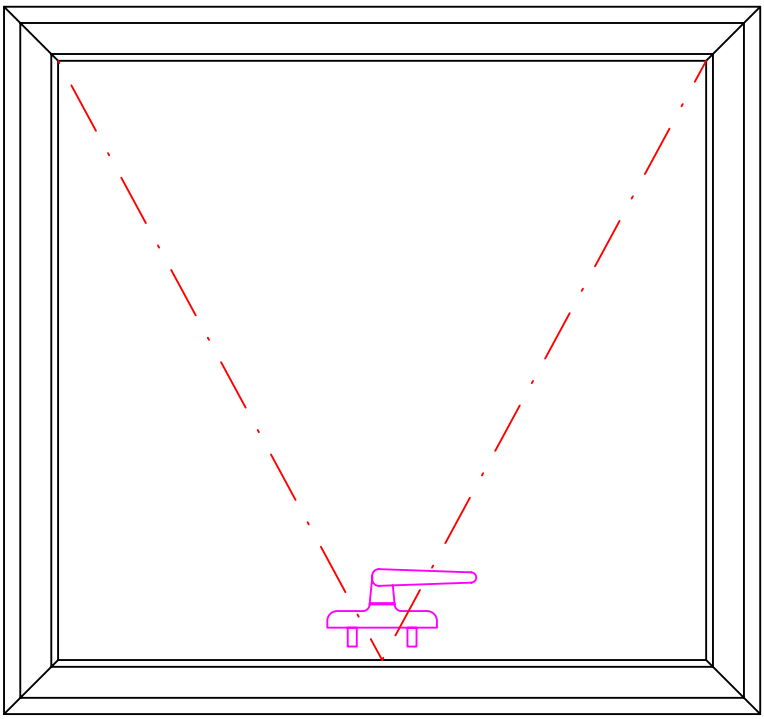

Maximum Sizes Limits.(top hung opening)

| Hinge Referance | Hinge Length (mm) | Opening Angle | Maximum Height (mm) | Maximum Width (mm) | Maximum Weight (kg) |
|---|---|---|---|---|---|
| BR-1206.10 | 260.5 | 35 (45) | 450/600 | 1200 | 50 (36) |
| BR-1206.12 | 311.0 | 30 (40) | 601/800 | 1200 | 70 (43) |
| BR-1206.14 | 349.5 | 30 (40) | 801/1000 | 1200 | 80 (50) |
| BR-1206.16 | 410.5 | 25 (35) | 1001/1200 | 1200 | 95 (65) |
| BR-1206.18 | 458.5 | 25 (35) | 1201/1400 | 1500 | 108 (78) |
| BR-1206.20 | 509.5 | 20 (30) | 1401/1600 | 1600 | 115 (90) |
| BR-1206.22 | 555.5 | 20 (30) | 1601/1800 | 1600 | 120 (100) |
| BR-1206.24 | 599.5 | 20 (25) | 1601/1800 | 1600 | 130 (120) |
| BR-1206.28 | 713.0 | 10 (20) | 1801/2000 | 1600 | 145 (140) |
| BR-1206.28 | 713.0 | 10 | 2001/2500* | 1200 | 120 |

*For W indows O ver 2000mm High, Window MUST b e Restricted Using The Design Limiter Arm - SEE PAGE 23/17

Note: The opening a ngle may be increased t o the value shown in t he brackets provided t hat the maximum weight is reduced to the value in brackets in the maximum weight column.

| | Height Up To 1500mm | Height Over 1500mm |
|---|---|---|
| Hinges as Table | 1No. | 1No. |
| BR-6006.1 Handle | 1No. | 1No. |
| BR-1252.4 Angle Keep | 4No. | 8No. |
| BR-4246 Locking | 4No. | 8No. |
| BR-1205.3 Restrictor | 1No. | 1No. |
| BR-1252.5 Corner Trans | - | 2No. |

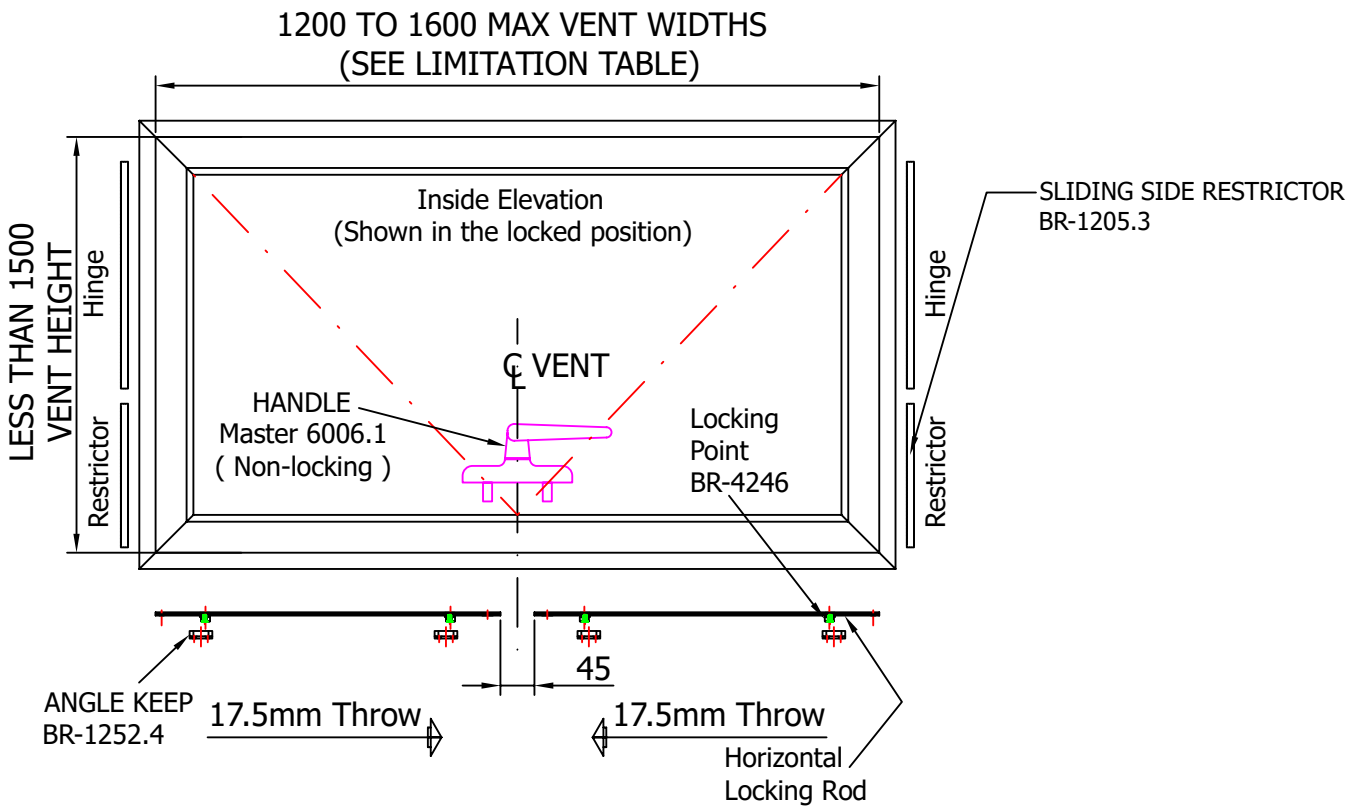
1200 TO 1600 MAX VENT WIDTHS
(SEE LIMITATION TABLE)
LESS THAN 1500
VENT HEIGHT
Hinge
Restrictor
Inside Elevation
(Shown in the locked position)
℄ VENT
HANDLE
Master 6006.1
( Non-locking )
Locking
Point
BR-4246
SLIDING SIDE RESTRICTOR
BR-1205.3
Hinge
Restrictor
45
ANGLE KEEP
BR-1252.4
17.5mm Throw
17.5mm Throw
Horizontal
Locking Rod

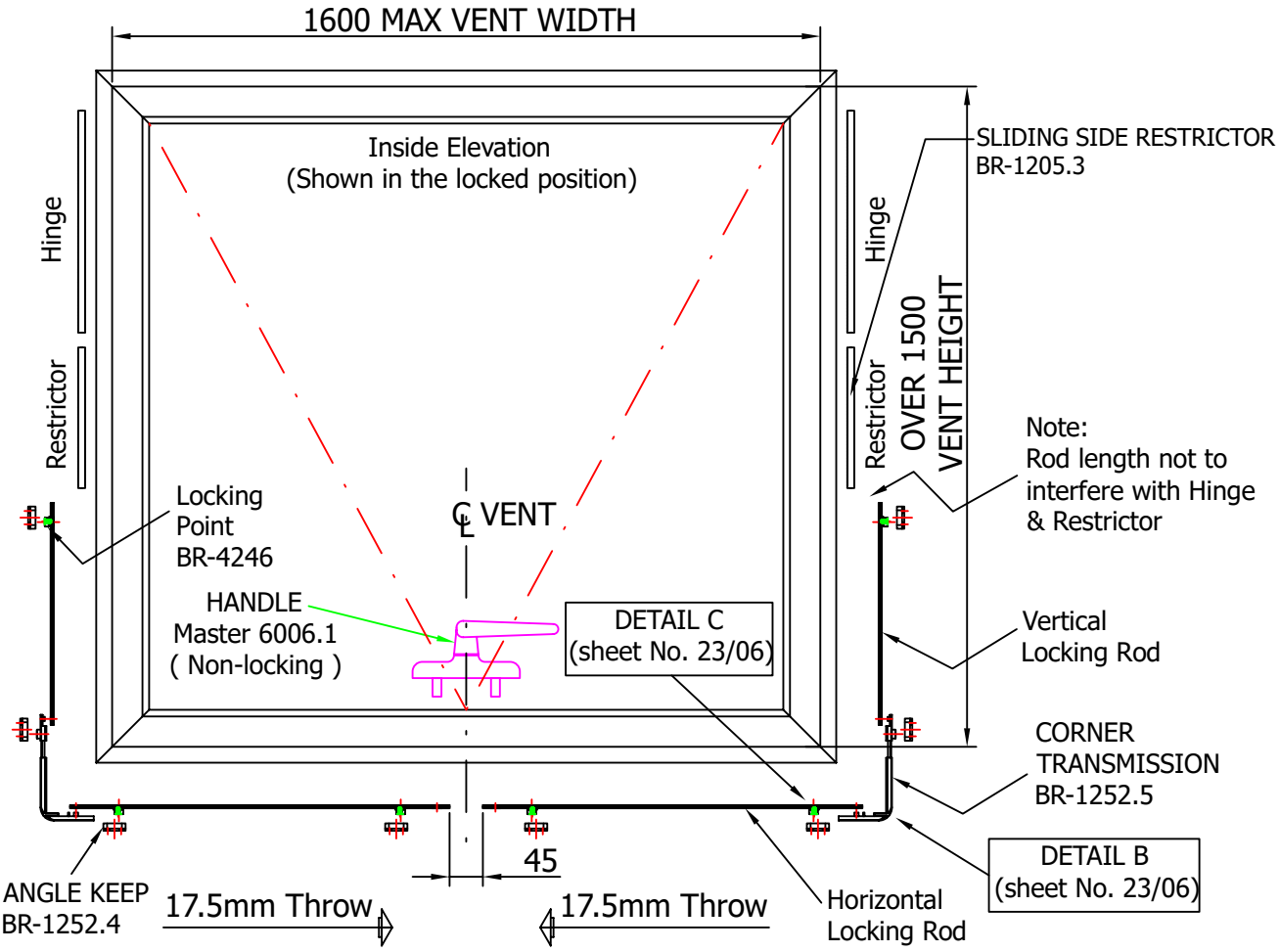
1600 MAX VENT WIDTH
Inside Elevation
(Shown in the locked position)
Hinge
Restrictor
SLIDING SIDE RESTRICTOR
BR-1205.3
Hinge
Restrictor
OVER 1500
VENT HEIGHT
Note:
Rod length not to
interfere with Hinge
& Restrictor
Locking
Point
BR-4246
℄ VENT
HANDLE
Master 6006.1
( Non-locking )
DETAIL C
(sheet No. 23/06)
Vertical
Locking Rod
CORNER
TRANSMISSION
BR-1252.5
DETAIL B
(sheet No. 23/06)
45
ANGLE KEEP
BR-1252.4
17.5mm Throw
17.5mm Throw
Horizontal
Locking Rod

## Section23 - Frameless, Shutter Fittings & Ironmongery

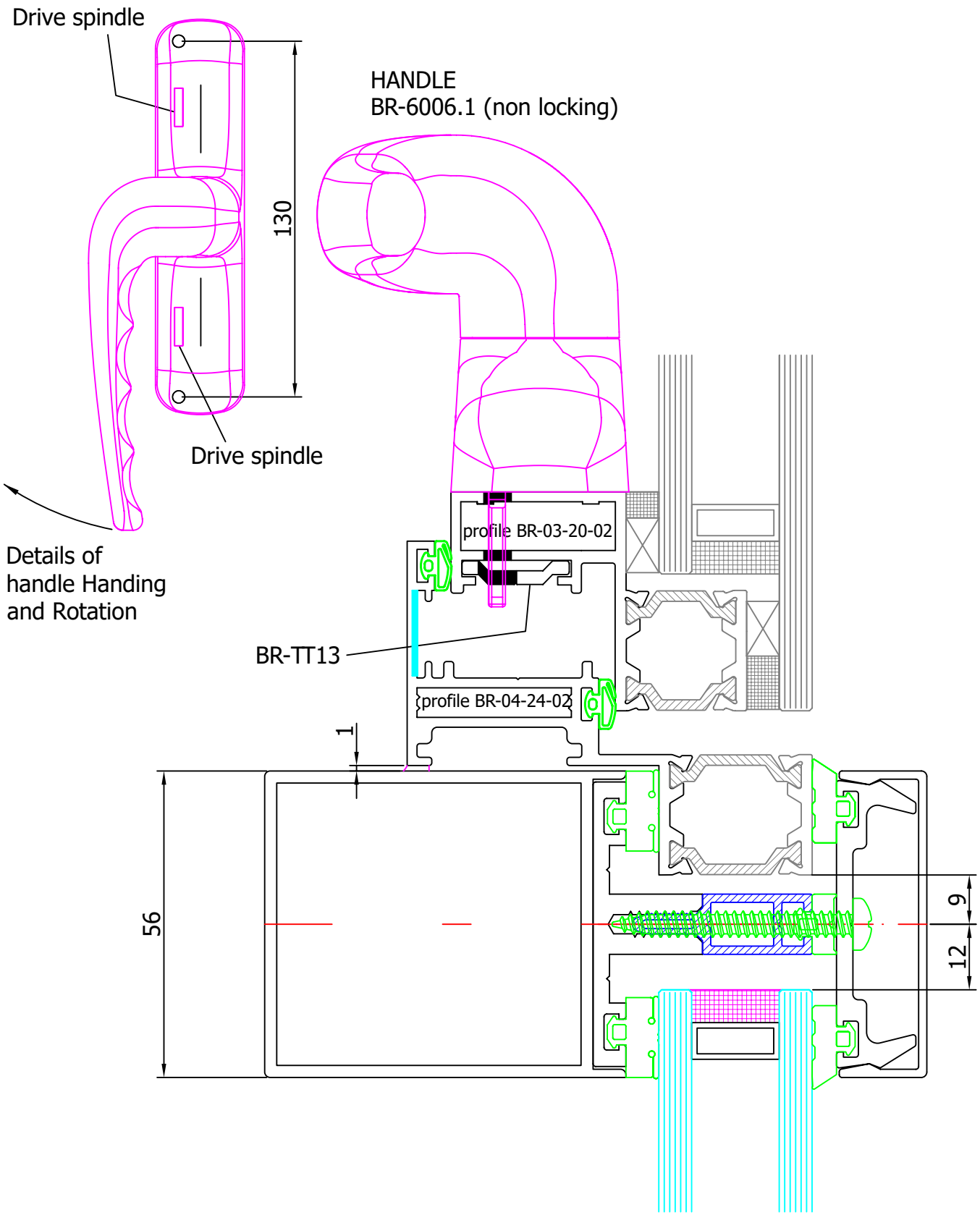

## Section23 - Frameless, Shutter Fittings & Ironmongery

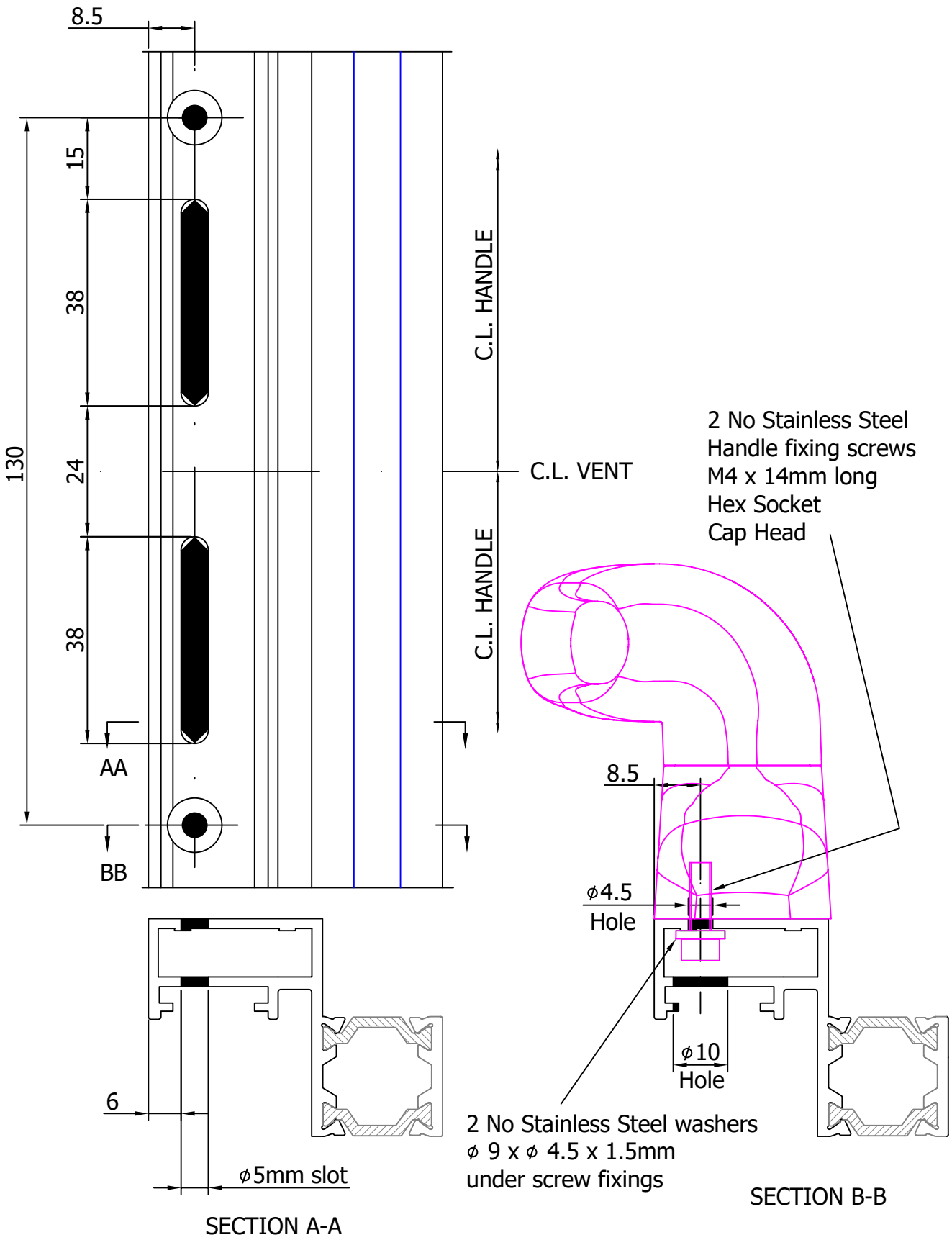

## Section23 - Frameless, Shutter Fittings & Ironmongery

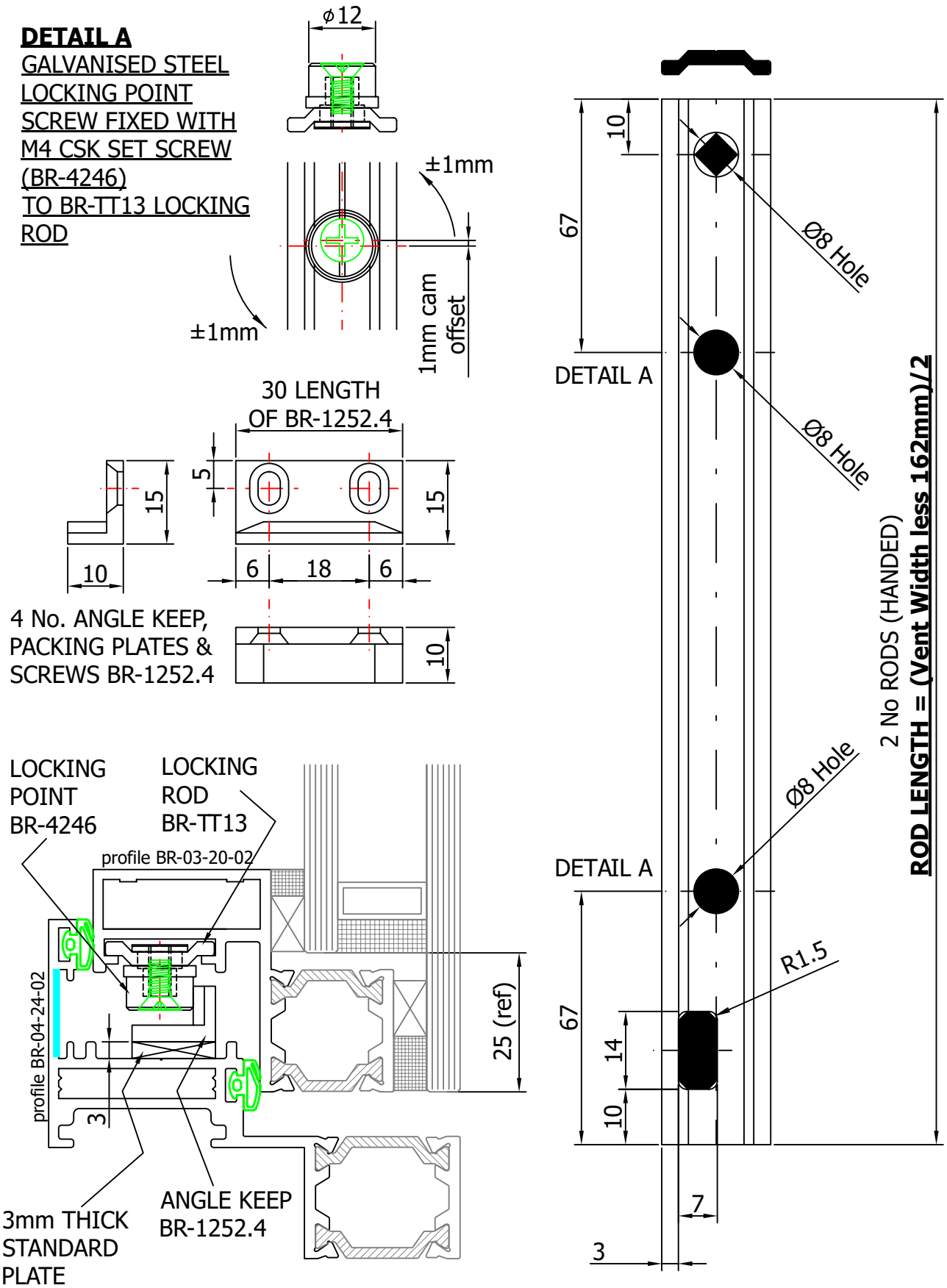

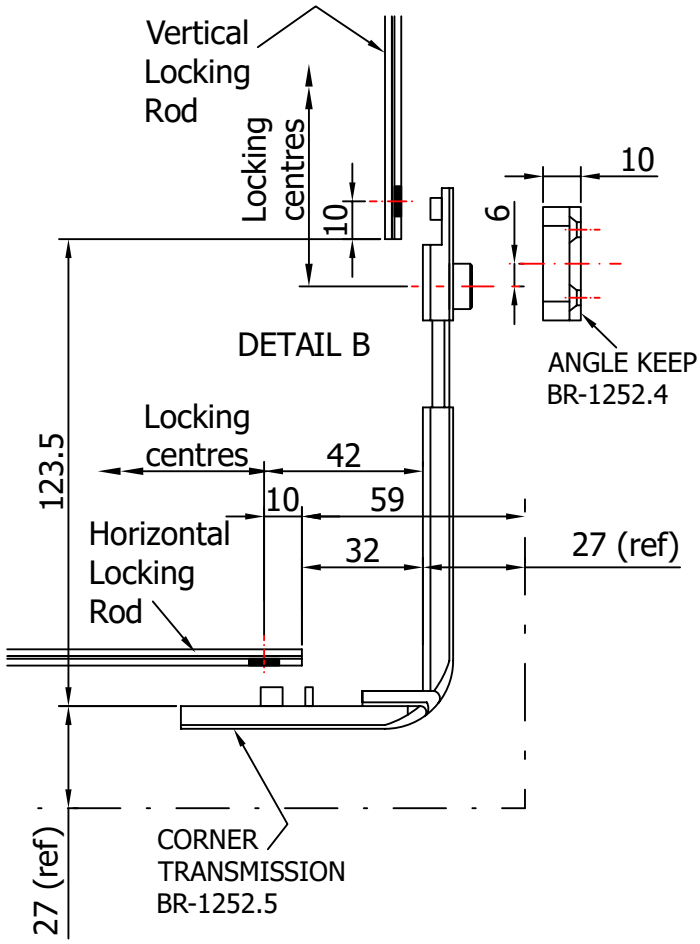
Vertical
Locking
Rod
Locking
centres
10
10
6
DETAIL B
ANGLE KEEP
BR-1252.4
123.5
Locking
centres
42
10
59
Horizontal
Locking
Rod
32
27 (ref)
27 (ref)
CORNER
TRANSMISSION
BR-1252.5

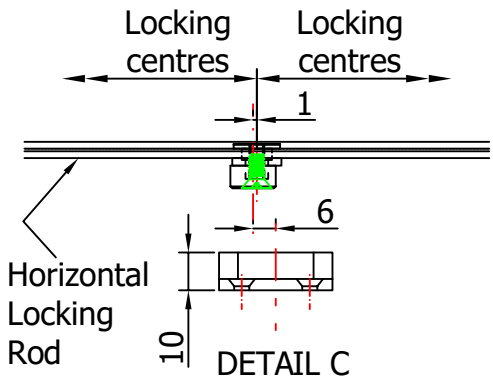
Locking
centres
Locking
centres
1
6
Horizontal
Locking
Rod
10
DETAIL C

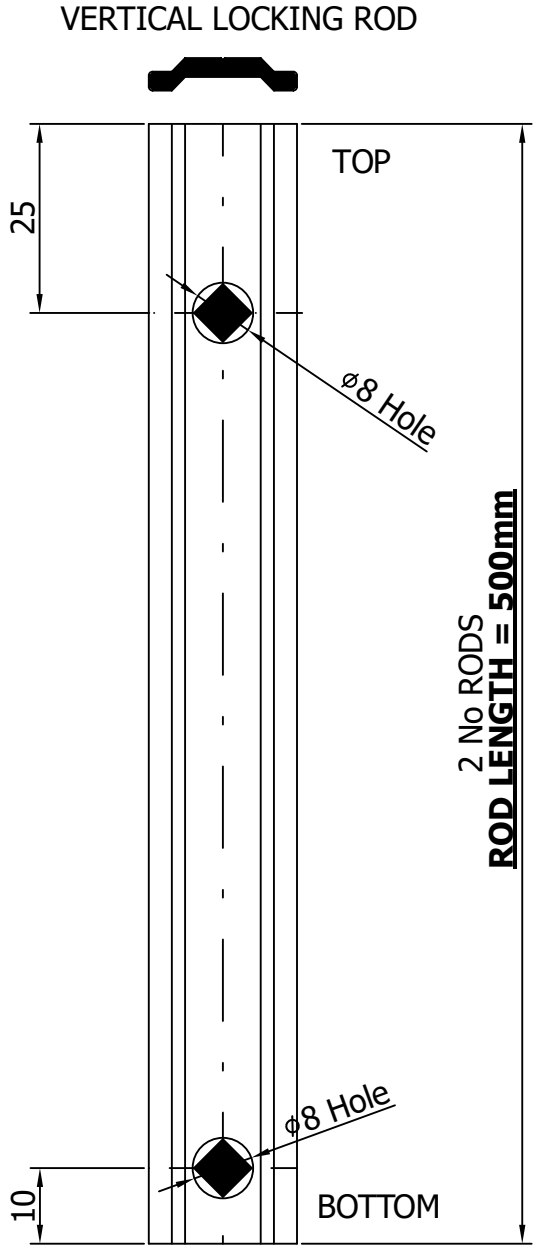
VERTICAL LOCKING ROD
TOP
25
ø8 Hole
2 No RODS
ROD LENGTH = 500mm
ø8 Hole
10
BOTTOM

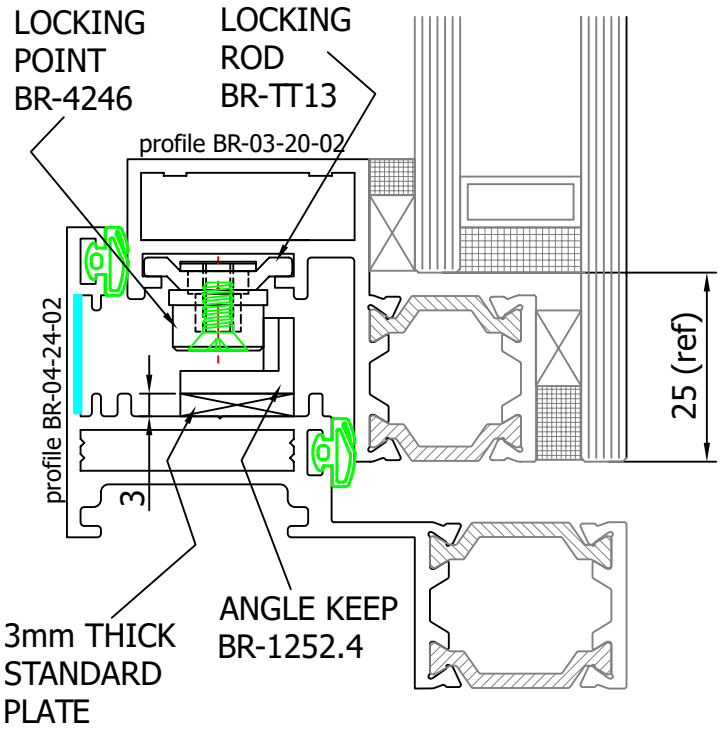
LOCKING
POINT
BR-4246
LOCKING
ROD
BR-TT13
profile BR-03-20-02
profile BR-04-24-02
3
25 (ref)
3mm THICK
STANDARD
PLATE
ANGLE KEEP
BR-1252.4

## Hinge Fitting Application Drawing

A) The hinges MUST be fitted between two flat and parallel faces. The distance between the two faces must be 17mm (+ or -1mm)

B) The hinge must be positioned as shown for optimum performance.

C) The hinge should be fitted with the end cap located into the internal corner of the outer frame. All fixing holes/slots MUST be used. This will ensure optimum performance and weather sealing.

## Fixings

Use stainless steel No10 x 16mm long Pan Head self tapping screws to fix vent arm & track .

Maximum head sizes for fixing screws 3.5mm deep & 10mm diameter

Maximum shank diameter 5mm

Screws in both arm & track should be Austenitic stainless steel (A2 or A4).

Use M5 Pan Head stainless steel screws and c/sk rivenuts when fixing track for vents weights over 35Kg see detail below. ( except where corner cleats are behind screw )

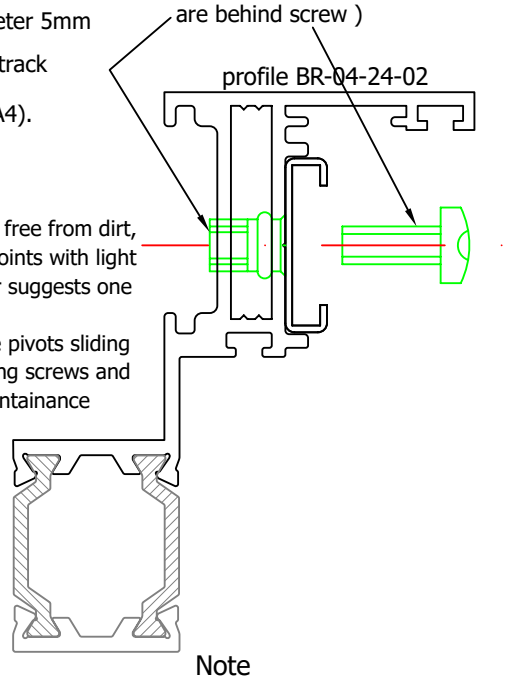


## Maintenance of Friction Stays

The hinge in general and particularly the pivots, sliding shoe and track must be kept free from dirt, debris and any obstructions at all times. At the time of installation lubricate all pivot points with light machine oil and wipe away excess - one drop per pivot is sufficient. The manufacturer suggests one of the following lubricants or equivalent :- ER Howard 3 in 1 oil or Castrol Everyman.
Every year clean any dirt or debris from the hinge and clear any obstructions from the pivots sliding shoe and track. Apply lubrication as above. Check the tightness and security of all fixing screws and rivets. For hinges fitted in corrosive areas i. e. coastal locations refer to additional maintainance recommended by manufacturer.

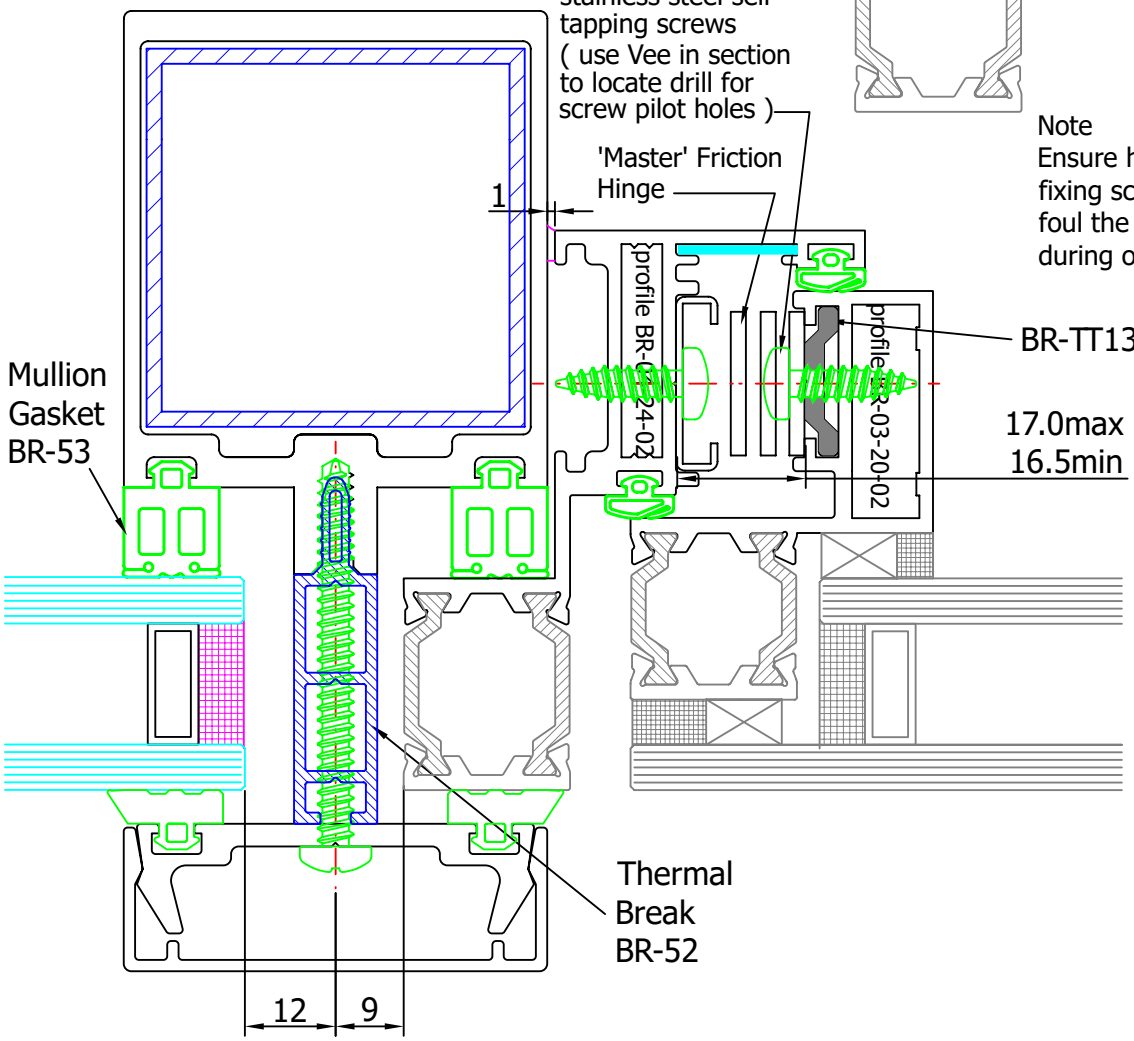


Note
Ensure heads of fixing screws do not foul the hinge during operation.

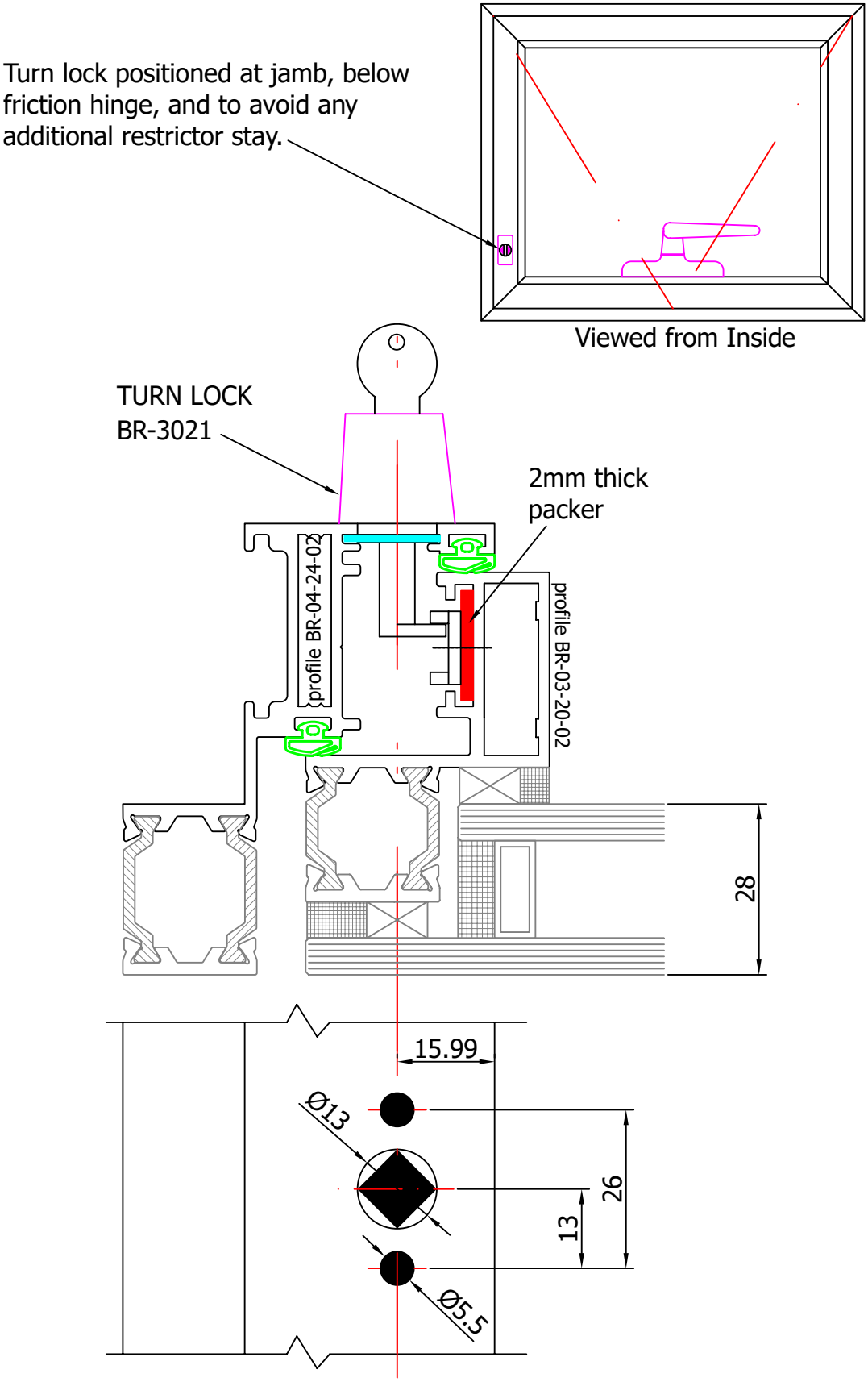
Turn lock positioned at jamb, below friction hinge, and to avoid any additional restrictor stay.
Viewed from Inside
TURN LOCK
BR-3021
2mm thick packer
profile BR-04-24-02
profile BR-03-20-02
28
15.99
Ø13
26
13
Ø5.5

## Section23 - Frameless, Shutter Fittings & Ironmongery

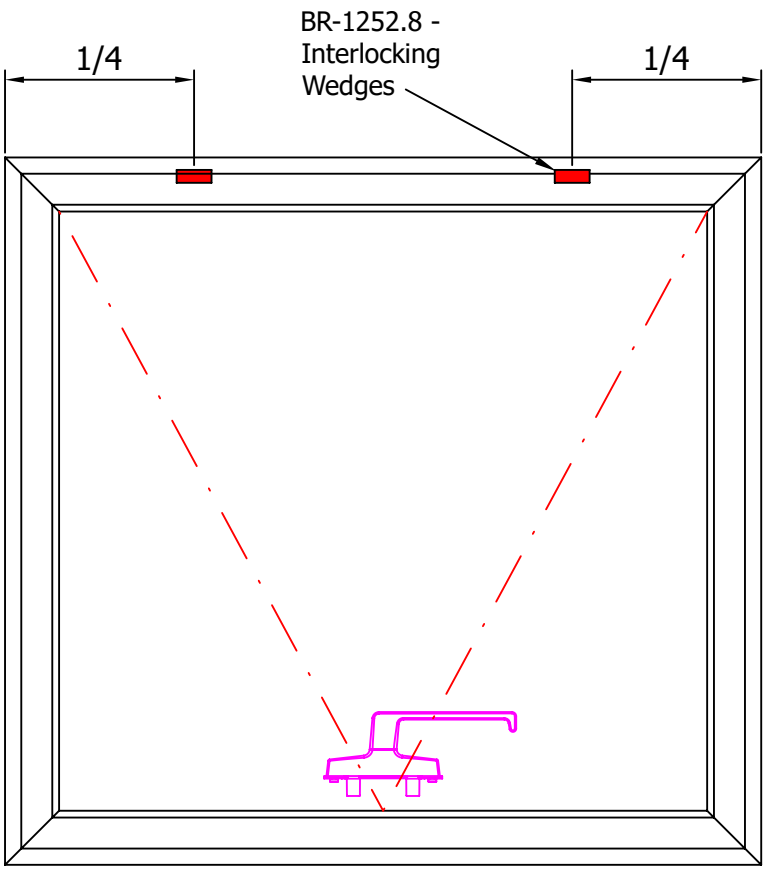


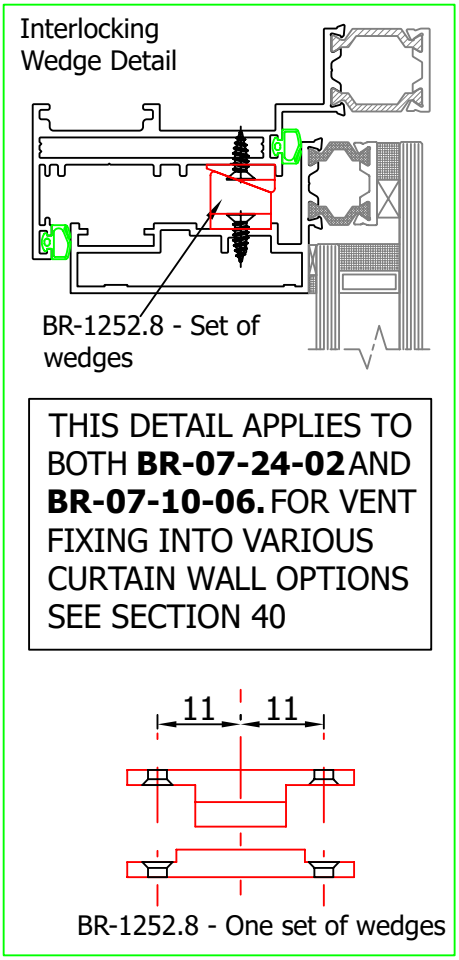


Maximum Sizes Limits.(top hung opening)

| Hinge Referance | Hinge Length (mm) | Opening Angle | Maximum Height (mm) | Maximum Width (mm) | Maximum Weight (kg) |
|---|---|---|---|---|---|
| BR-1206.10 | 260.5 | 35 (45) | 450/600 | 1200 | 50 (36) |
| BR-1206.12 | 311.0 | 30 (40) | 601/800 | 1200 | 70 (43) |
| BR-1206.14 | 349.5 | 30 (40) | 801/1000 | 1200 | 80 (50) |
| BR-1206.16 | 410.5 | 25 (35) | 1001/1200 | 1200 | 95 (65) |
| BR-1206.18 | 458.5 | 25 (35) | 1201/1400 | 1500 | 108 (78) |
| BR-1206.20 | 509.5 | 20 (30) | 1401/1600 | 1600 | 115 (90) |
| BR-1206.22 | 555.5 | 20 (30) | 1601/1800 | 1600 | 120 (100) |
| BR-1206.24 | 599.5 | 20 (25) | 1601/1800 | 1600 | 130 (120) |
| BR-1206.28 | 713.0 | 10 (20) | 1801/2000 | 1600 | 145 (140) |

Note: The opening angle may be increased to the value shown in the brackets provided that the maximum weight is reduced to the value in brackets in the maximum weight column.

| | Height Up To 1500mm | Height Over 1500mm |
|---|---|---|
| Hinges as Table | 1No. | 1No. |
| BR-6008.52 Handle | 1No. | 1No. |
| BR-6406.1 connector | 1No.(pair) | 1No.(pair) |
| BR-1252.4 Angle Keep | 4No. | 8No. |
| BR-4246 Locking | 4No. | 8No. |
| BR-1205.3 Restrictor | 1No. | 1No. |
| BR-1252.5 Corner Trans | - | 2No. |

For General Arrangement - Page 23/10
For Handle Detal - Page 23/11
For Handle Hole Prep - Page 23/12
For Horizontal Locking Rod - Page 23/13
For Vertical Locking Rod - Page 23/14
For Hinge Application - Page 23/15
For Lock Application - Page 23/16

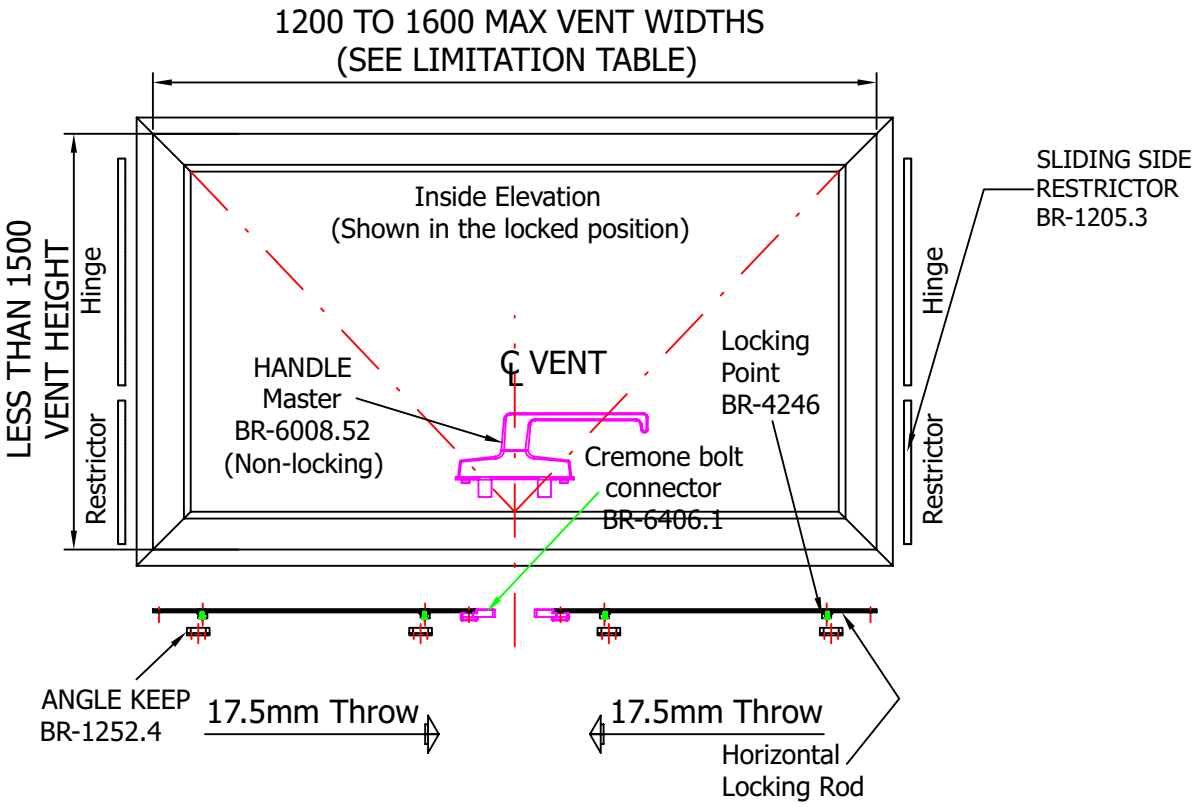
1200 TO 1600 MAX VENT WIDTHS
(SEE LIMITATION TABLE)
LESS THAN 1500
VENT HEIGHT
Hinge
Restrictor
Inside Elevation
(Shown in the locked position)
HANDLE
Master
BR-6008.52
(Non-locking)
℄ VENT
Locking
Point
BR-4246
Cremone bolt
connector
BR-6406.1
SLIDING SIDE
RESTRICTOR
BR-1205.3
Hinge
Restrictor
ANGLE KEEP
BR-1252.4
17.5mm Throw
17.5mm Throw
Horizontal
Locking Rod

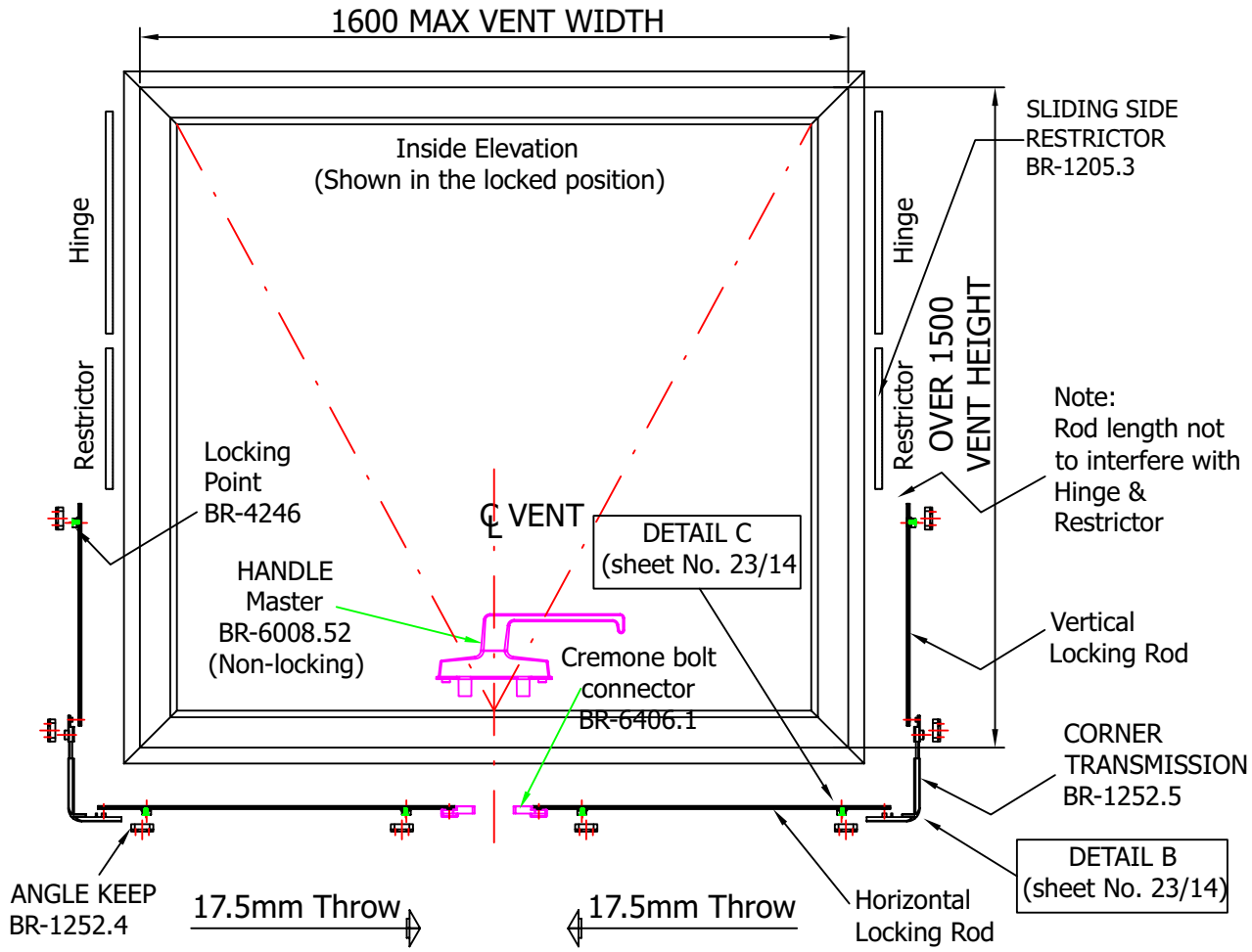
1600 MAX VENT WIDTH
Inside Elevation
(Shown in the locked position)
Hinge
Restrictor
Locking
Point
BR-4246
HANDLE
Master
BR-6008.52
(Non-locking)
℄ VENT
DETAIL C
(sheet No. 23/14
Cremone bolt
connector
BR-6406.1
SLIDING SIDE
RESTRICTOR
BR-1205.3
Hinge
Restrictor
OVER 1500
VENT HEIGHT
Note:
Rod length not
to interfere with
Hinge &
Restrictor
Vertical
Locking Rod
CORNER
TRANSMISSION
BR-1252.5
DETAIL B
(sheet No. 23/14)
ANGLE KEEP
BR-1252.4
17.5mm Throw
17.5mm Throw
Horizontal
Locking Rod

## Section23 - Frameless, Shutter Fittings & Ironmongery

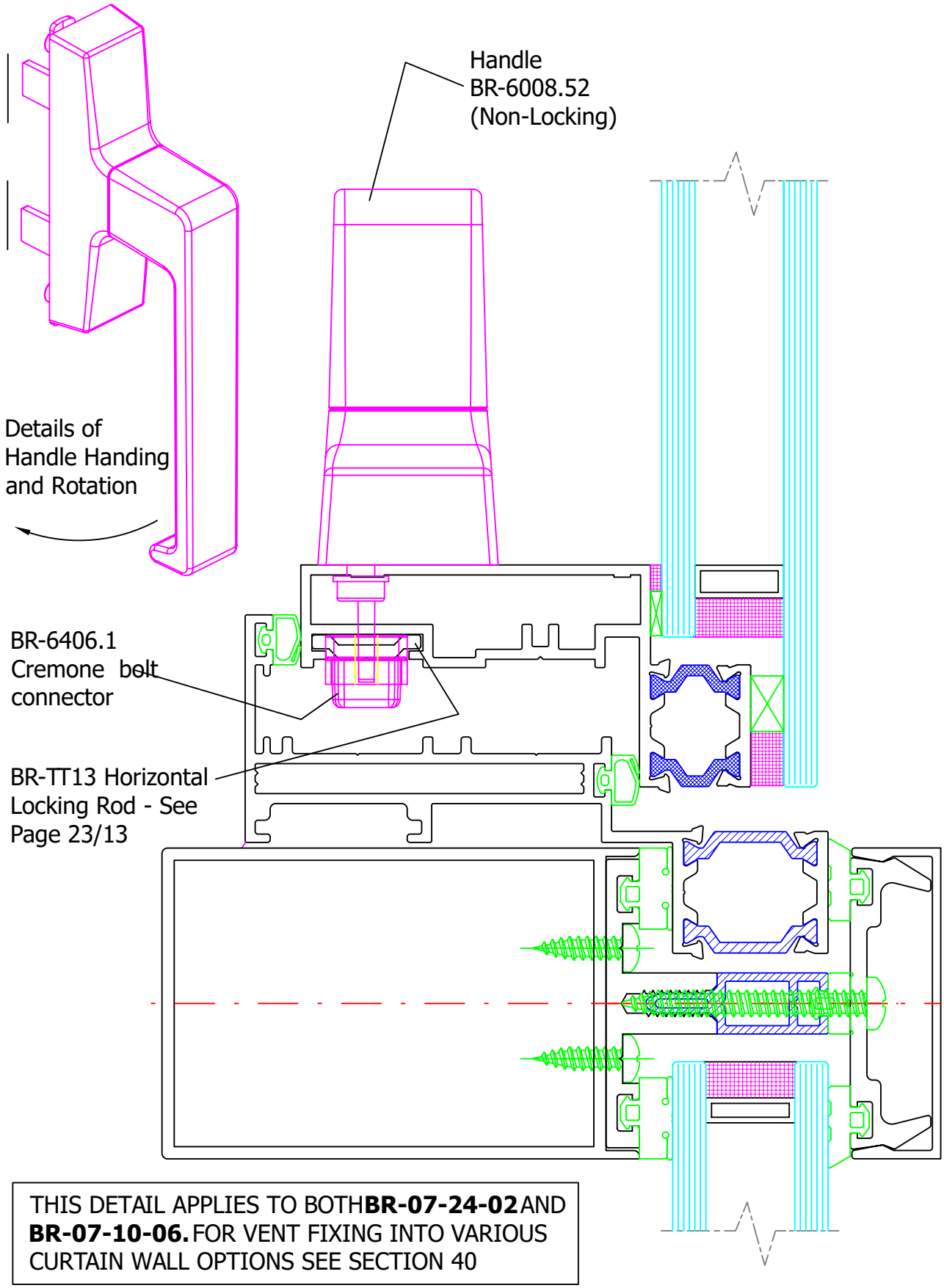


THIS DETAIL APPLIES TO BOTH **BR-07-24-02** AND **BR-07-10-06.** FOR VENT FIXING INTO VARIOUS CURTAIN WALL OPTIONS SEE SECTION 40

THIS DETAIL APPLIES TO BOTH **BR-07-24-02** AND **BR-07-10-06**. FOR VENT FIXING INTO VARIOUS CURTAIN WALL OPTIONS SEE SECTION 40

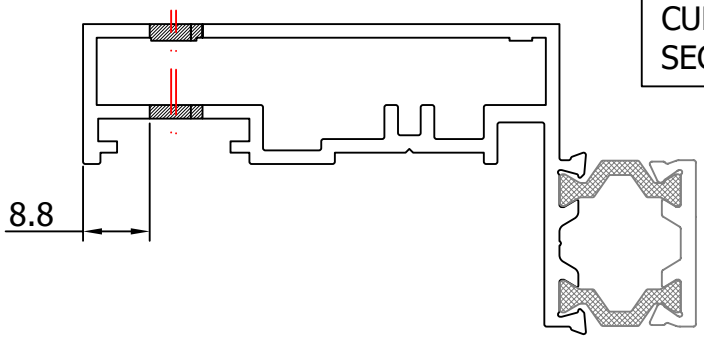


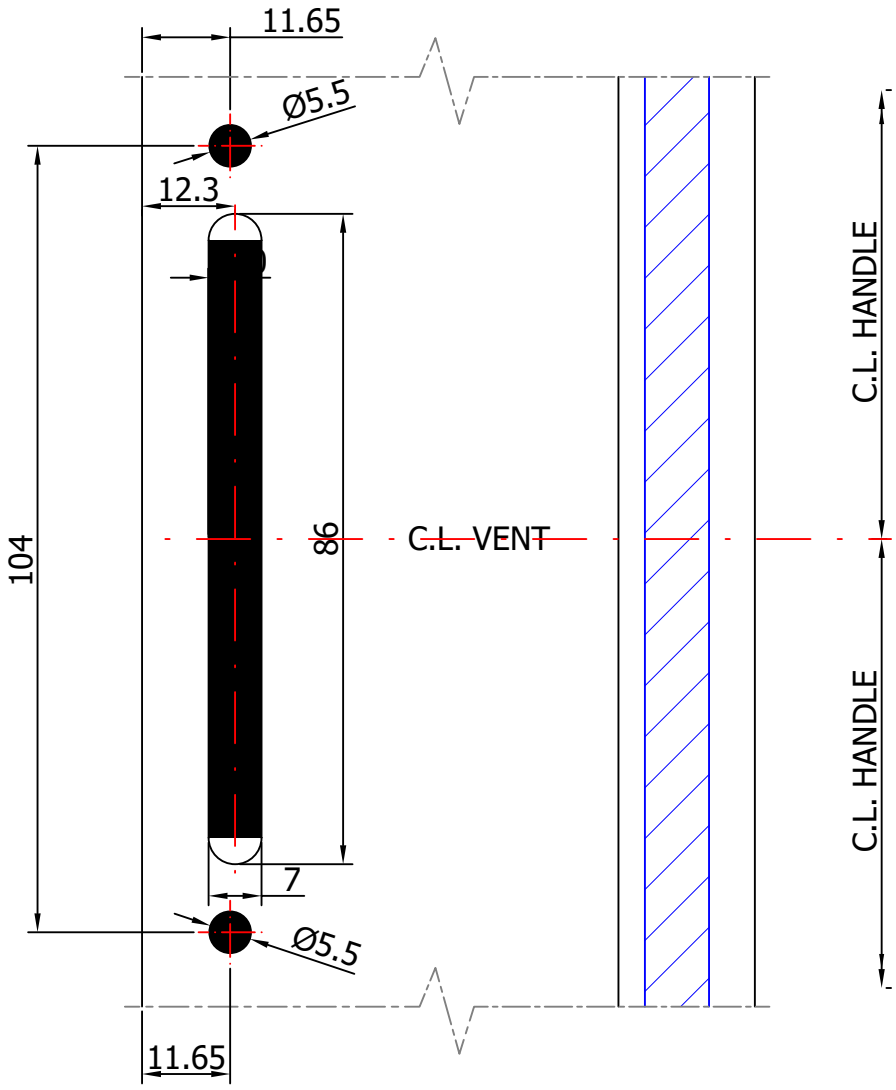

## Section23 - Frameless, Shutter Fittings & Ironmongery

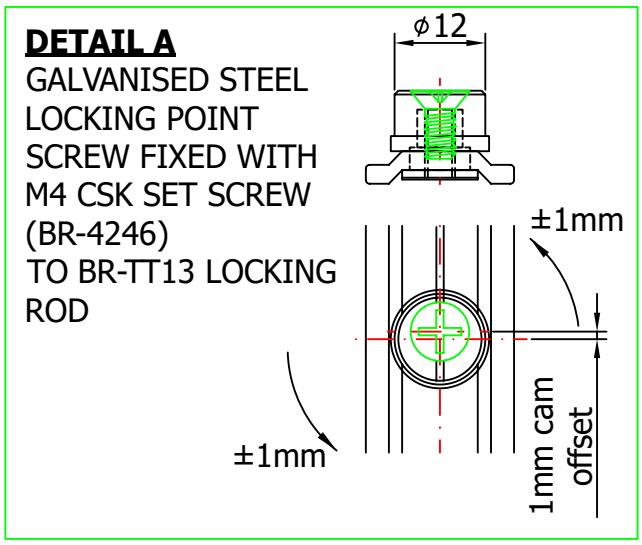


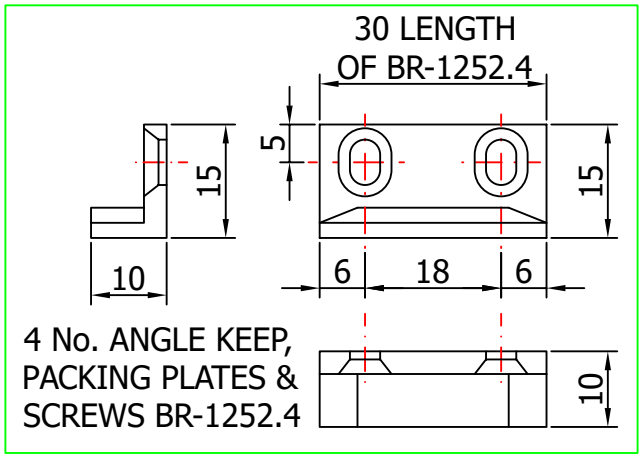


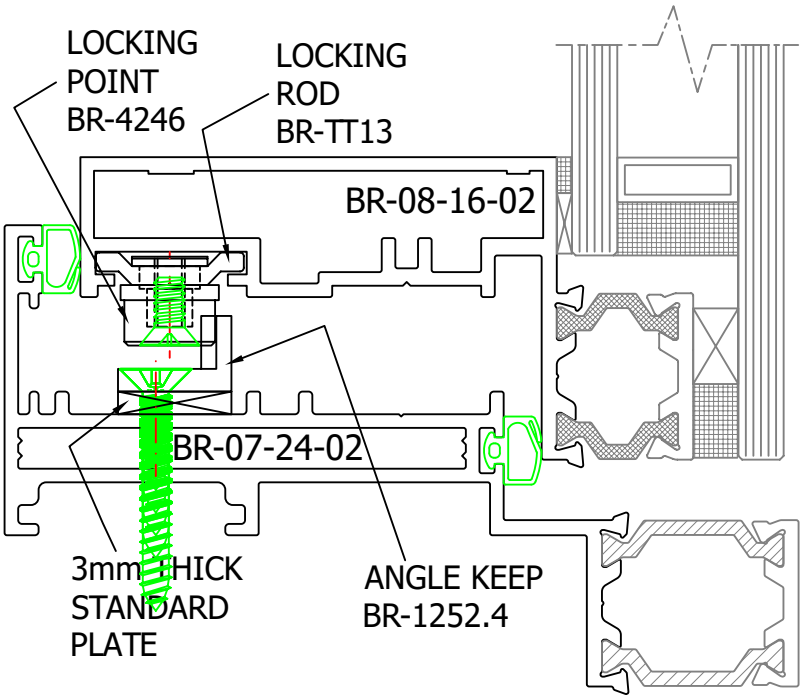


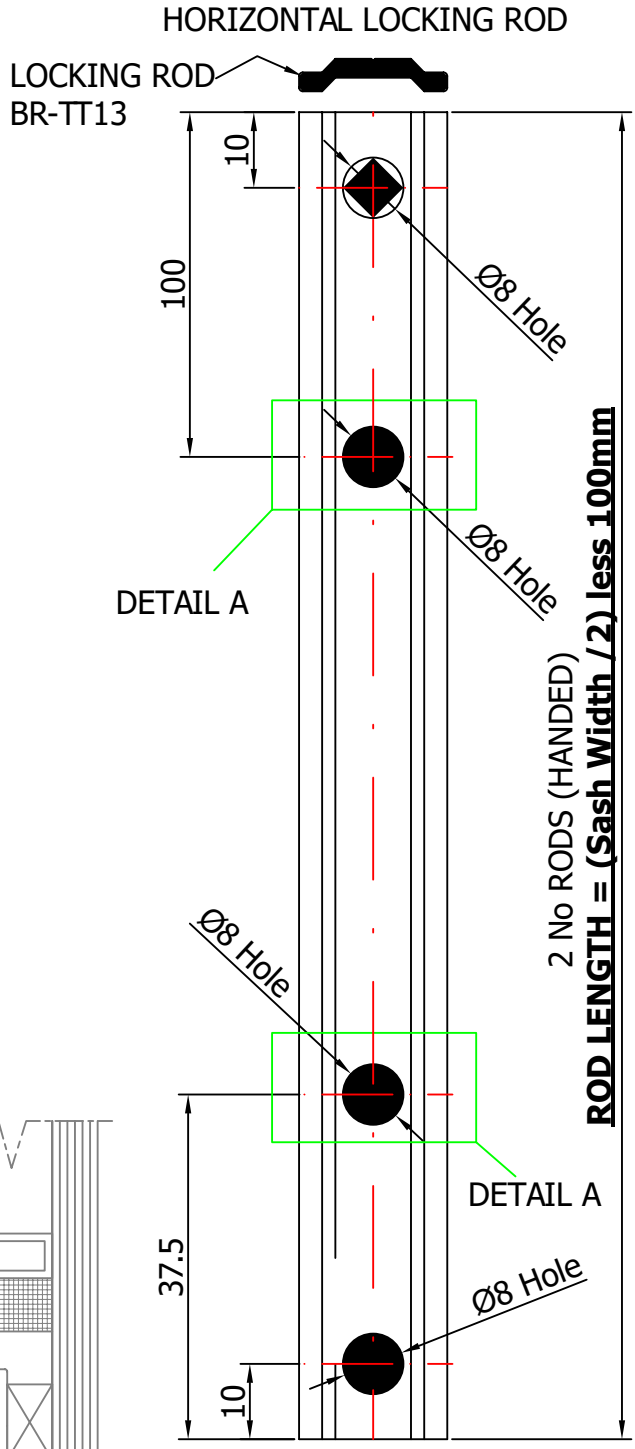


THIS DETAIL APPLIES TO BOTH **BR-07-24-02** AND **BR-07-10-06.** FOR VENT FIXING INTO VARIOUS CURTAIN WALL OPTIONS SEE SECTION 40

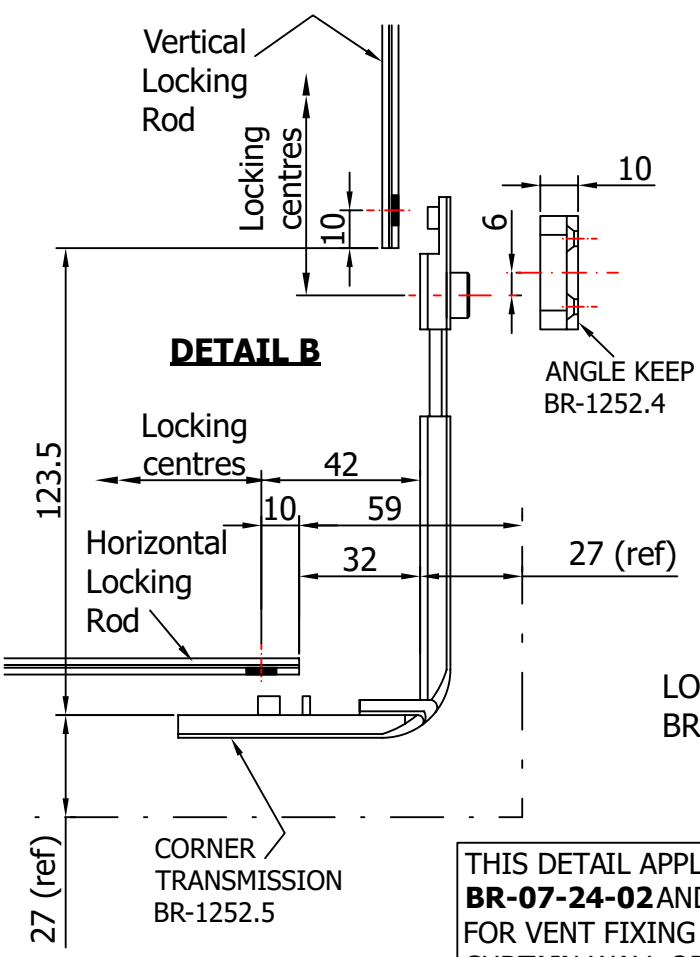


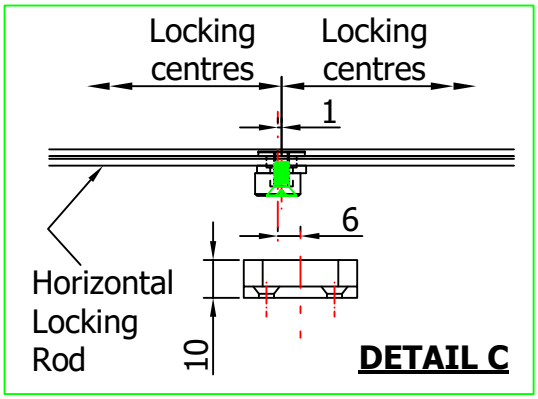


THIS DETAIL APPLIES TO BOTH **BR-07-24-02** AND **BR-07-10-06.** FOR VENT FIXING INTO VARIOUS CURTAIN WALL OPTIONS SEE SECTION 40

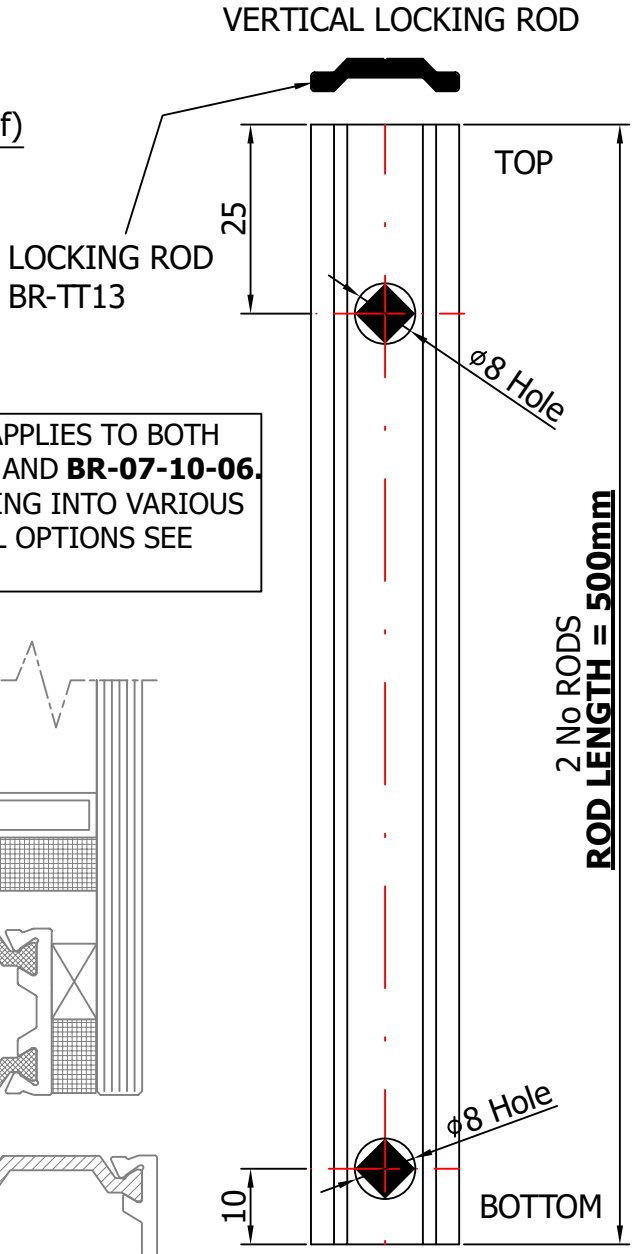


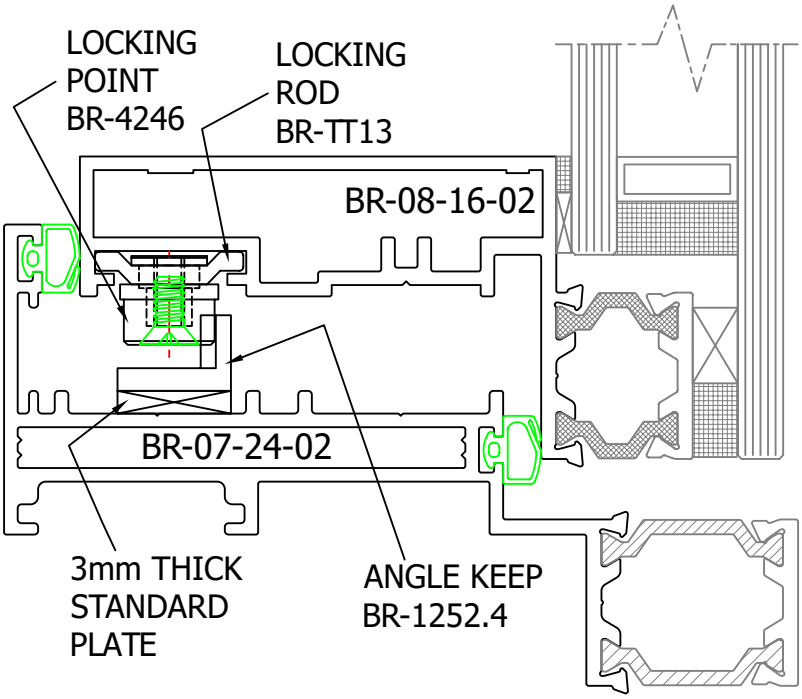

## Hinge Fitting Application Drawing

A) The hinges MUST be fitted between two flat and parallel faces. The distance between the two faces must be 17mm (+ or -1mm)

B) The hinge must be positioned as shown for optimum performance.

C) The hinge should be fitted with the end cap located into the internal corner of the outer frame. All fixing holes/slots MUST be used. This will ensure optimum performance and weather sealing.

## Fixings

Use stainless steel No10 x 16mm long Pan Head self tapping screws to fix vent arm & track .

Maximum head sizes for fixing screws 3.5mm deep & 10mm diameter

Maximum shank diameter 5mm

Screws in both arm & track should be Austenitic stainless steel (A2 or A4).

## Maintenance of Friction Stays

The hinge in general and particularly thepivots, sliding shoe and track must be kept free from dirt, debris and any obstructions at all times. At the time of installation lubricate all pivot points with light machine oil and wipe away excess - one drop per pivot is sufficient. The manufacturer suggests one of the following lubricants or equivalent :- ER Howard 3 in 1 oil or Castrol Everyman.
Every year clean any dirt or debris from the hinge and clear any obstructions from the pivots sliding shoe and track. Apply lubrication as above. Check the tightness and security of all fixing screws and rivets. For hinges fitted in corrosive areas i. e. coastal locations refer to additional maintainance recommended by manufacturer.

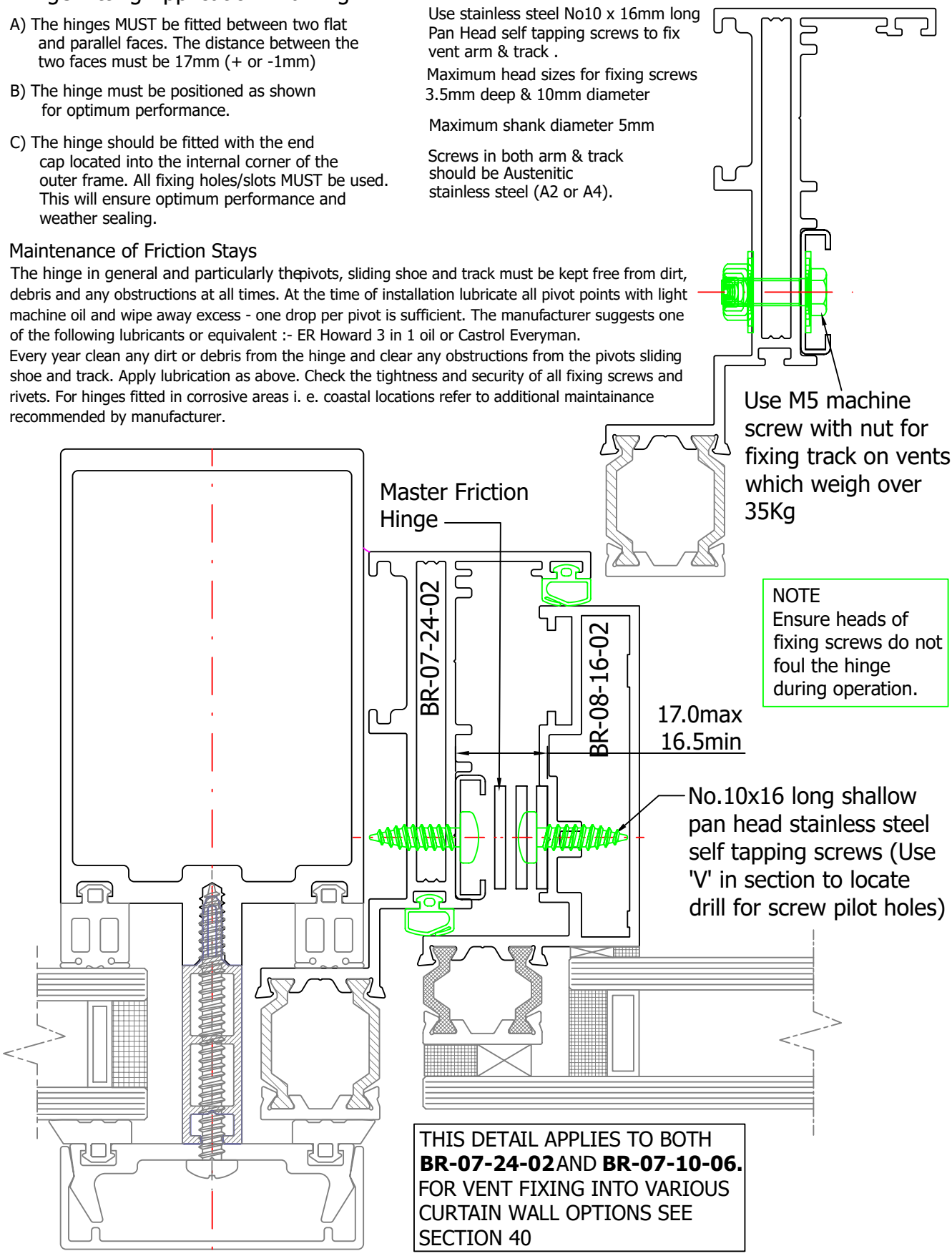


NOTE
Ensure heads of fixing screws do not foul the hinge during operation.

THIS DETAIL APPLIES TO BOTH **BR-07-24-02** AND **BR-07-10-06.** FOR VENT FIXING INTO VARIOUS CURTAIN WALL OPTIONS SEE SECTION 40

## Section23 - Frameless, Shutter Fittings & Ironmongery

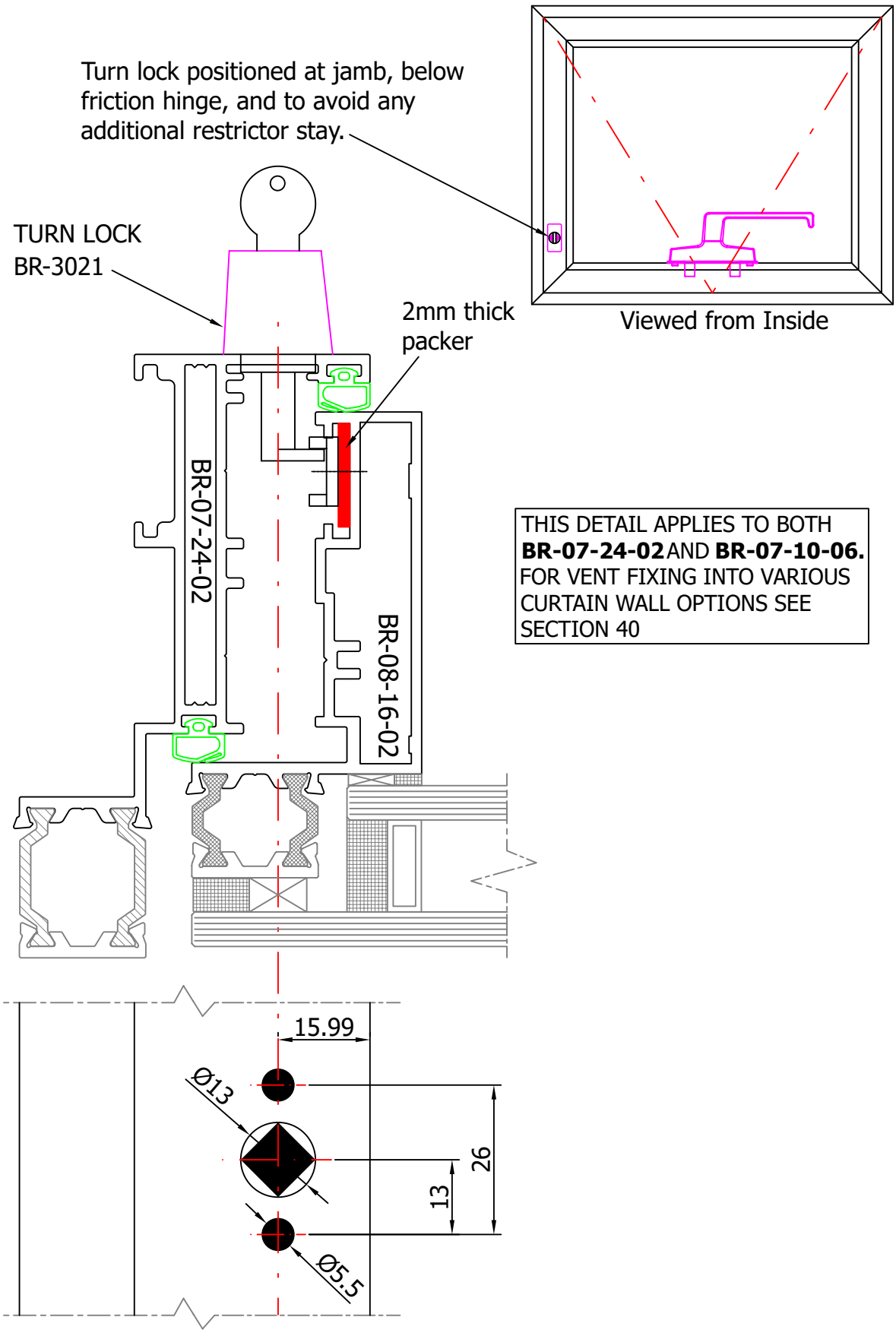


THIS DETAIL APPLIES TO BOTH **BR-07-24-02** AND **BR-07-10-06.** FOR VENT FIXING INTO VARIOUS CURTAIN WALL OPTIONS SEE SECTION 40

## Section23 - Frameless, Shutter Fittings & Ironmongery

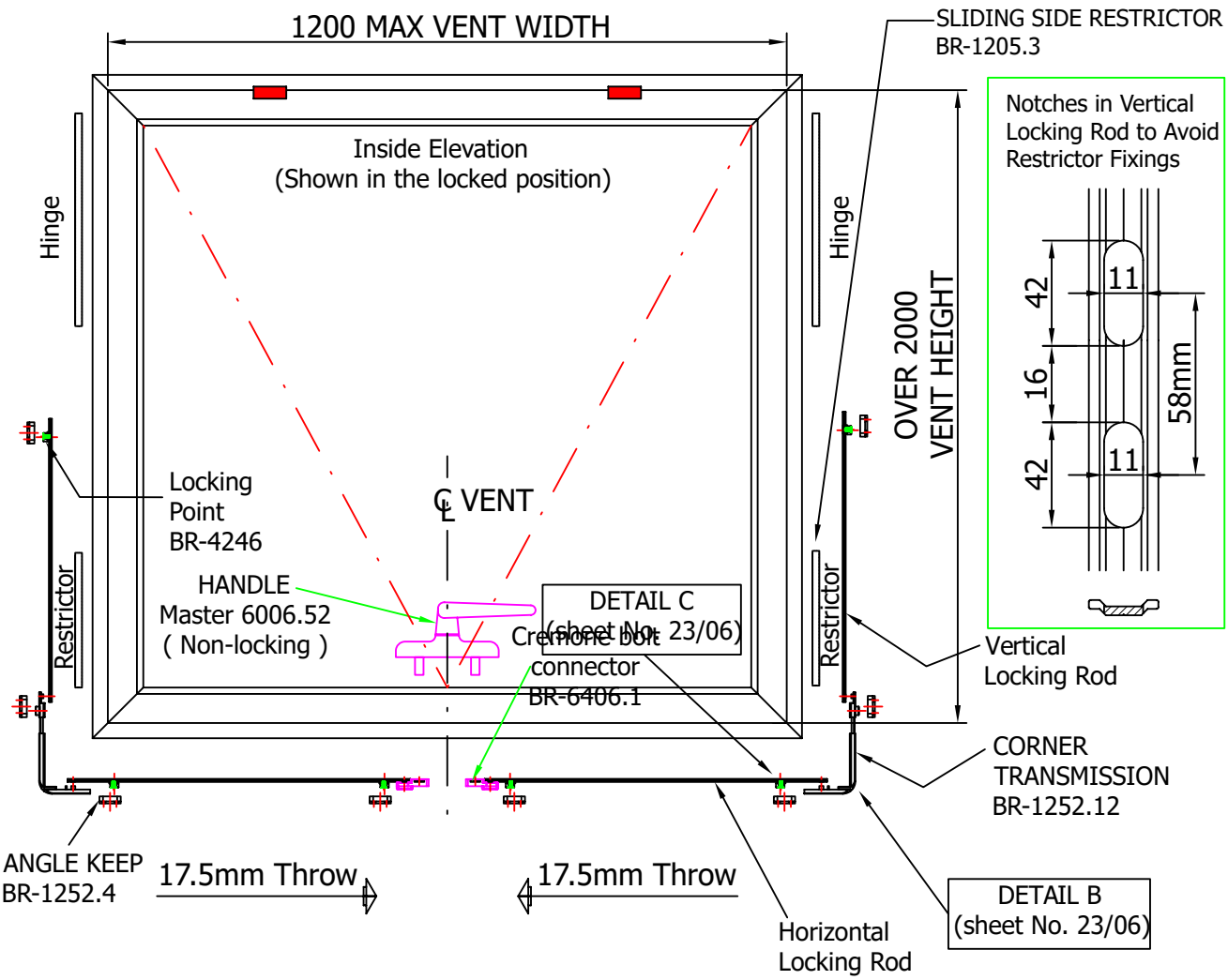


THIS PAGE APPLIES TO VENTS OVER 2000mm HIGH ONLY

## Section30 - Key Elevations

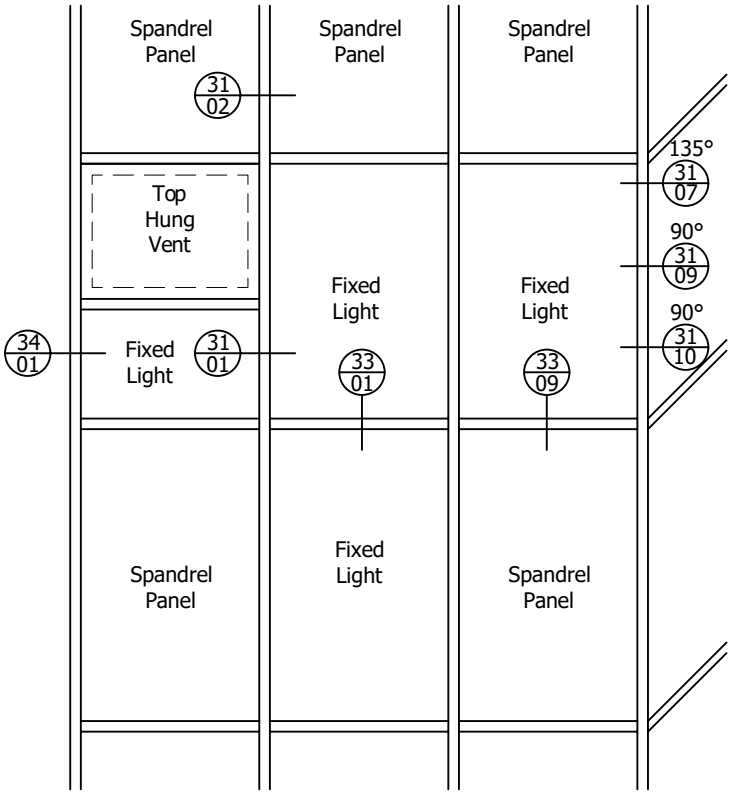


Typical Elevation
Scale 1:40

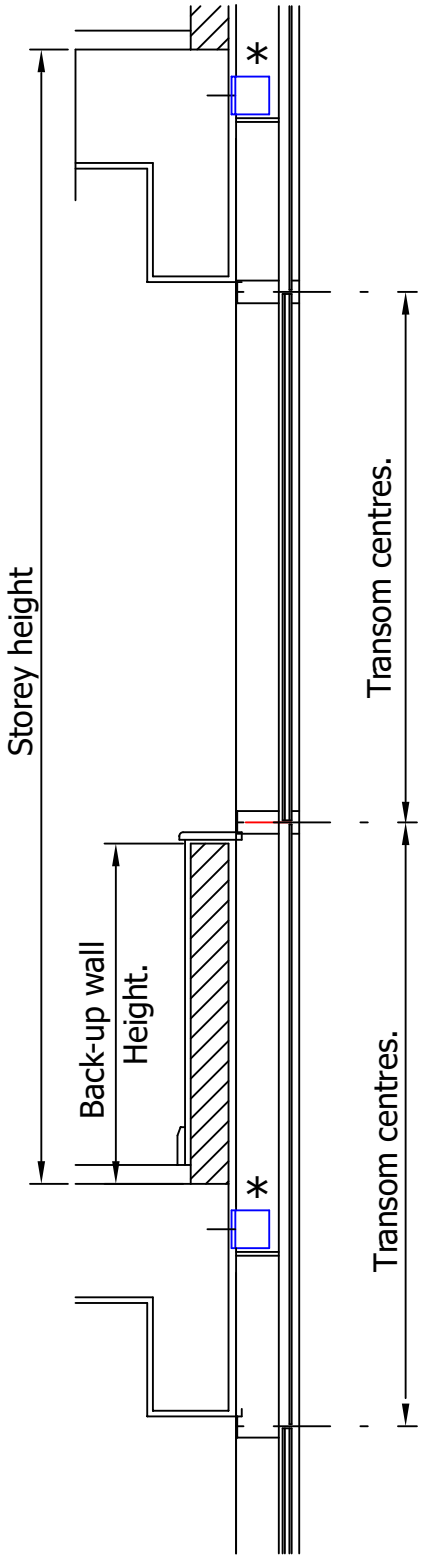


Typical Vertical Section
Scale 1:20

4 Sided Fully Capped Curtain Walling System

For Vent Details See Section 40 and 41

*: For typical Firestop details at floor slab see manual section 38

## Section30 - Key Elevations

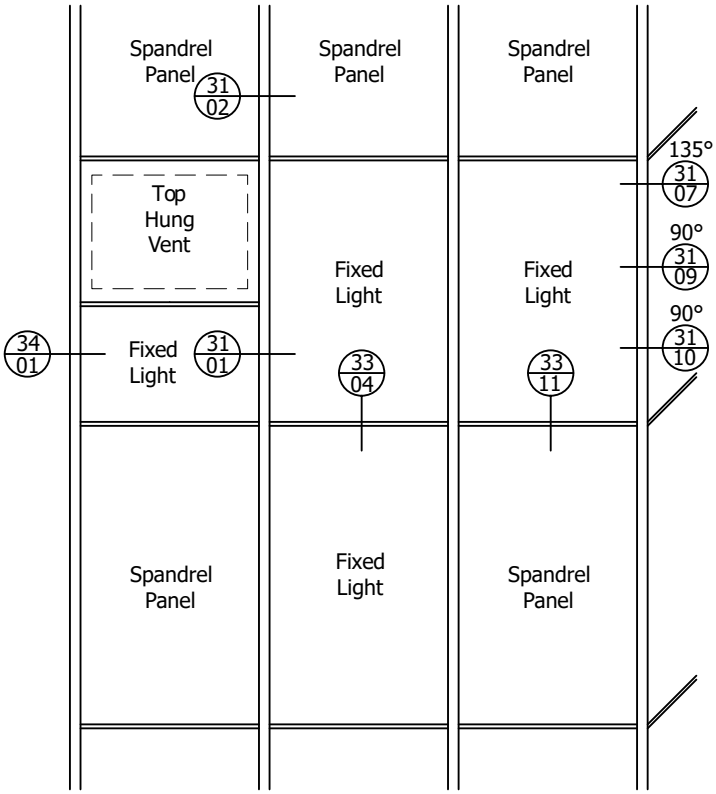


Typical Elevation
Scale 1:40

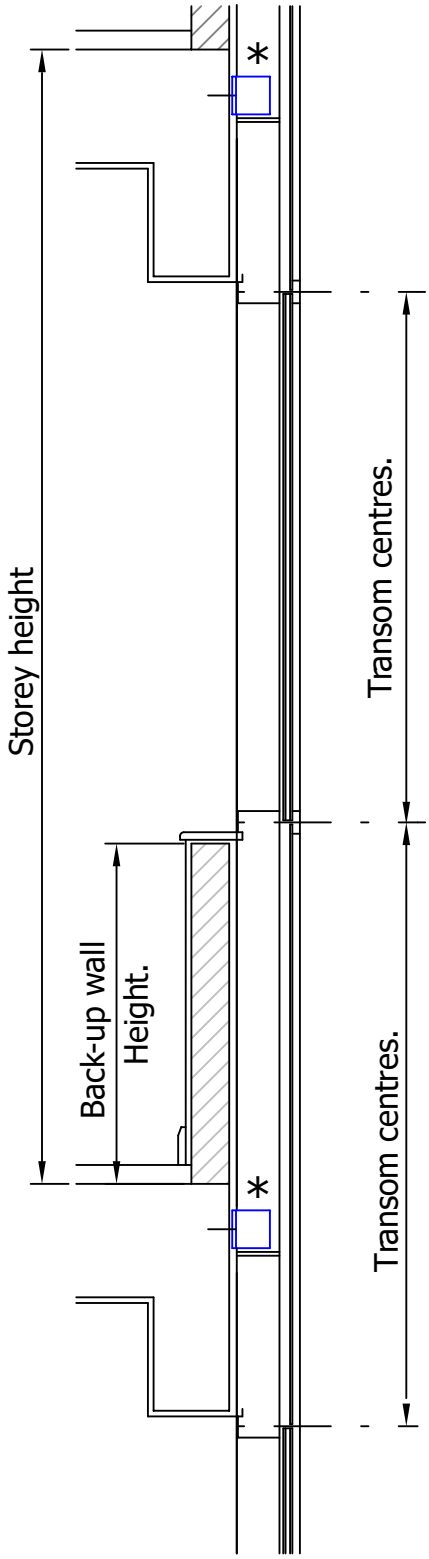


Typical Vertical Section
Scale 1:20

2 Sided Horizontal Structural Glazed Curtain Walling System

For Vent Details See Section 40 and 41

*: For typical Firestop details at floor slab see manual section 38

## Section30 - Key Elevations

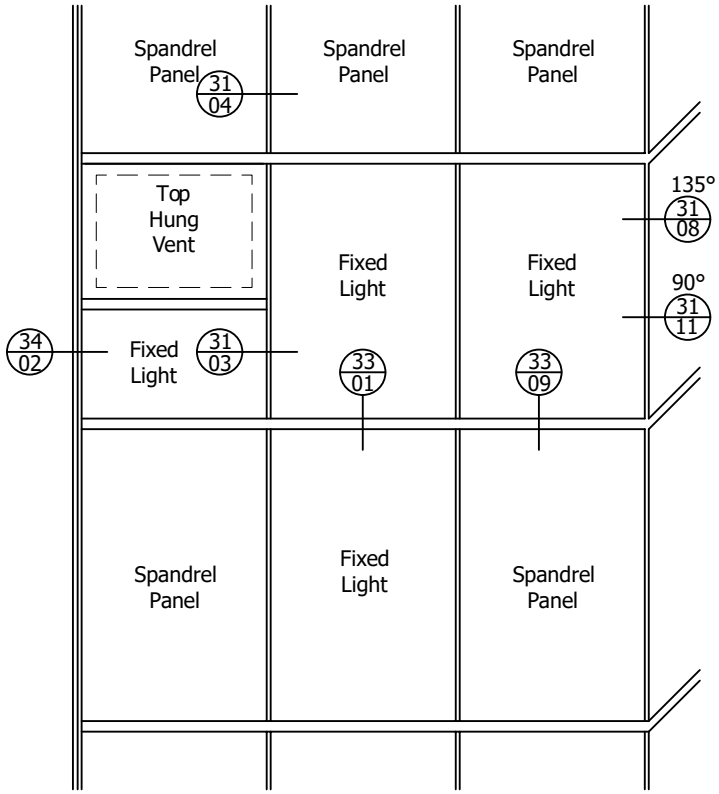


Typical Elevation
Scale 1:40

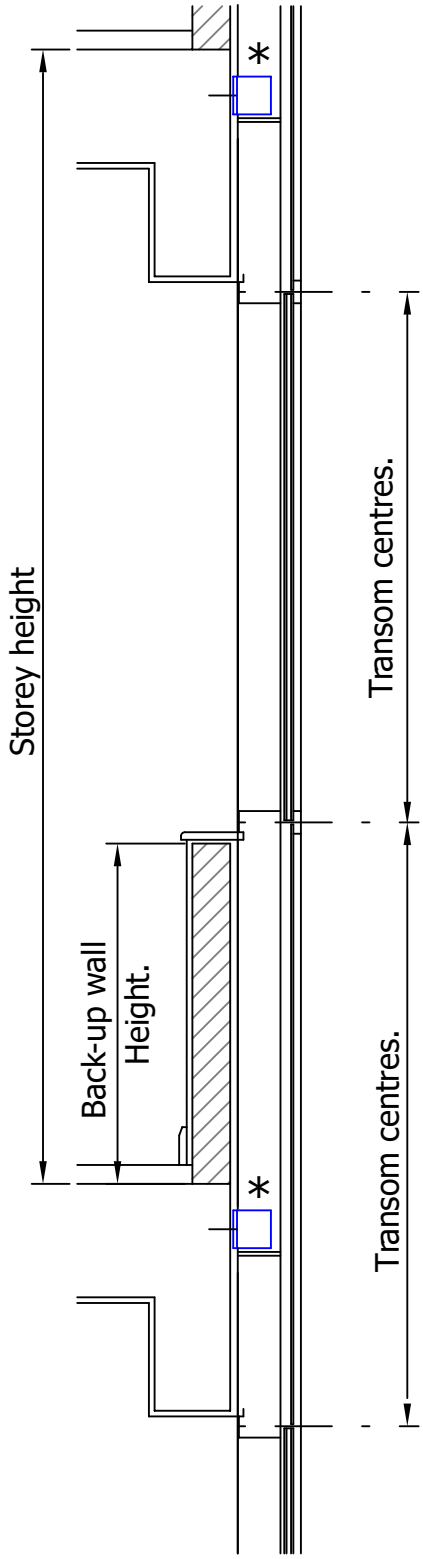


Typical Vertical Section
Scale 1:20

2 Sided Vertical Structural Glazed Curtain Walling System

See full size details shown on Assembly drawings of Mullions & Transoms

For Vent Details See Section 40 and 41

*: For typical Firestop details at floor slab see manual section 38

## Section30 - Key Elevations

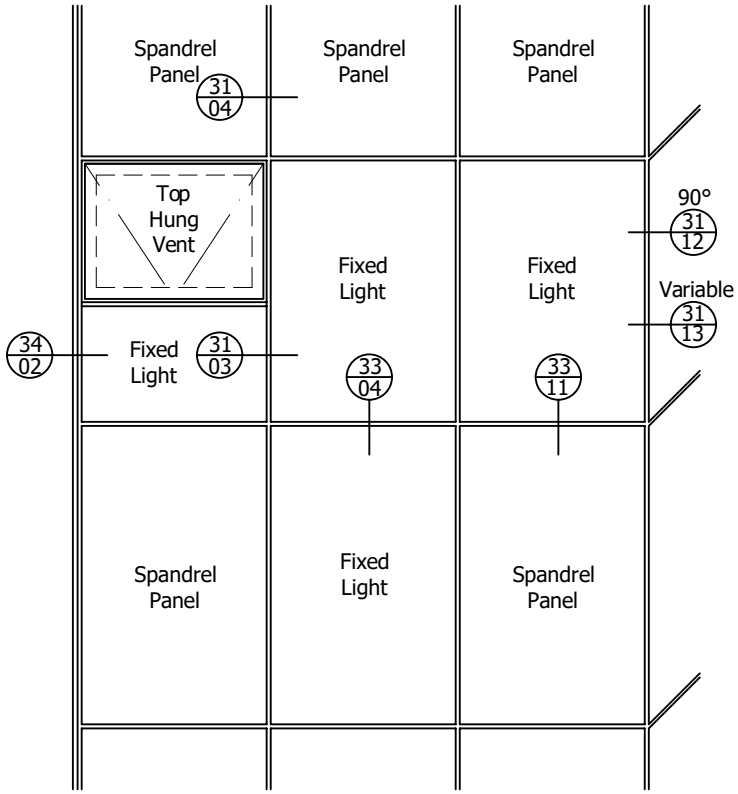


Typical Elevation
Scale 1:40

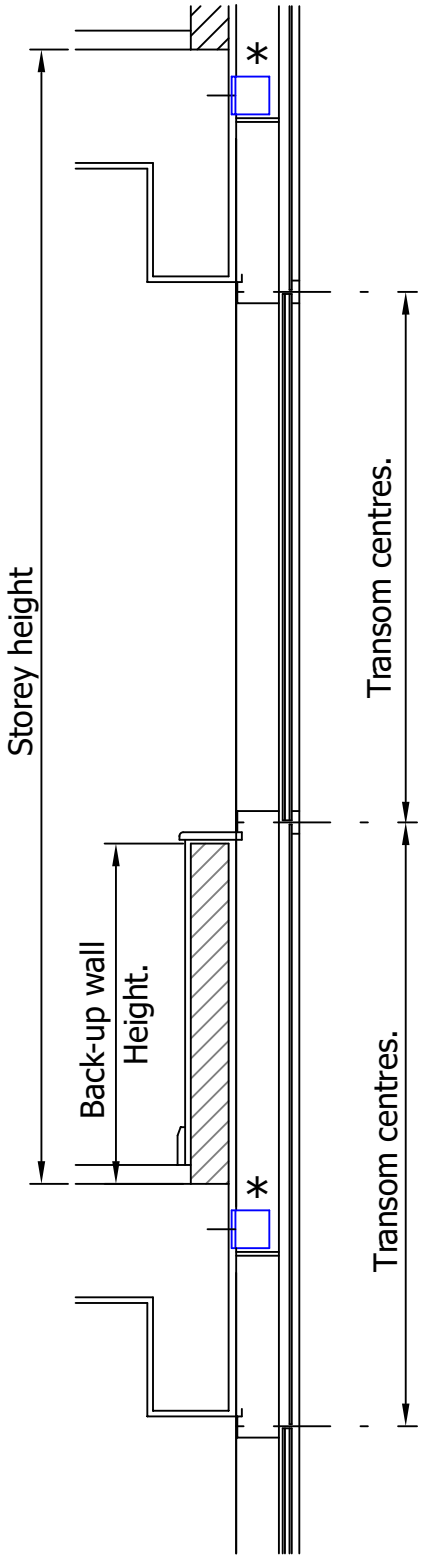


Typical Vertical Section
Scale 1:20

4 Sided Frameless Structural Glazed Curtain Walling System

See full size details shown on Assembly drawings of Mullions & Transoms

For Vent Details See Section 40 and 41

*: For typical Firestop details at floor slab see manual section 38

## Section30 - Key Elevations

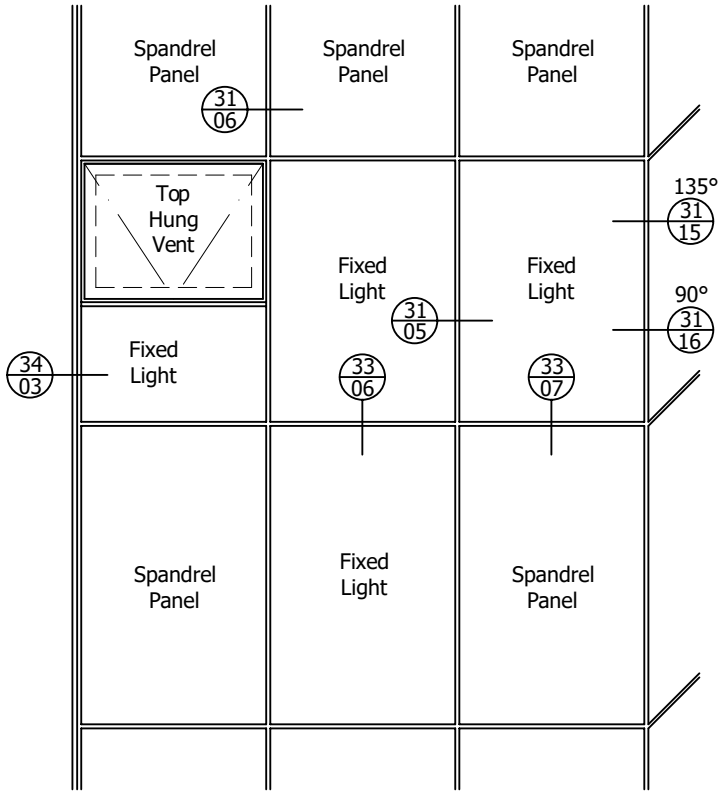


Typical Elevation
Scale 1:40

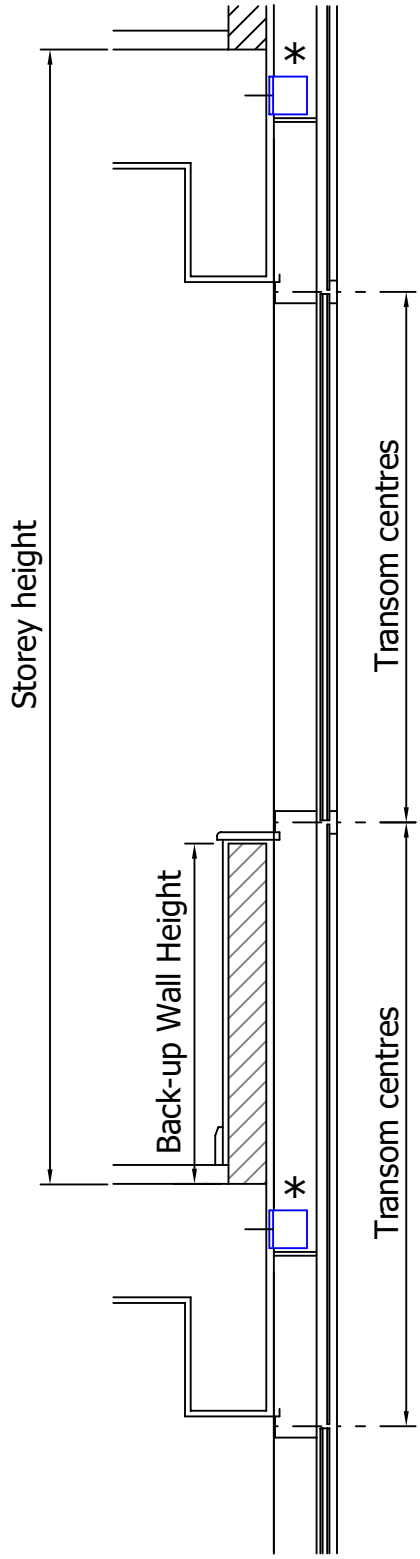


Typical Vertical Section
Scale 1:20

4 Sided Frameless Structural Glazed Curtain Walling System with Carrier Frame

See full size details shown on Assembly drawings of Mullions & Transoms

For Vent Details See Section 40/05 and 41

*: For typical Firestop details at floor slab see manual section 38

## Section31 - Intermediate Mullion Details (Including Corners)

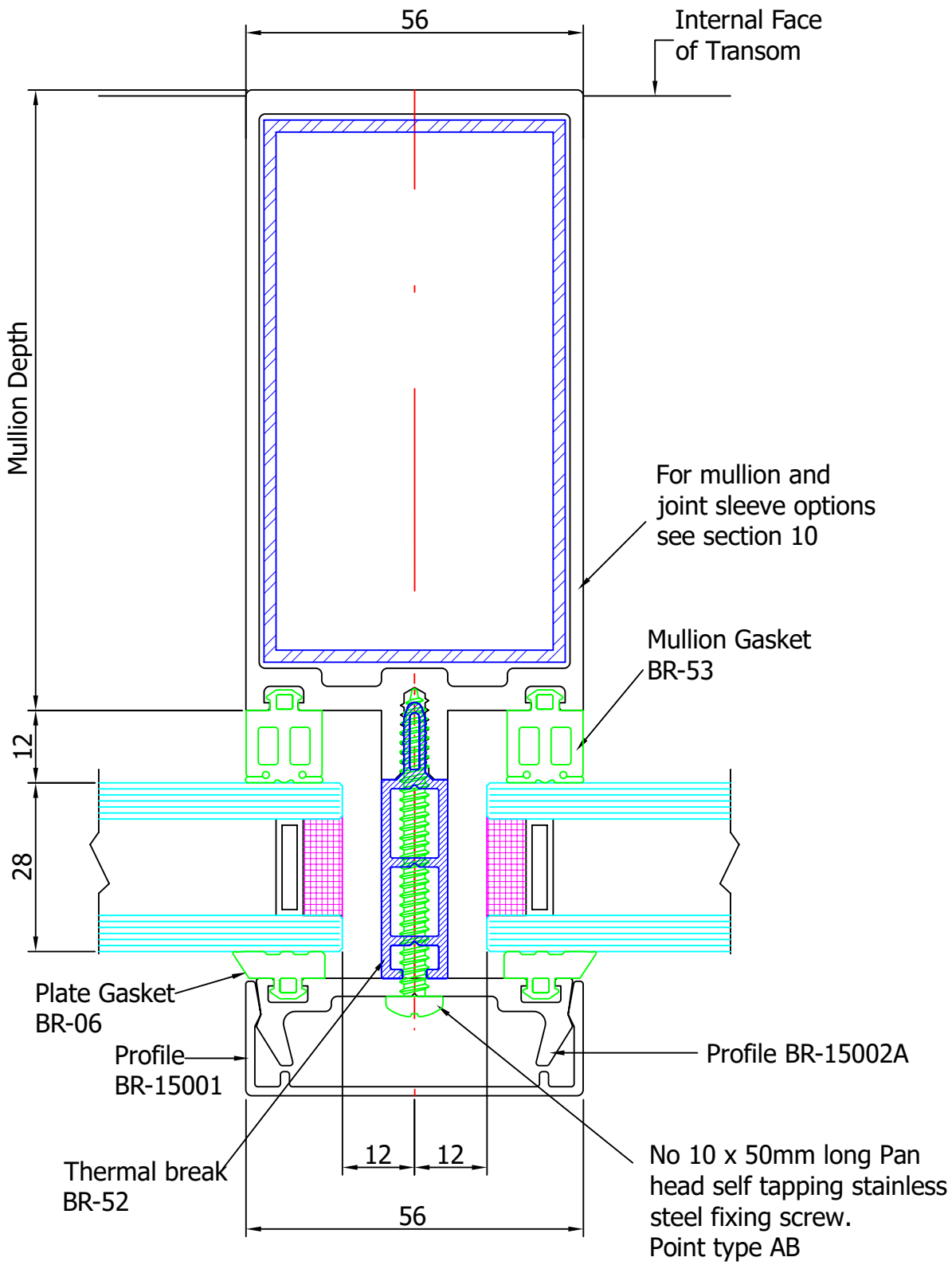

## Section31 - Intermediate Mullion Details (Including Corners)

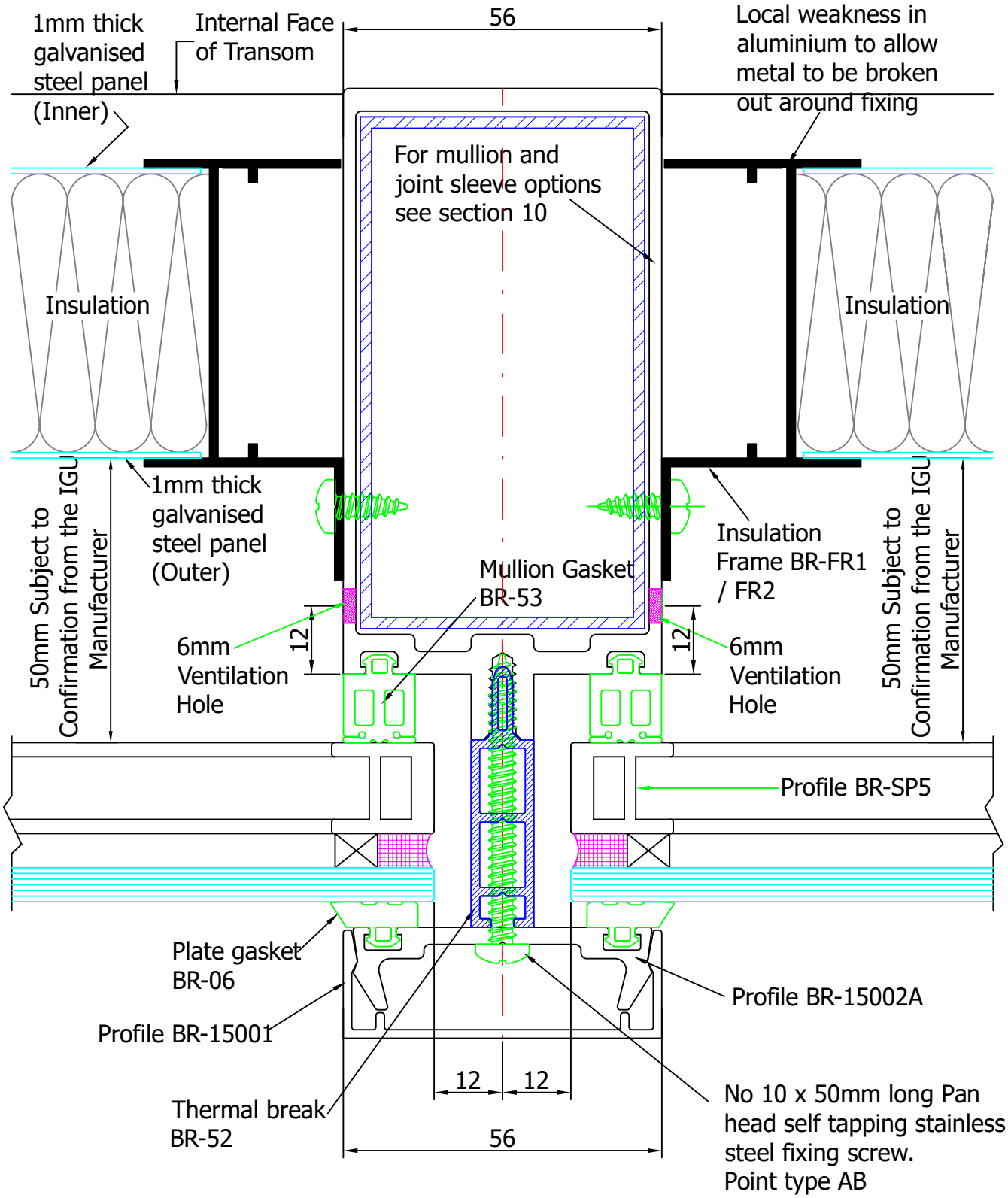

## Section31 - Intermediate Mullion Details (Including Corners)

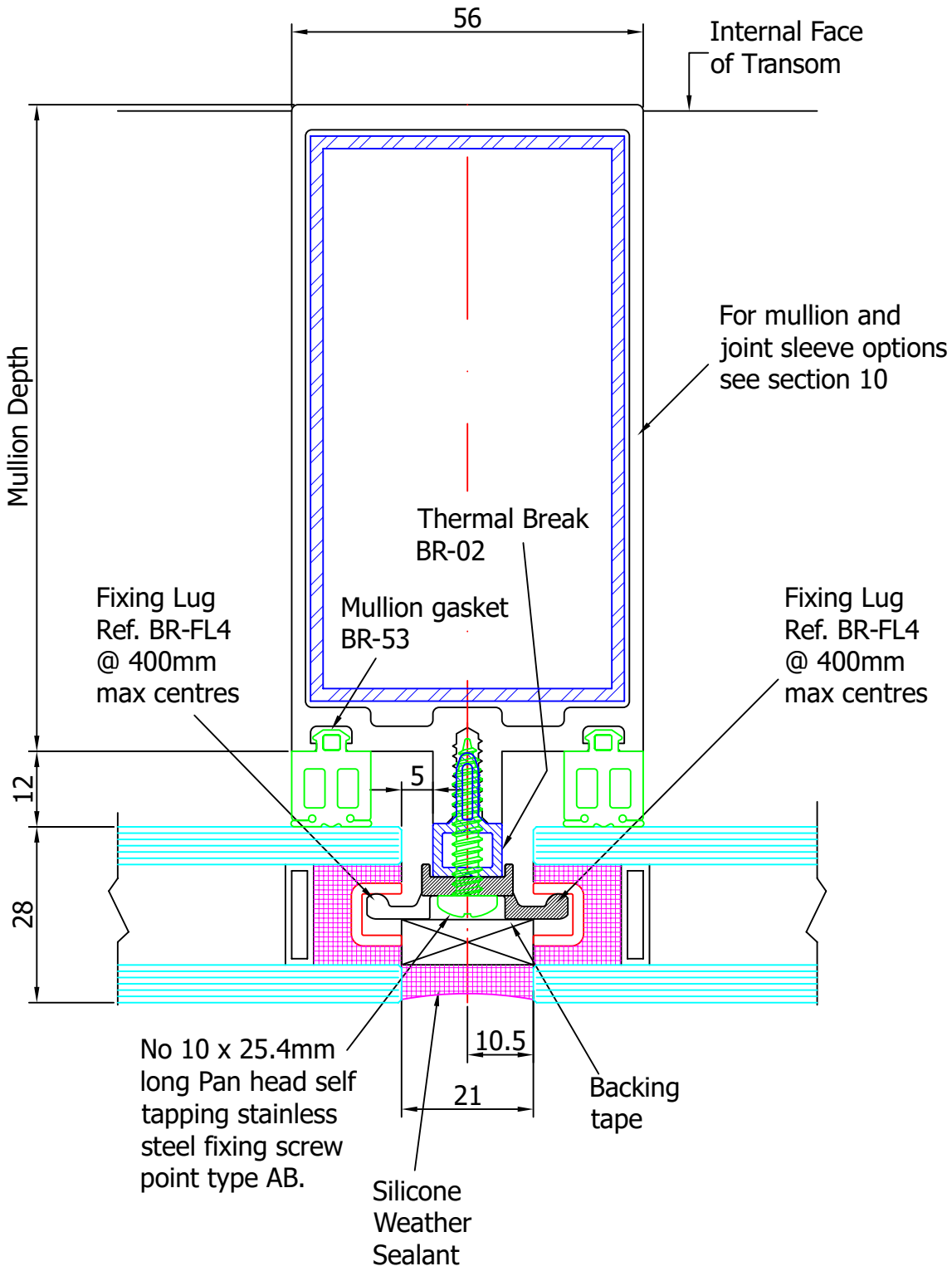

## Section31 - Intermediate Mullion Details (Including Corners)

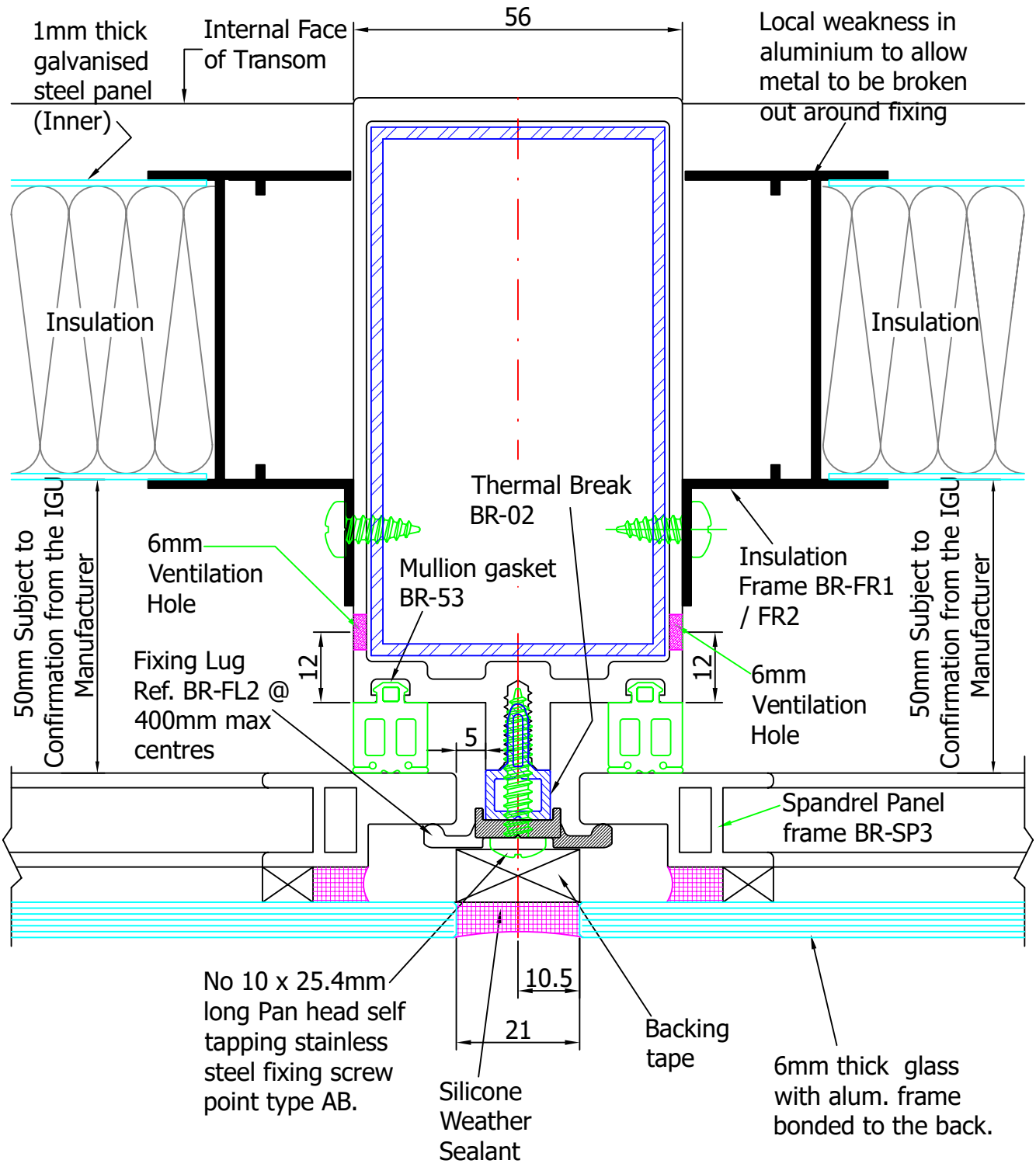

## Section31 - Intermediate Mullion Details (Including Corners)

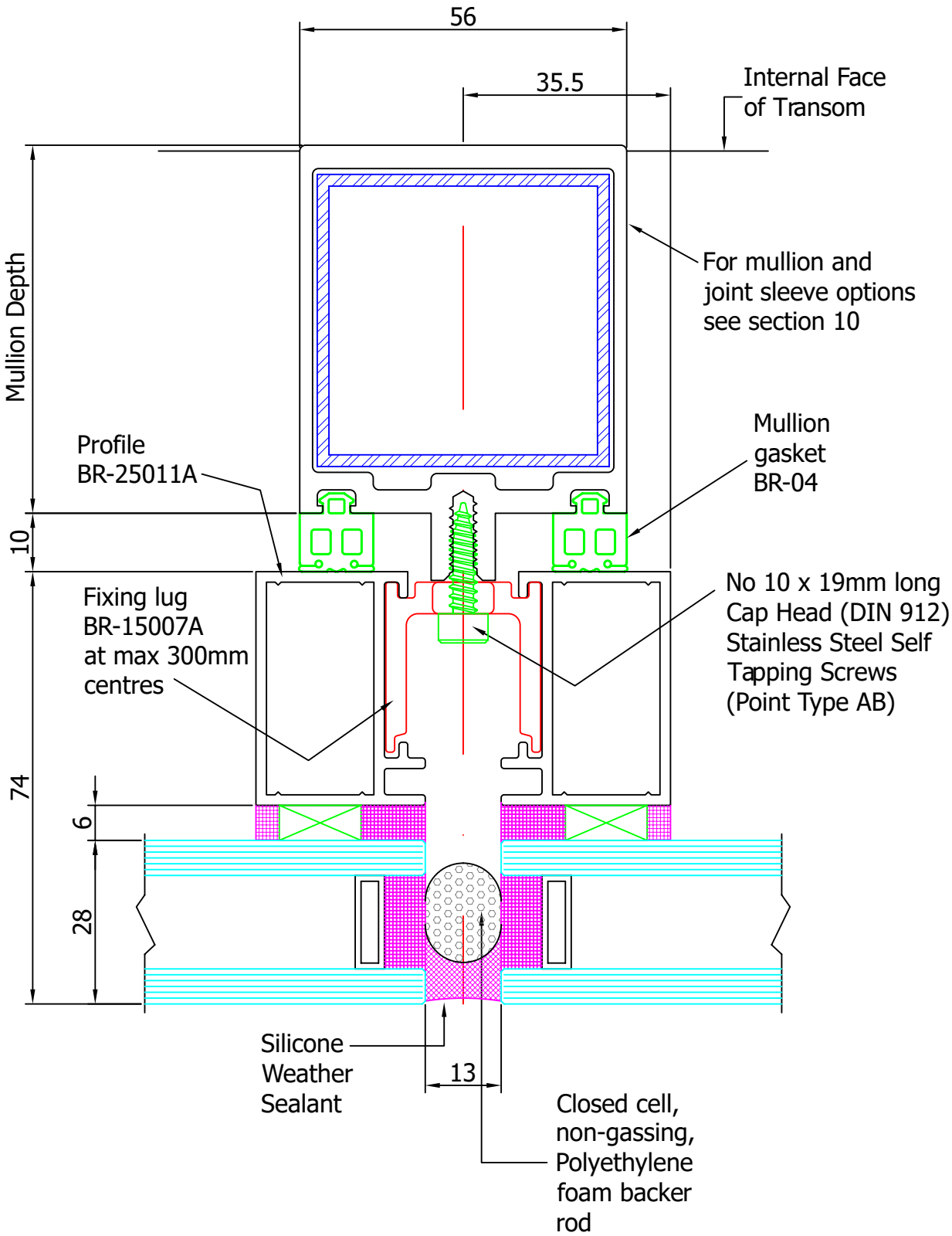

## Section31 - Intermediate Mullion Details (Including Corners)

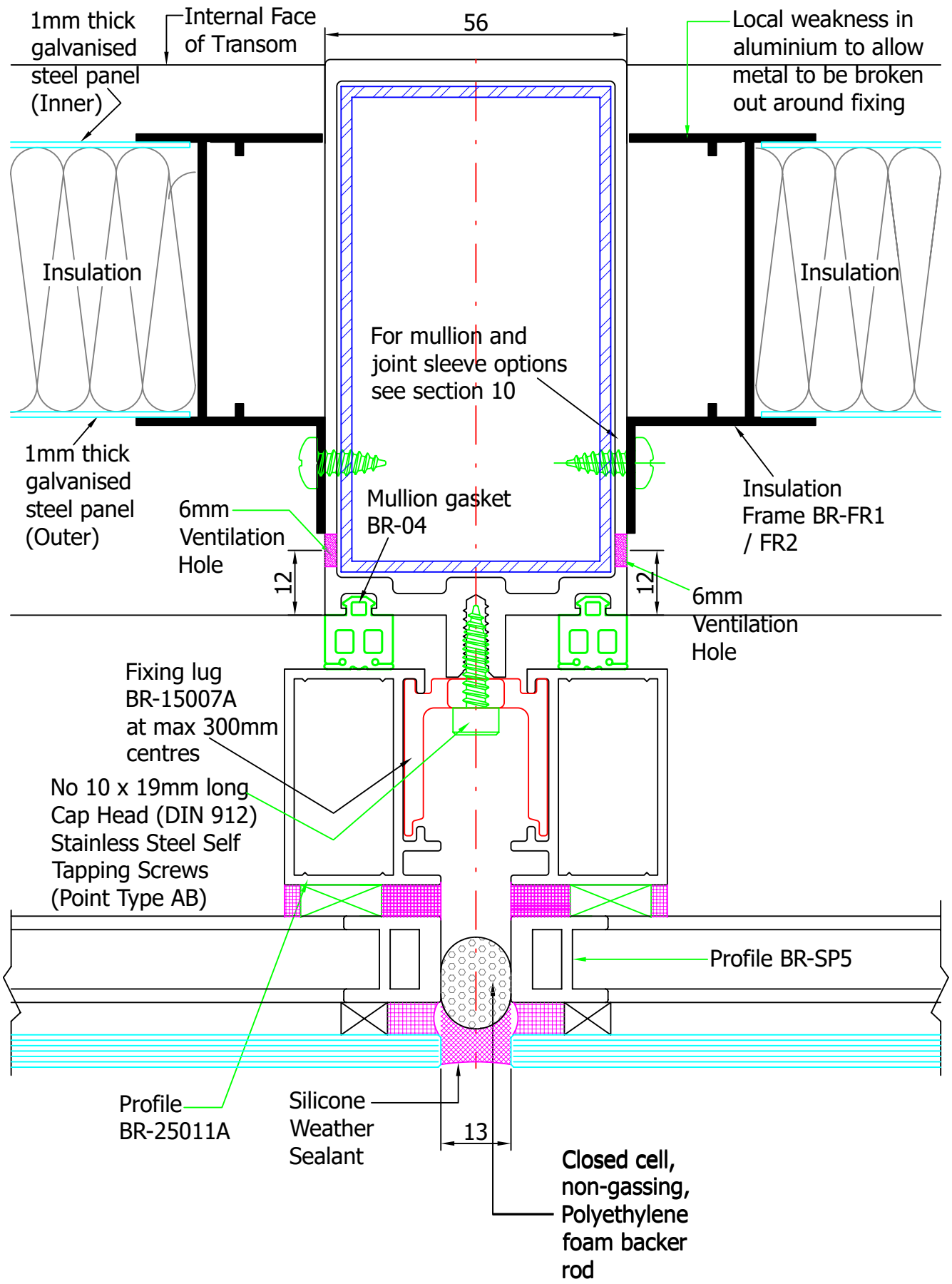

## Section31 - Intermediate Mullion Details (Including Corners)

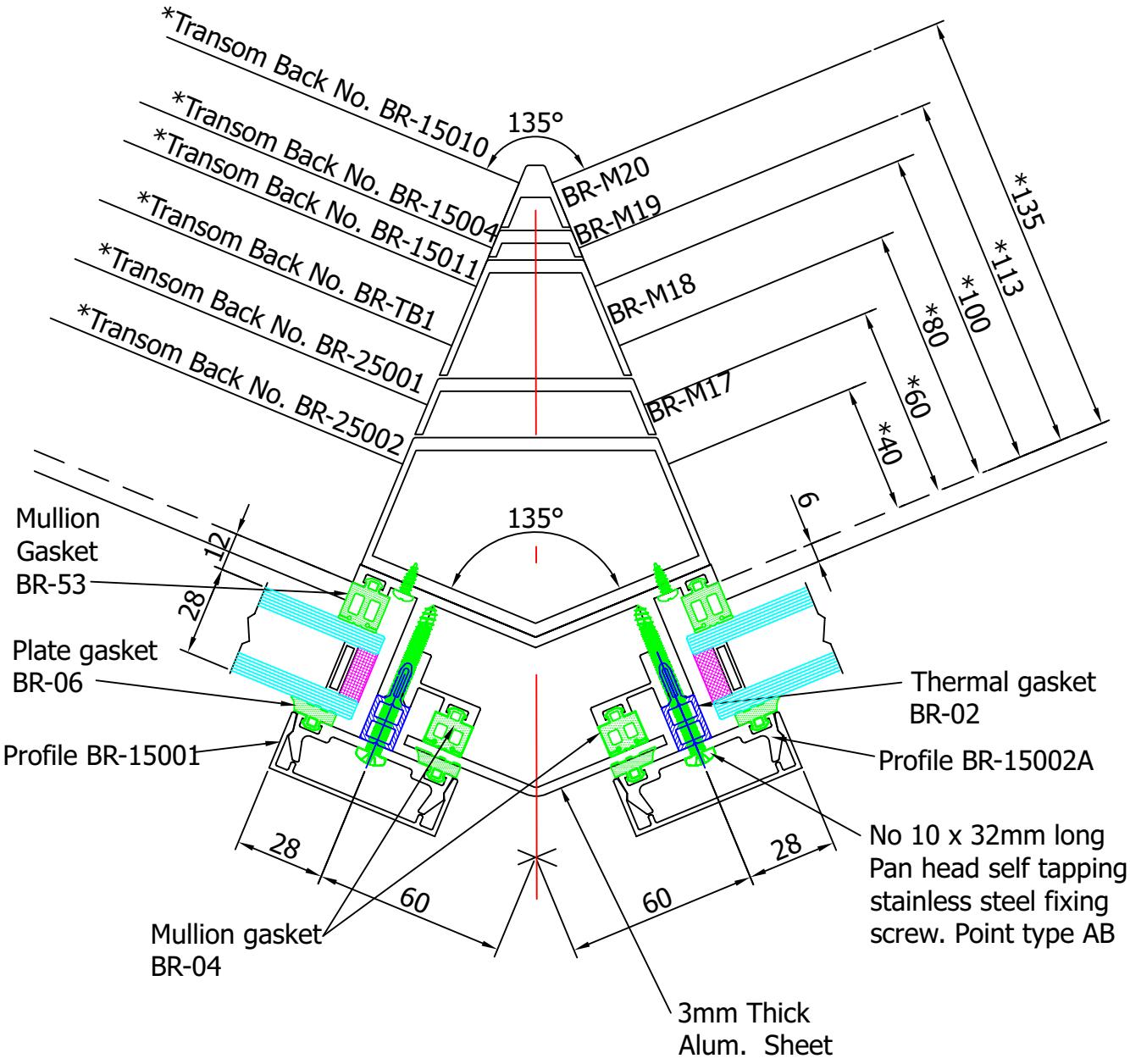

## Section31 - Intermediate Mullion Details (Including Corners)

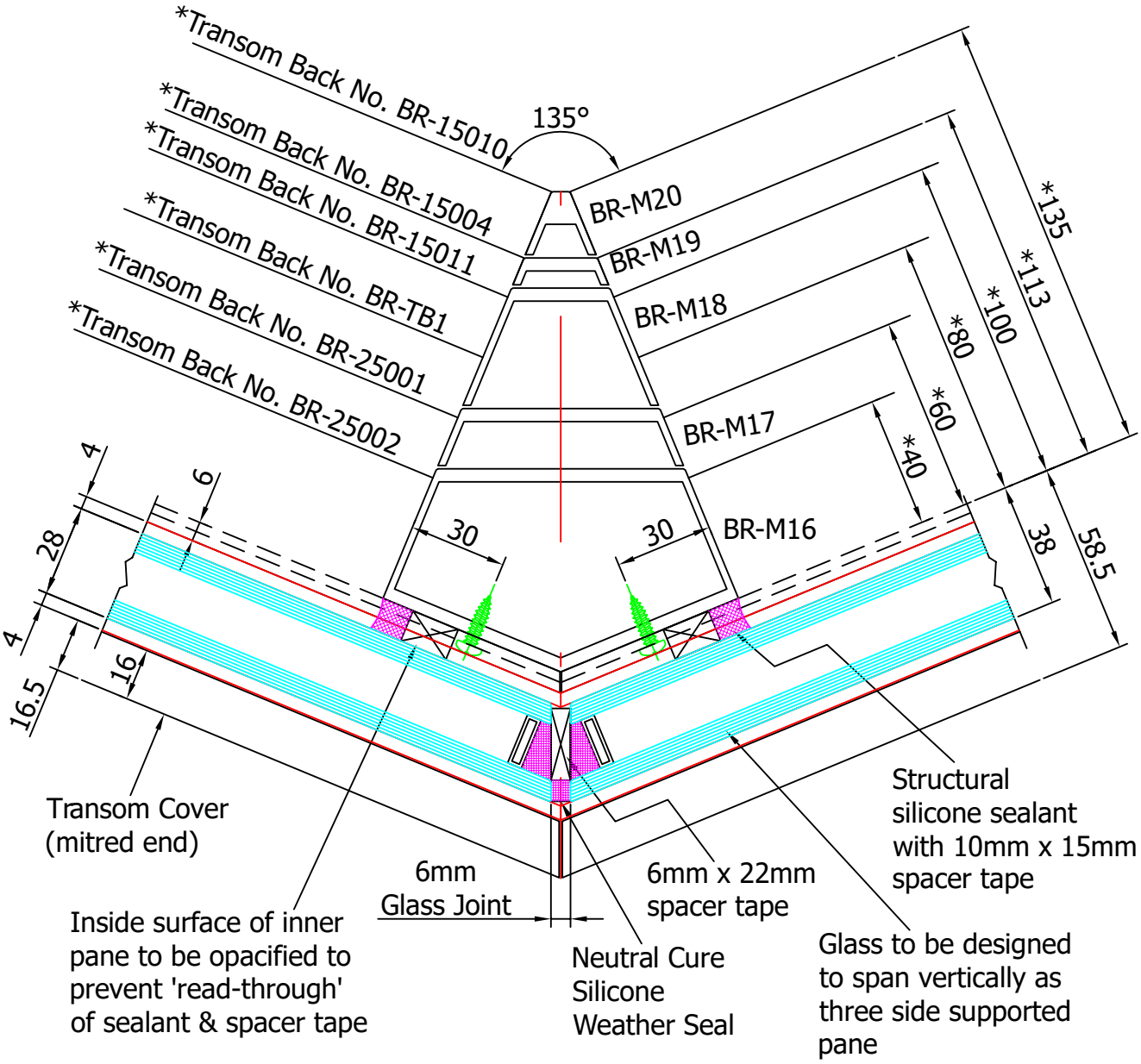


NOTE :- Spacer Tapes are to be compatible with Silicone sealants.

This detail is only suitable for use with vertical silicone joints and horizontal capped system (VFF)

## Section31 - Intermediate Mullion Details (Including Corners)

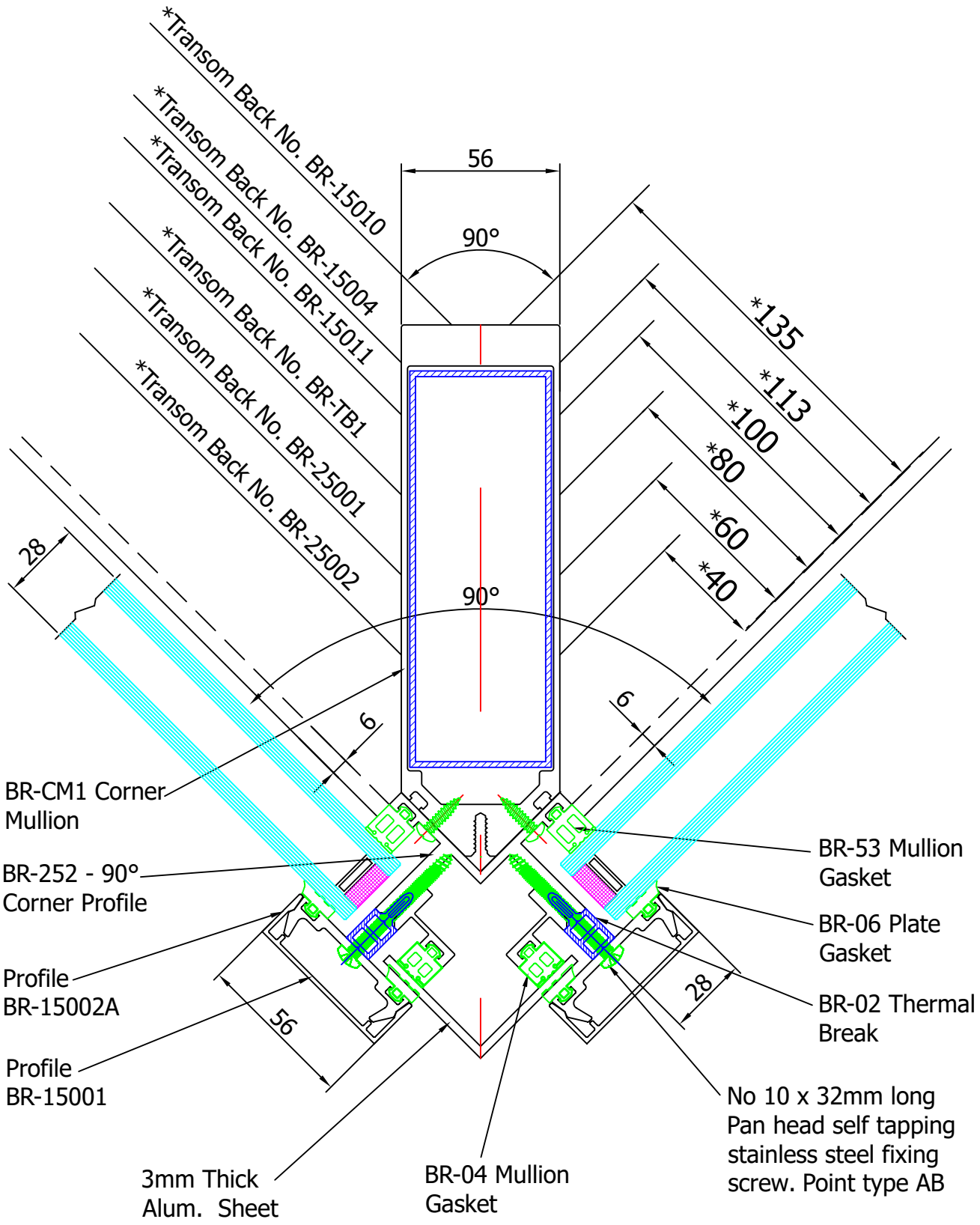

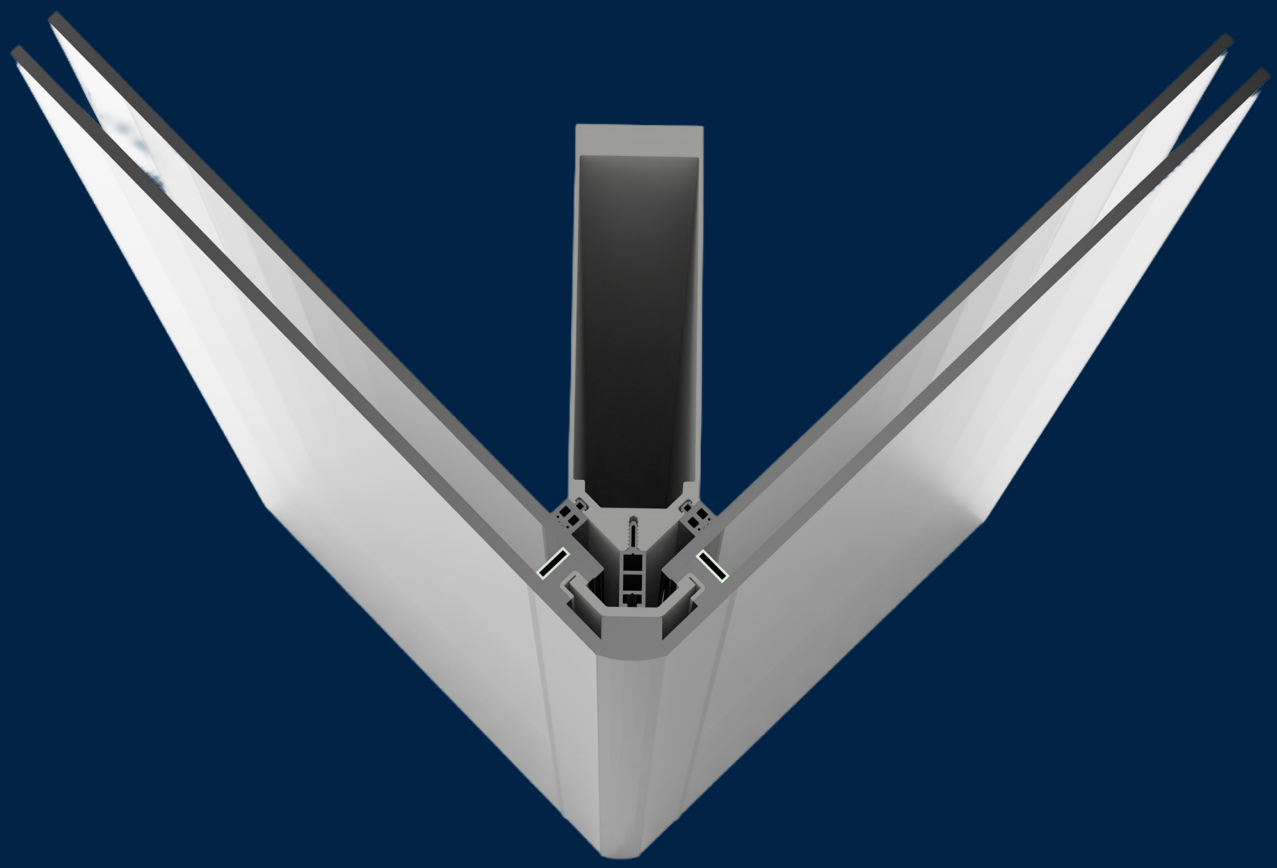

BRITAL

ALUMINIUM SYSTEMS DESIGN

## Section31 - Intermediate Mullion Details (Including Corners)

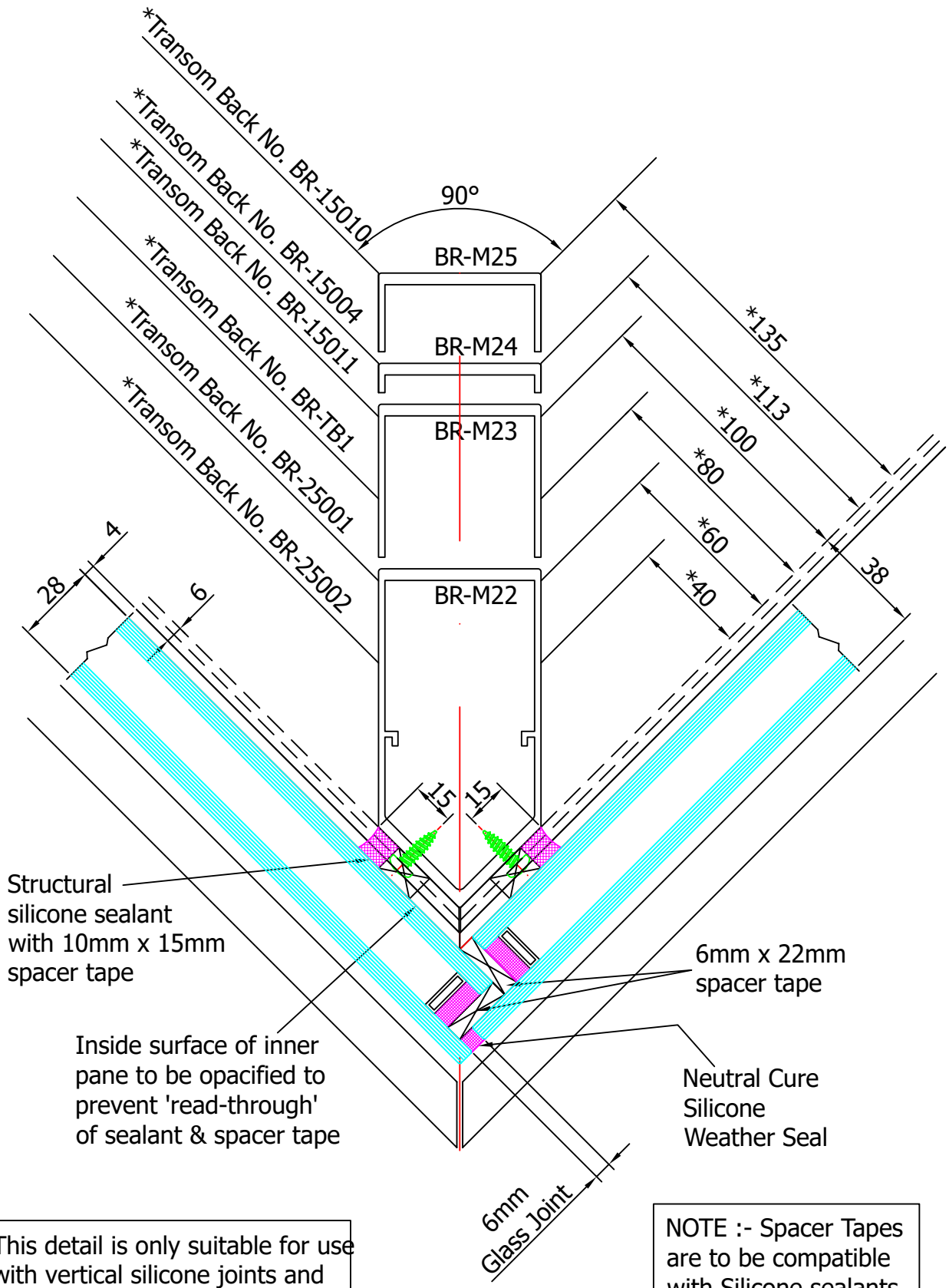


This detail is only suitable for use with vertical silicone joints and horizontal capped system (VFF)

NOTE :- Spacer Tapes are to be compatible with Silicone sealants.

## Section31 - Intermediate Mullion Details (Including Corners)

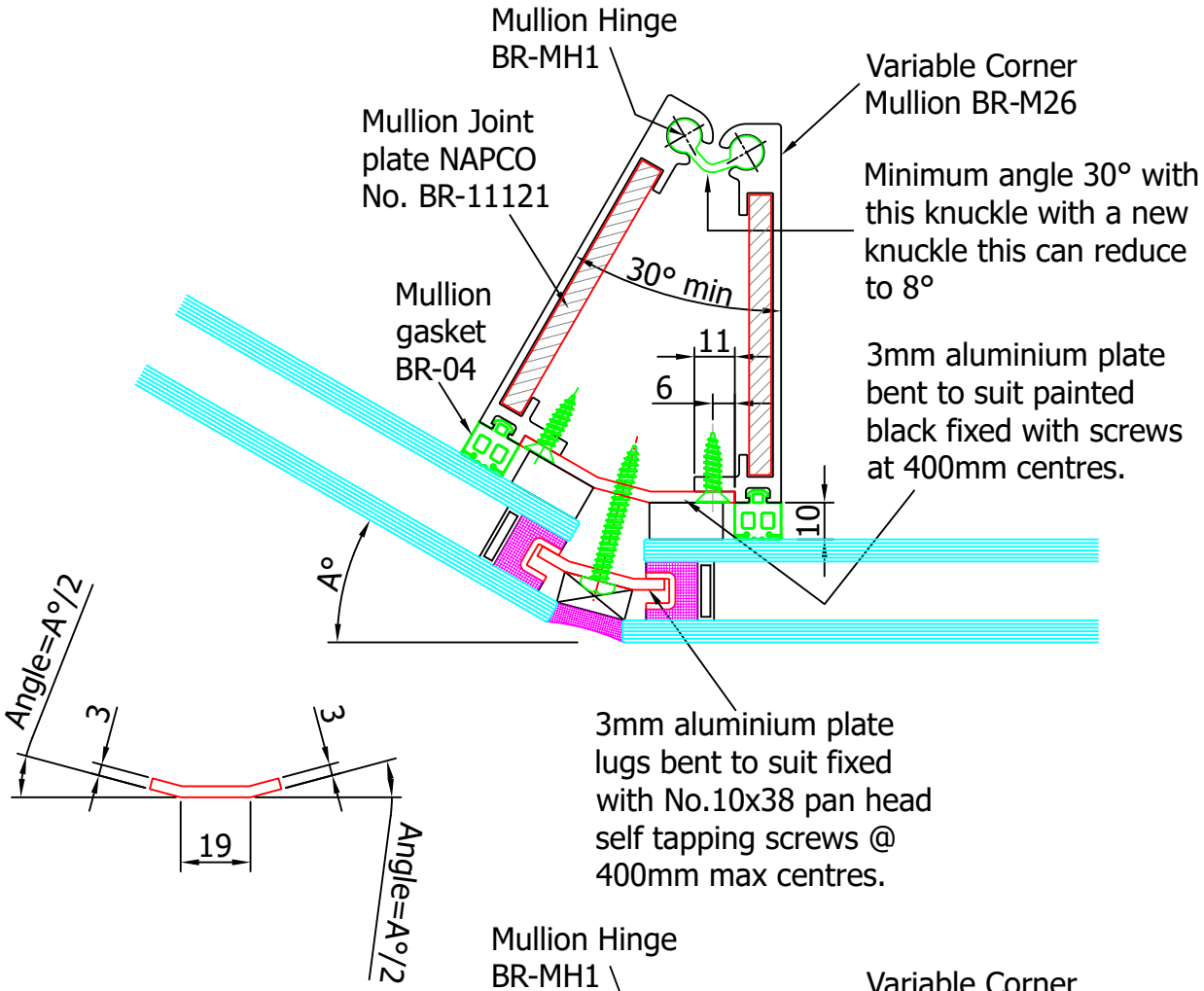


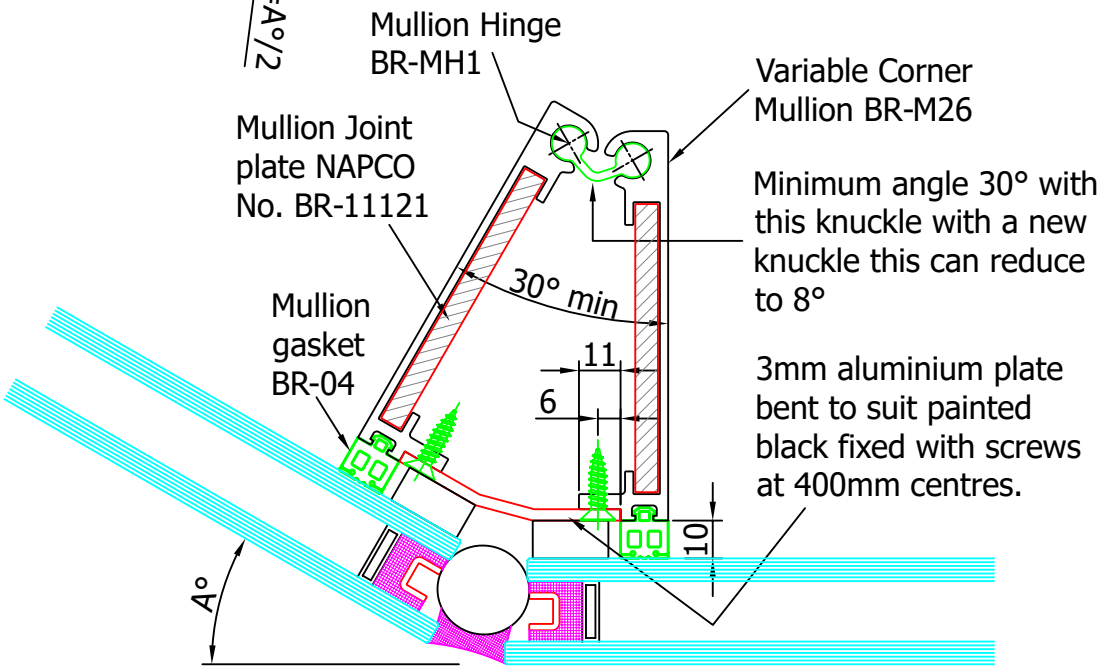

## Section31 - Intermediate Mullion Details (Including Corners)

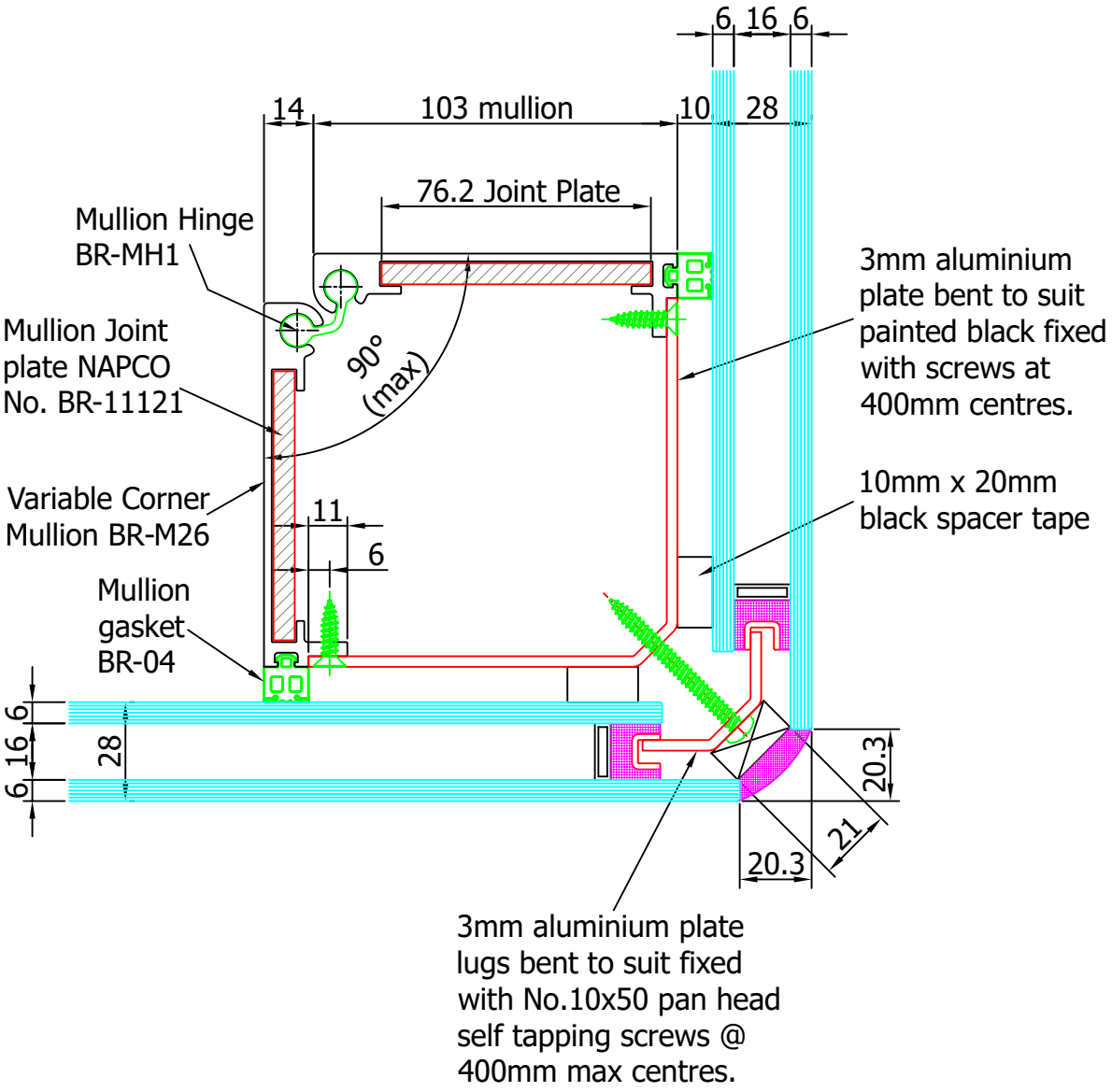

## Section31 - Intermediate Mullion Details (Including Corners)

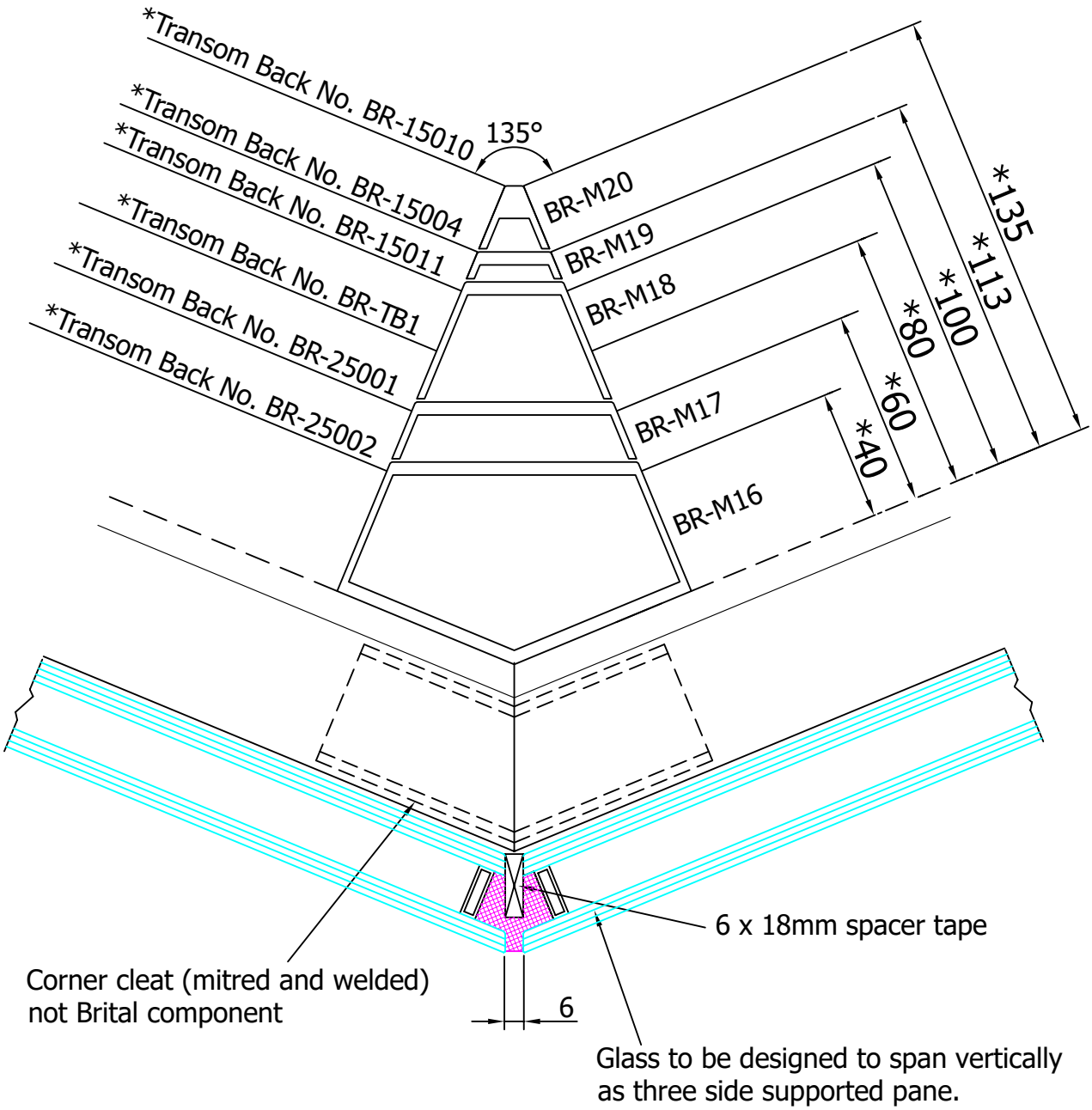

## Section31 - Intermediate Mullion Details (Including Corners)

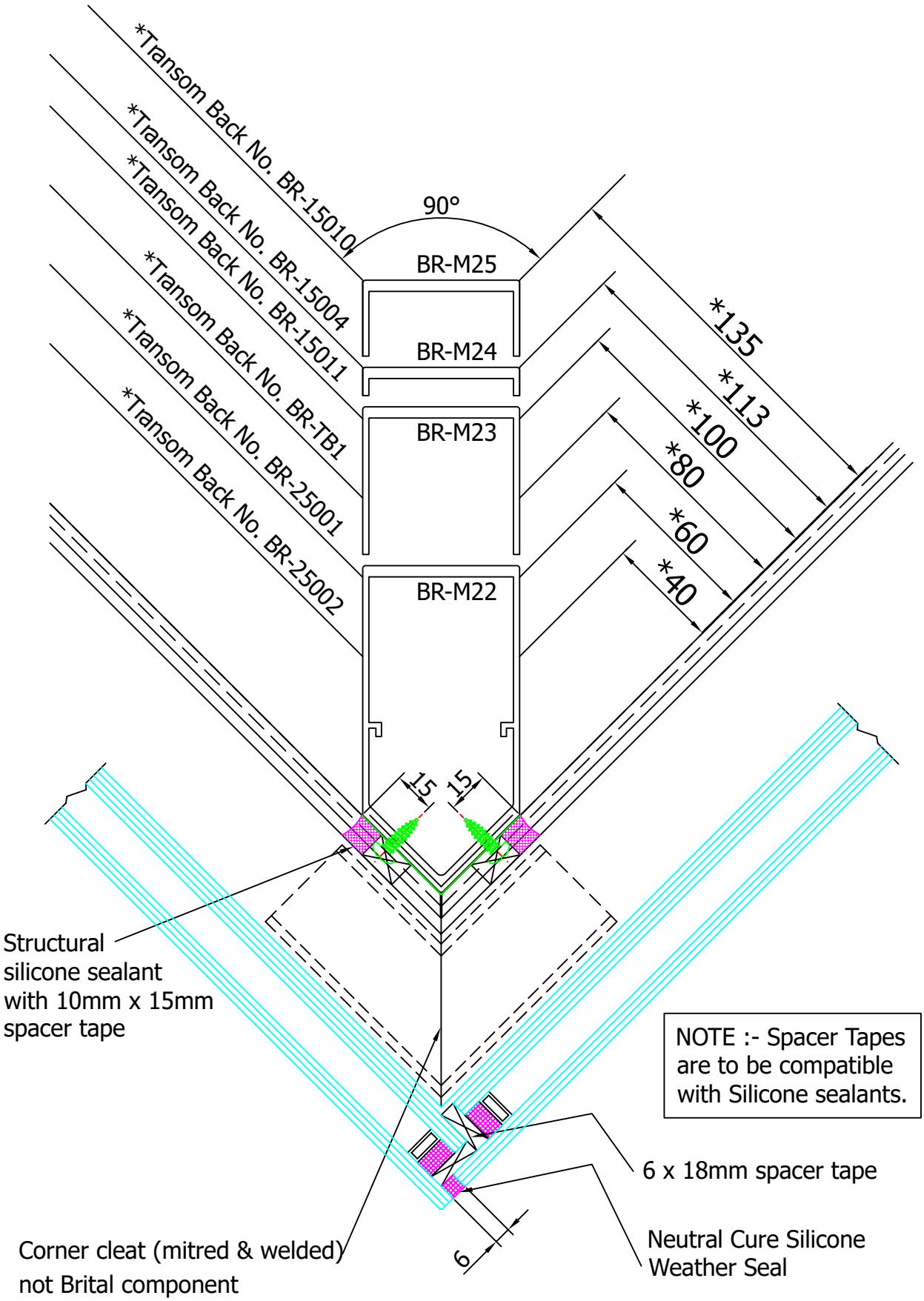

## Section31 - Intermediate Mullion Details (Including Corners)

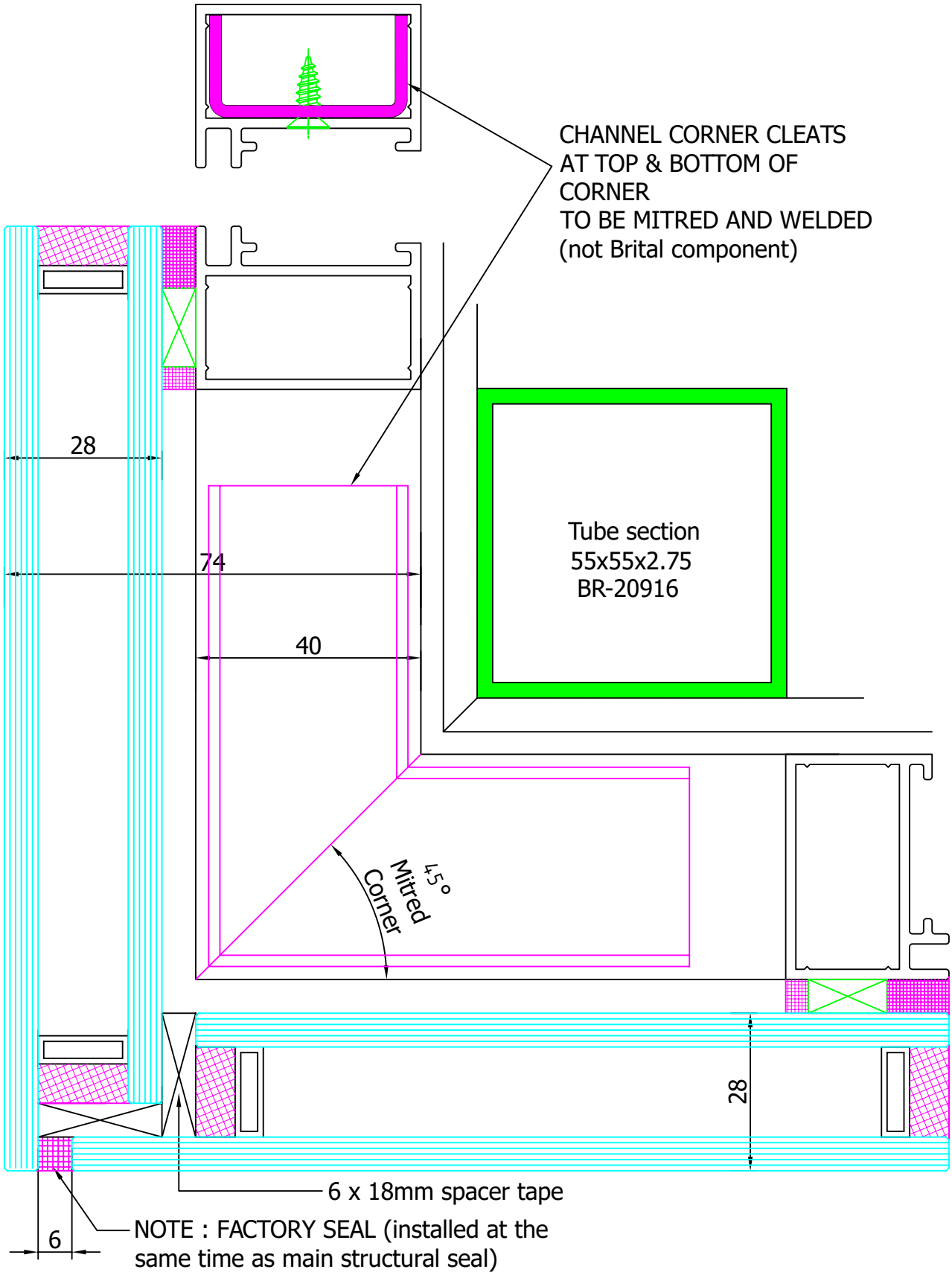

## Section31 - Intermediate Mullion Details (Including Corners)

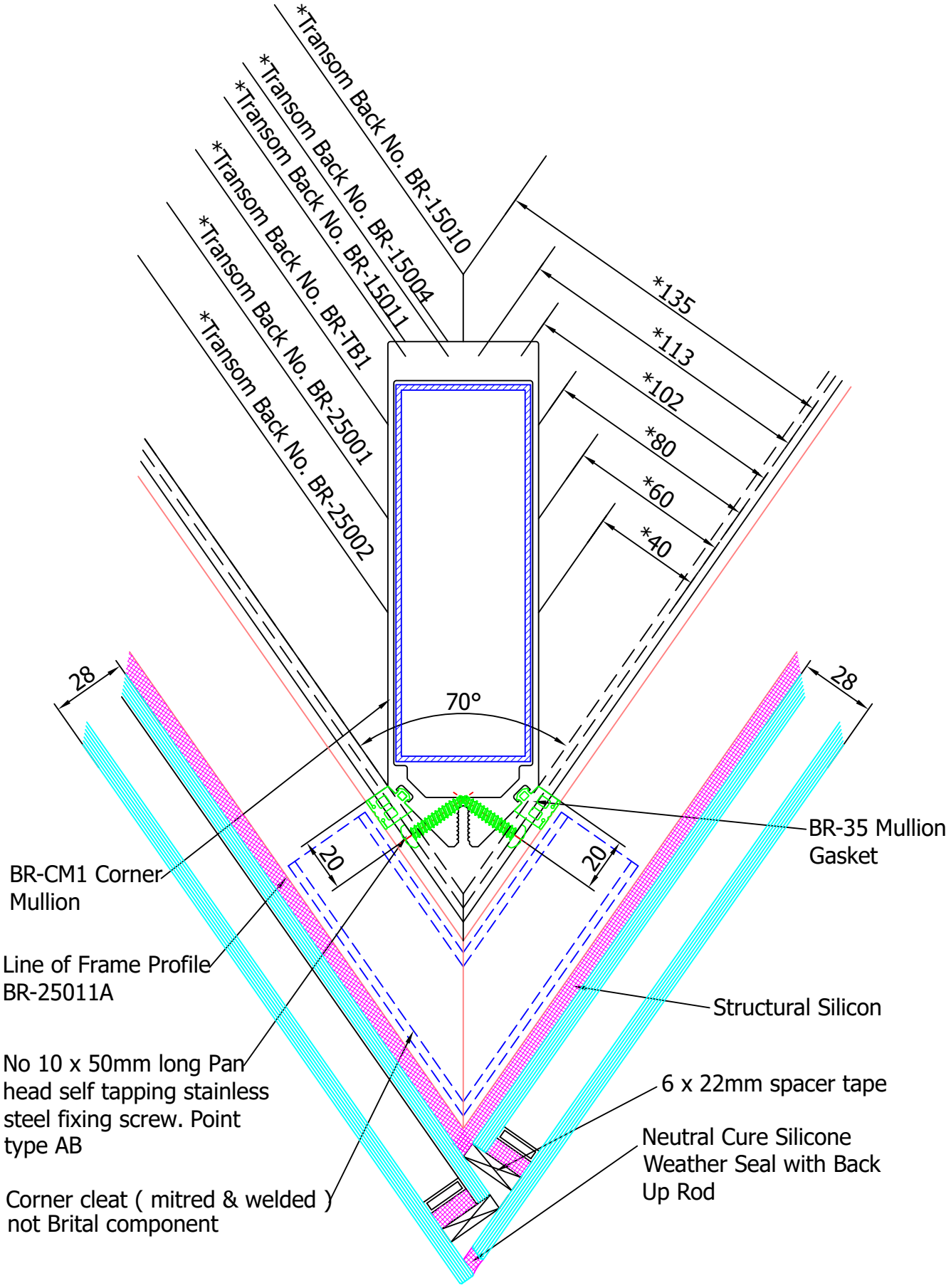

## Section31 - Intermediate Mullion Details (Including Corners)

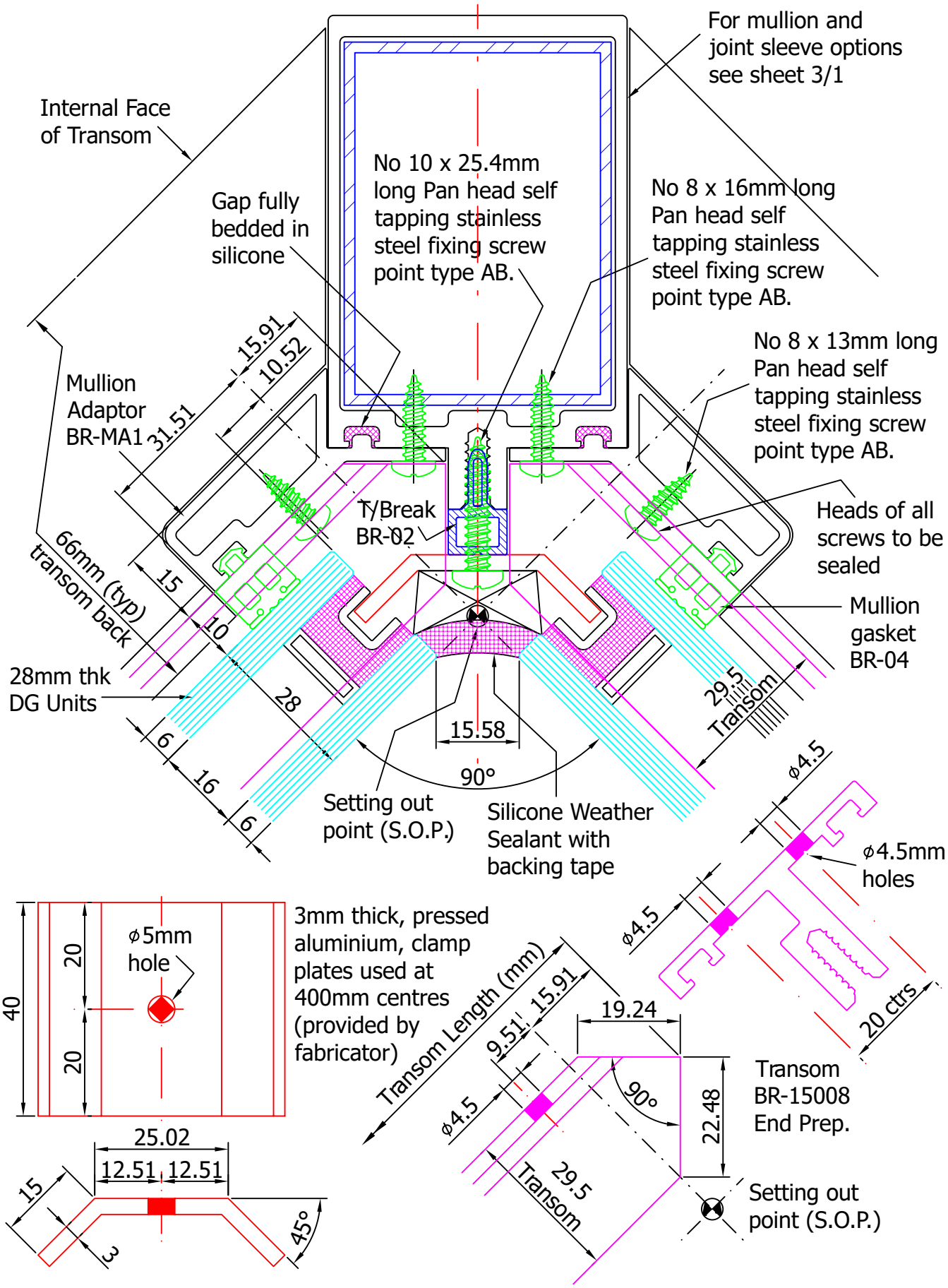

## Section31 - Intermediate Mullion Details (Including Corners)

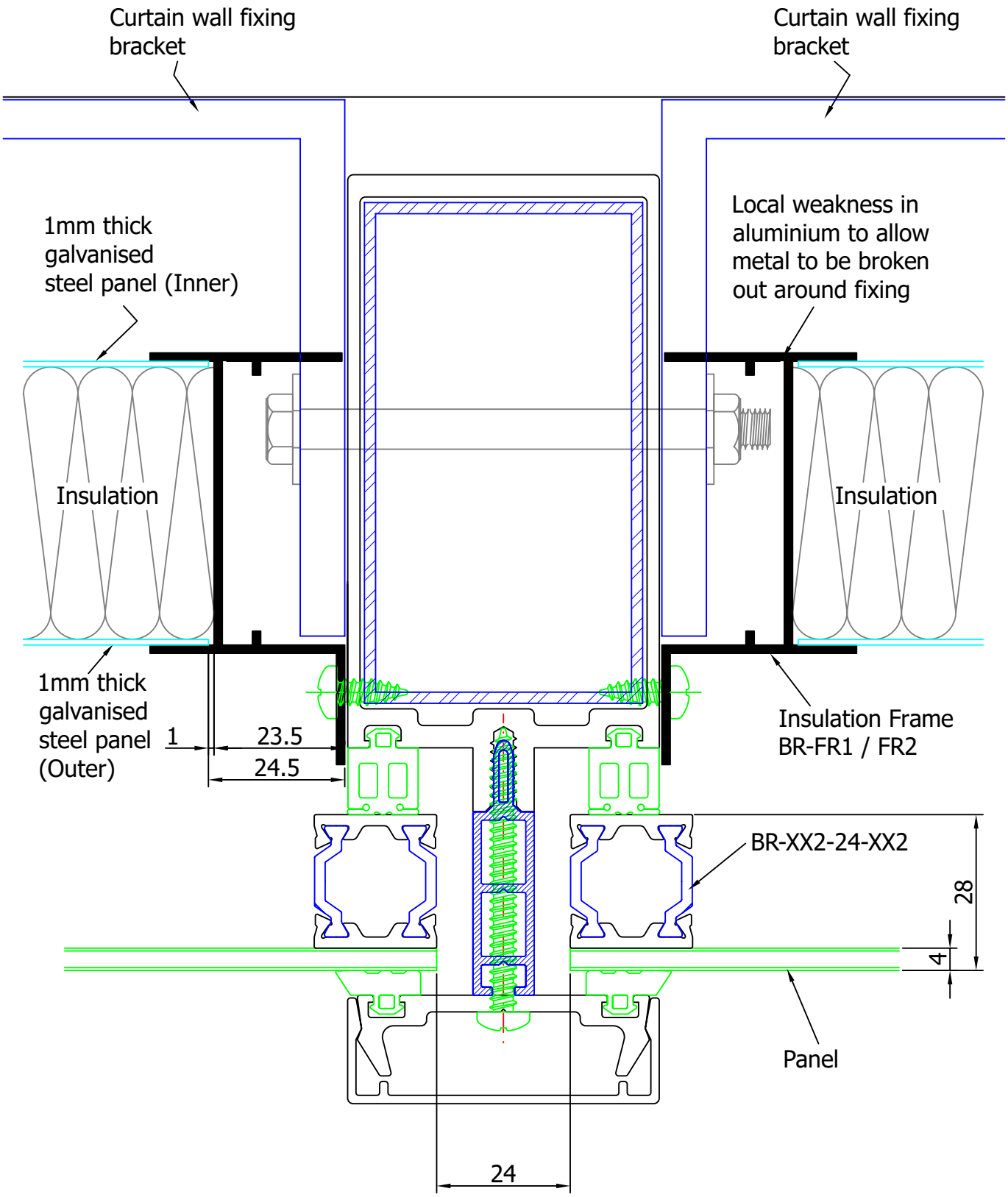

## Section31 - Intermediate Mullion Details (Including Corners)

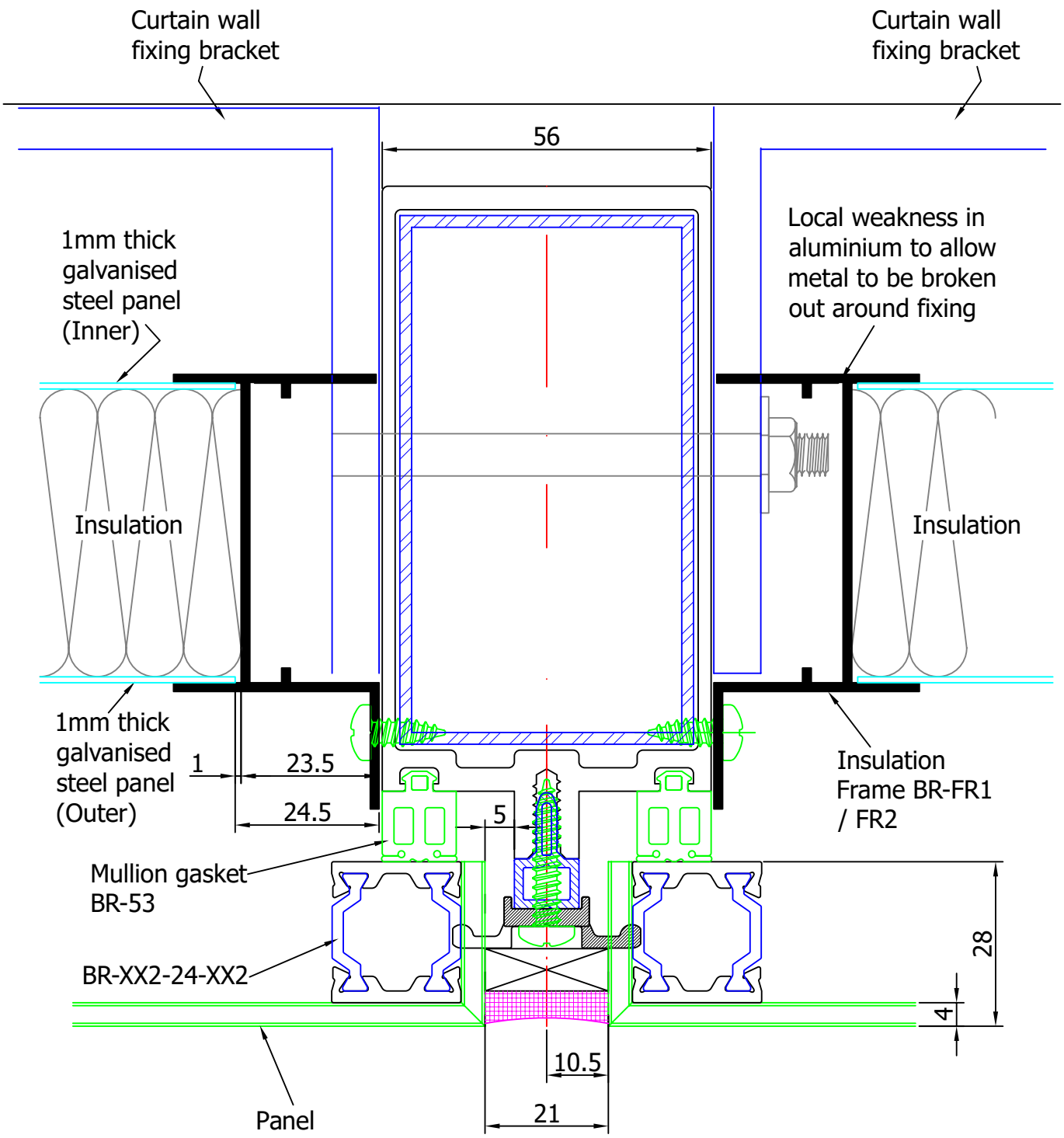

## Section31 - Intermediate Mullion Details (Including Corners)

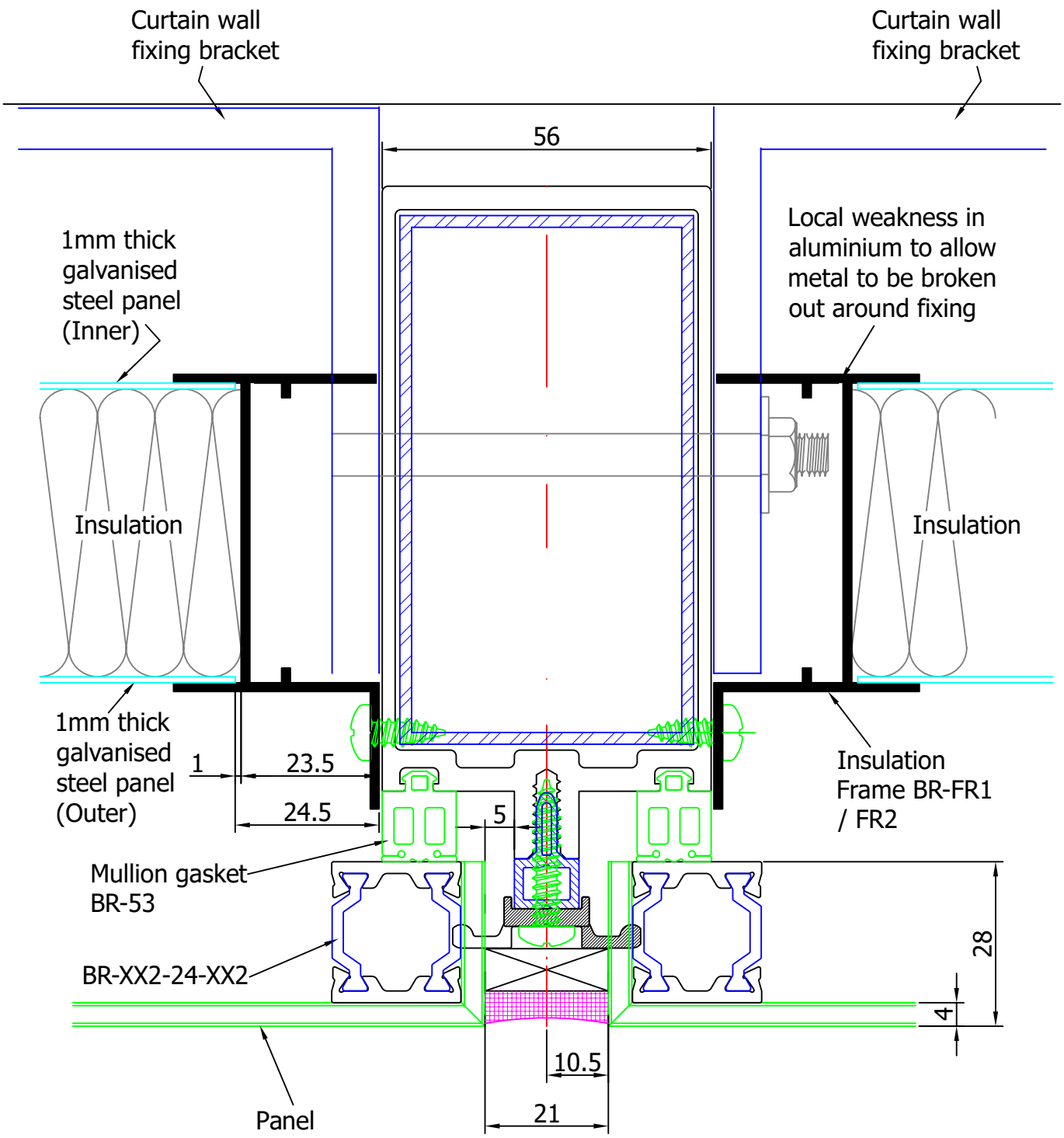

## Section31 - Intermediate Mullion Details (Including Corners)

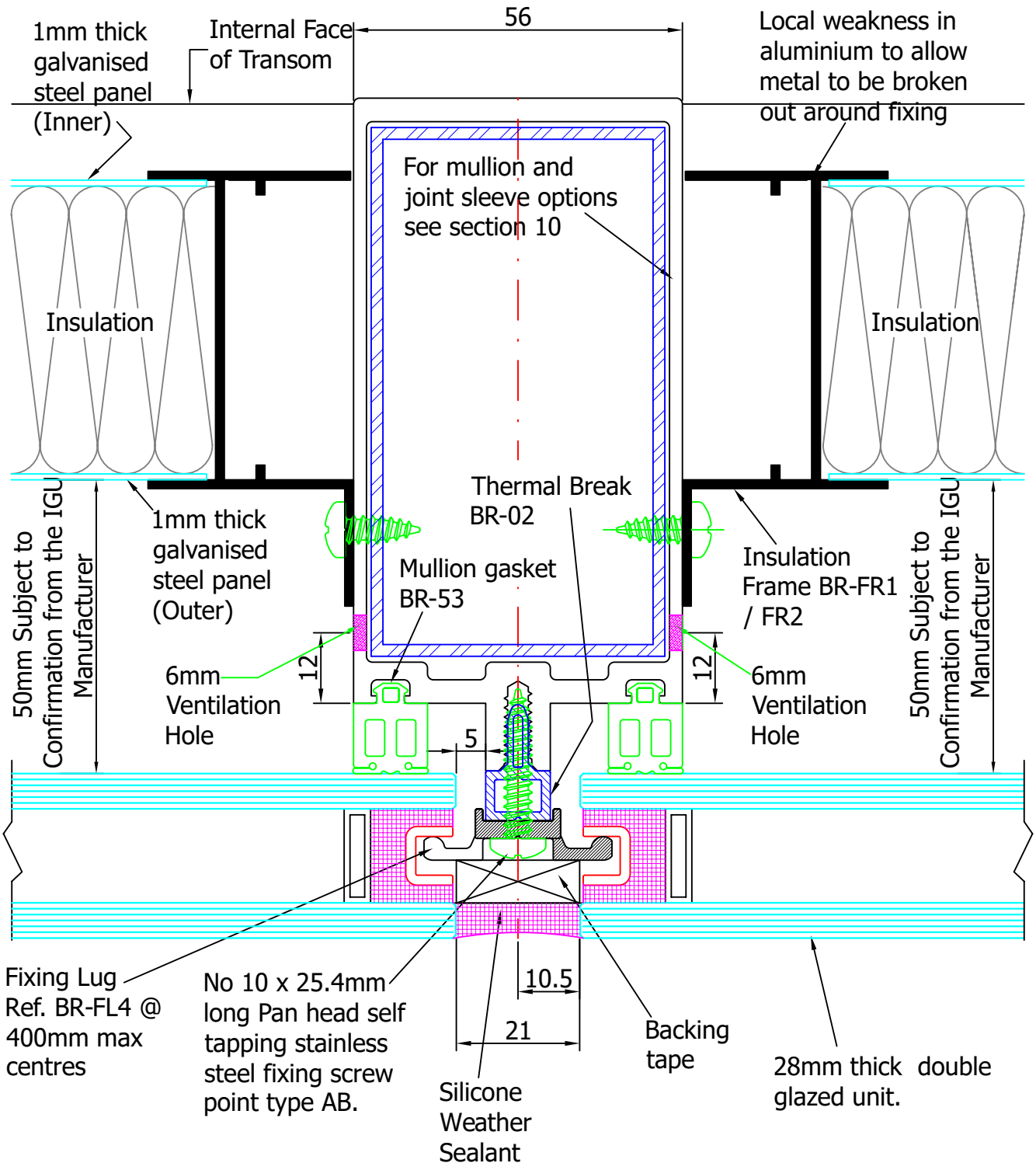

## Section31 - Intermediate Mullion Details (Including Corners)

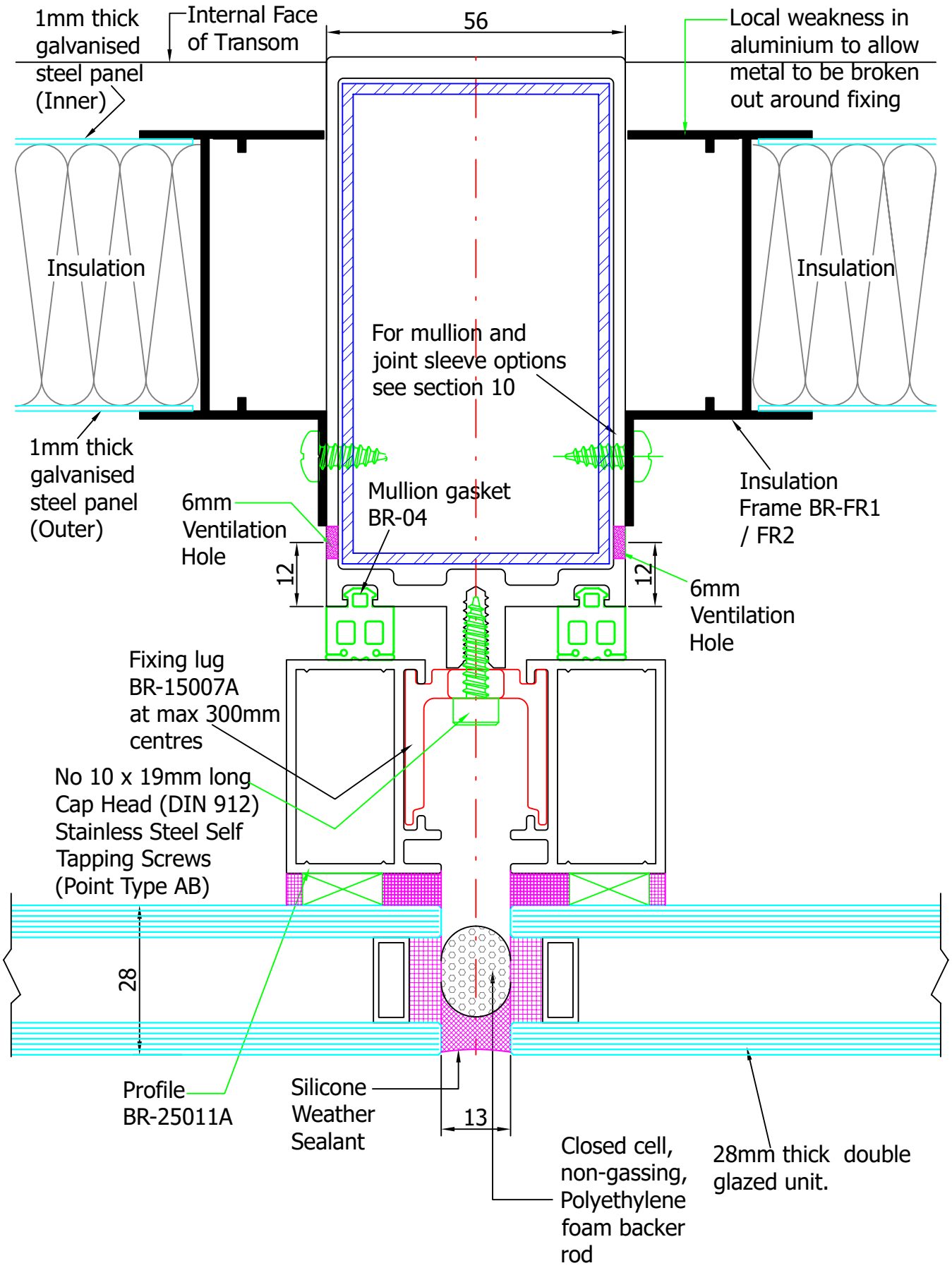

## Section32 - Intermediate One Part Transom Details

* : For details of Glazing Support see section 60.

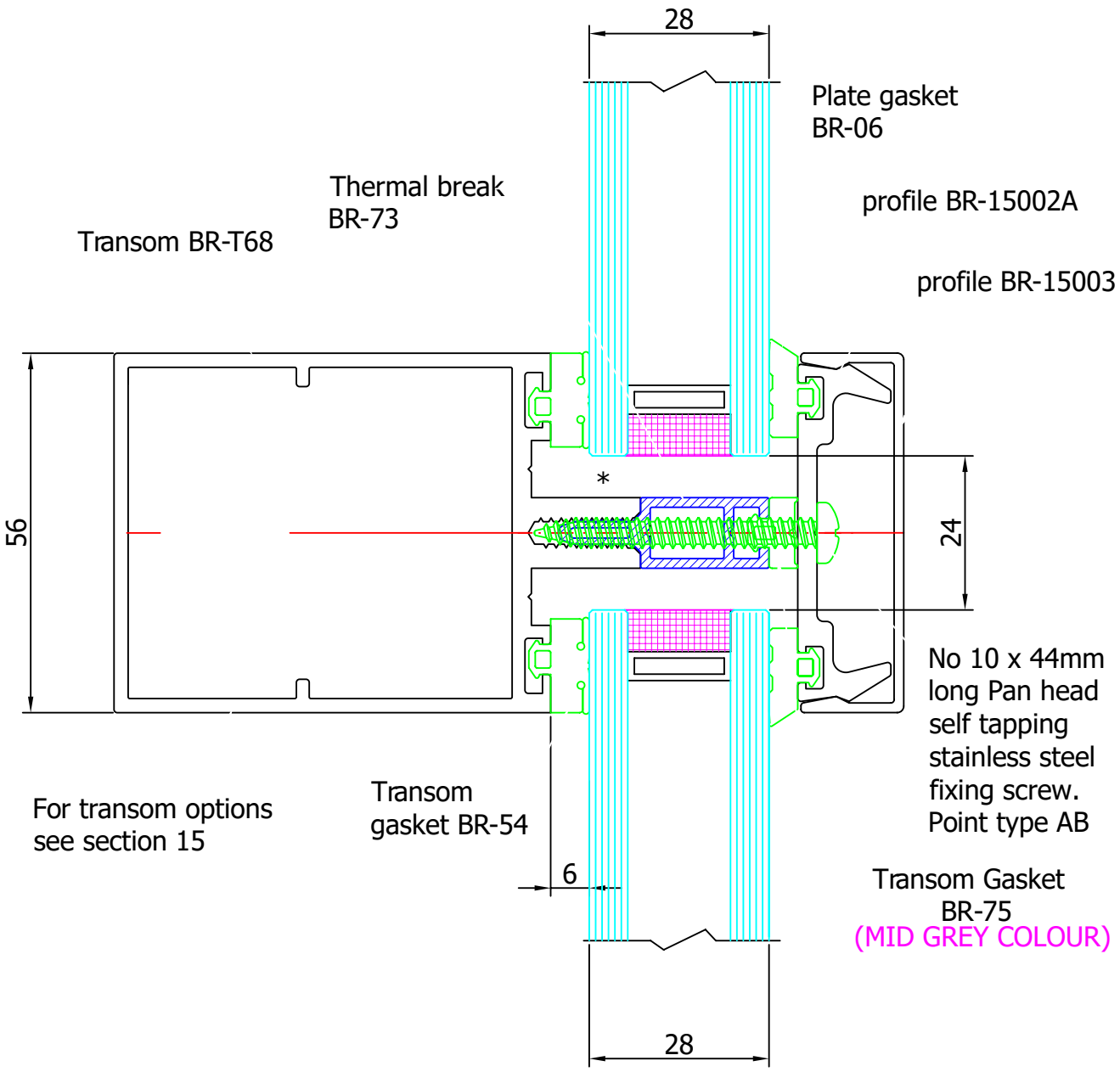

## Section32 - Intermediate One Part Transom Details

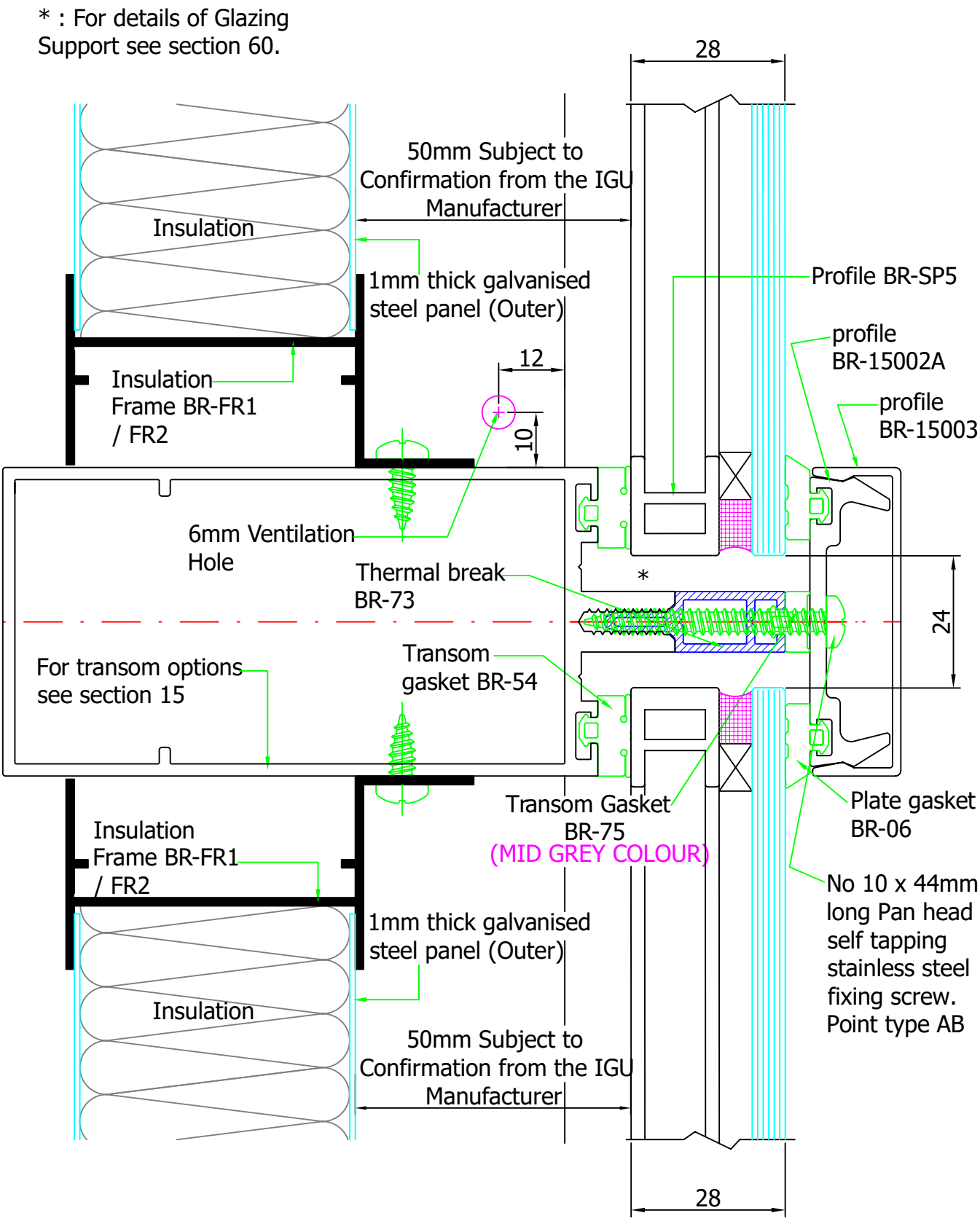

## Section32 - Intermediate One Part Transom Details

* : For details of Glazing Support see section 60.

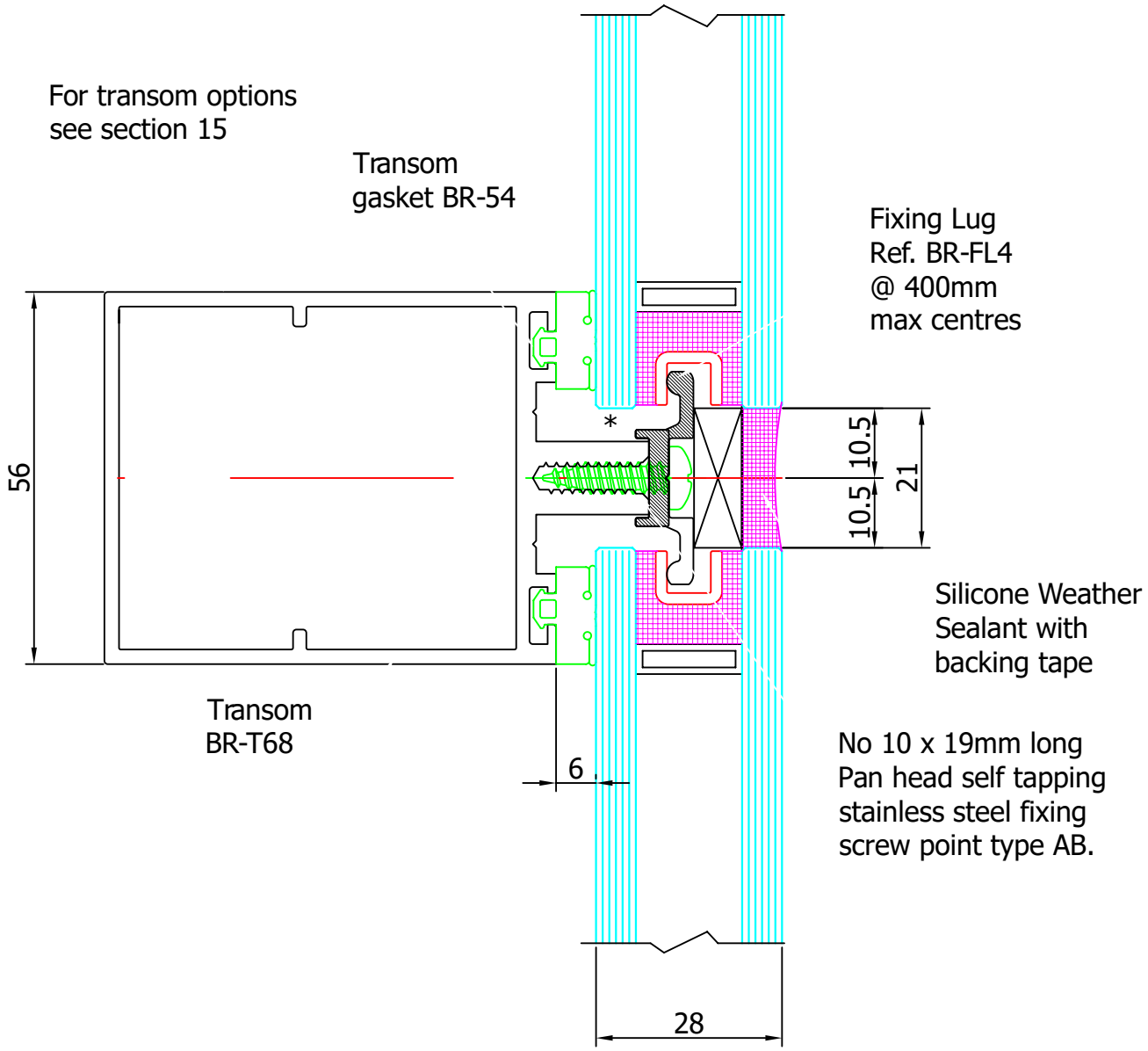

## Section32 - Intermediate One Part Transom Details

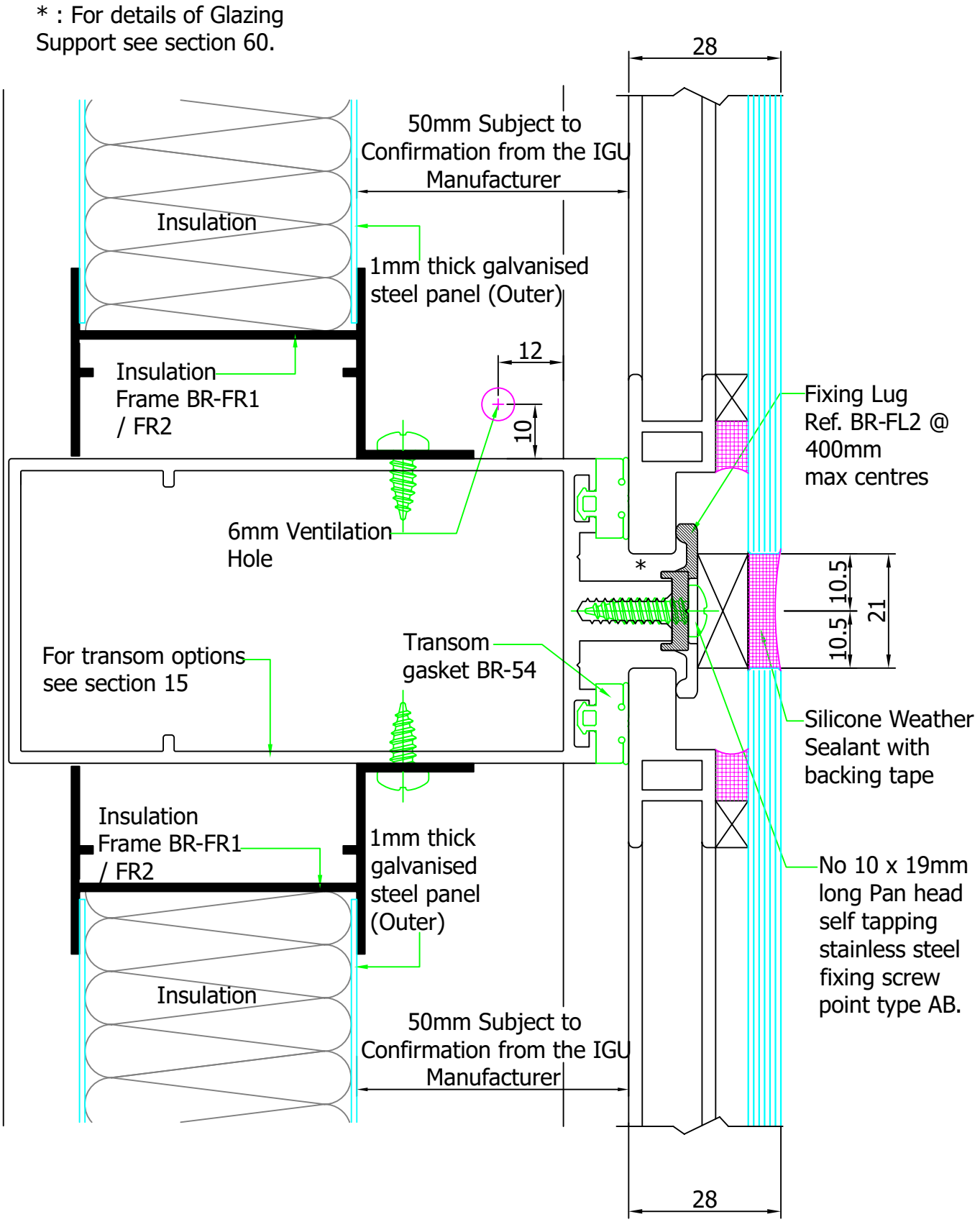

## Section32 - Intermediate One Part Transom Details

* : For details of Glazing Support see section 60.

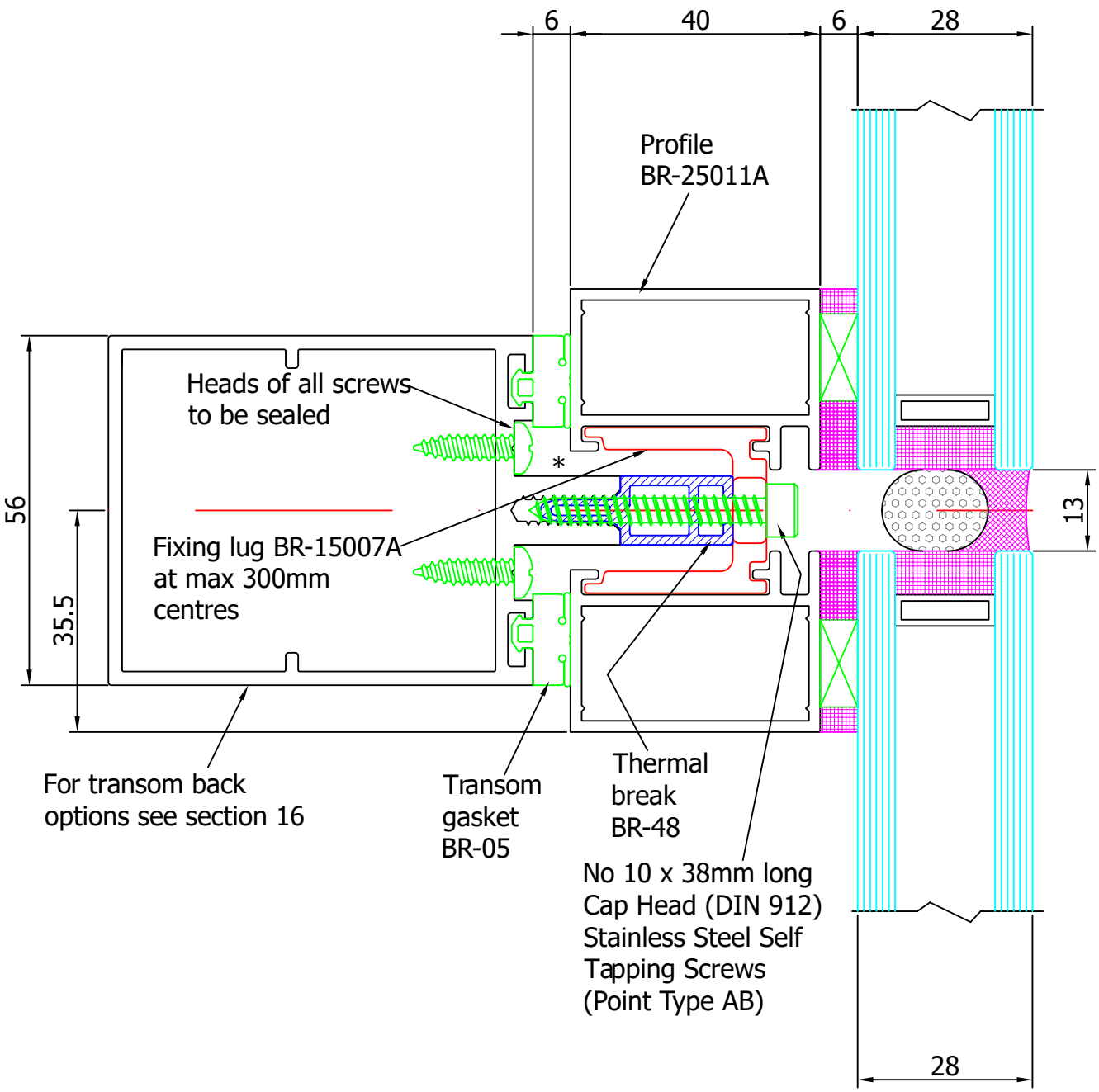

## Section32 - Intermediate One Part Transom Details

* : For details of Glazing Support see section 60.

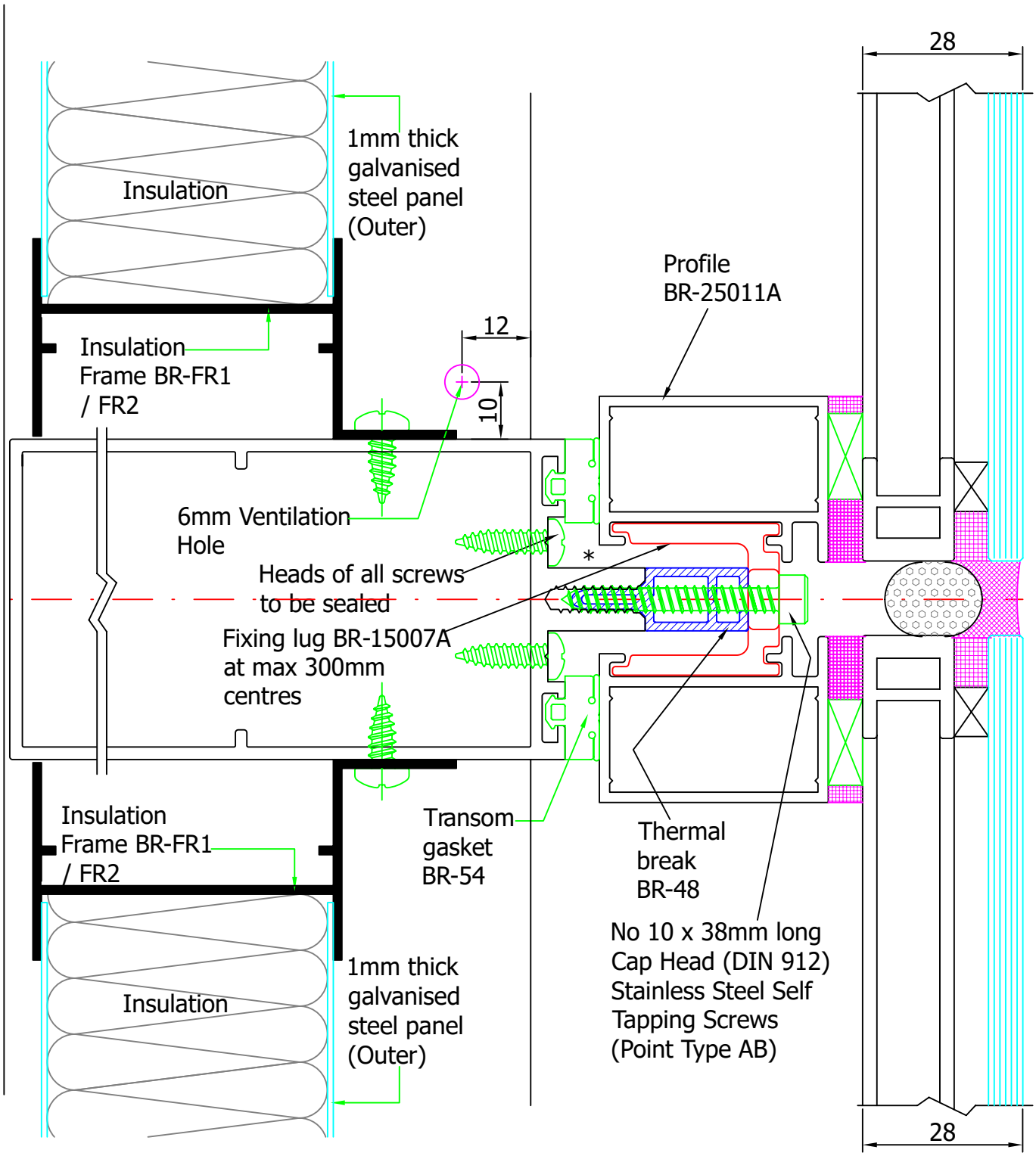

## Section32 - Intermediate One Part Transom Details

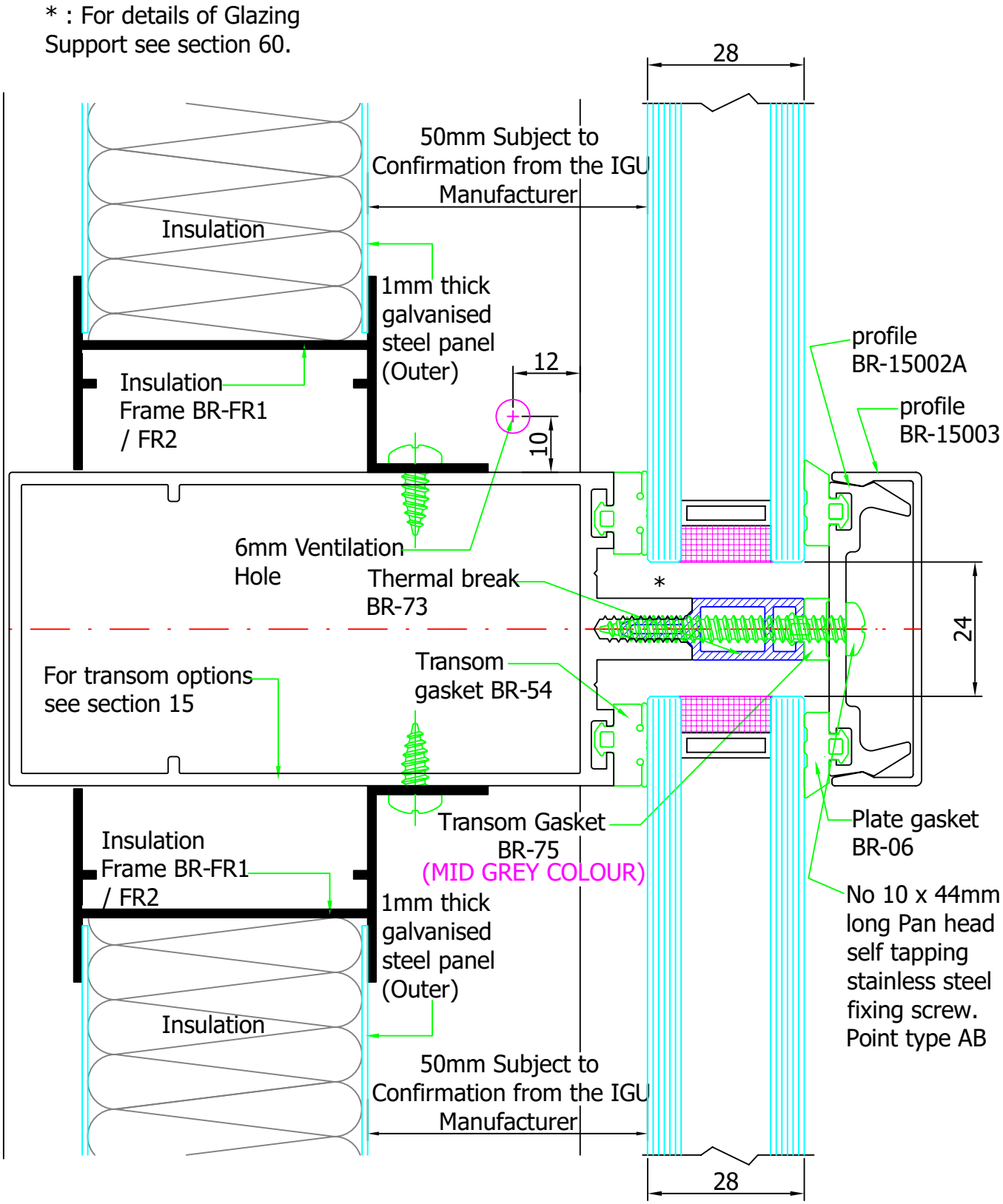

## Section32 - Intermediate One Part Transom Details

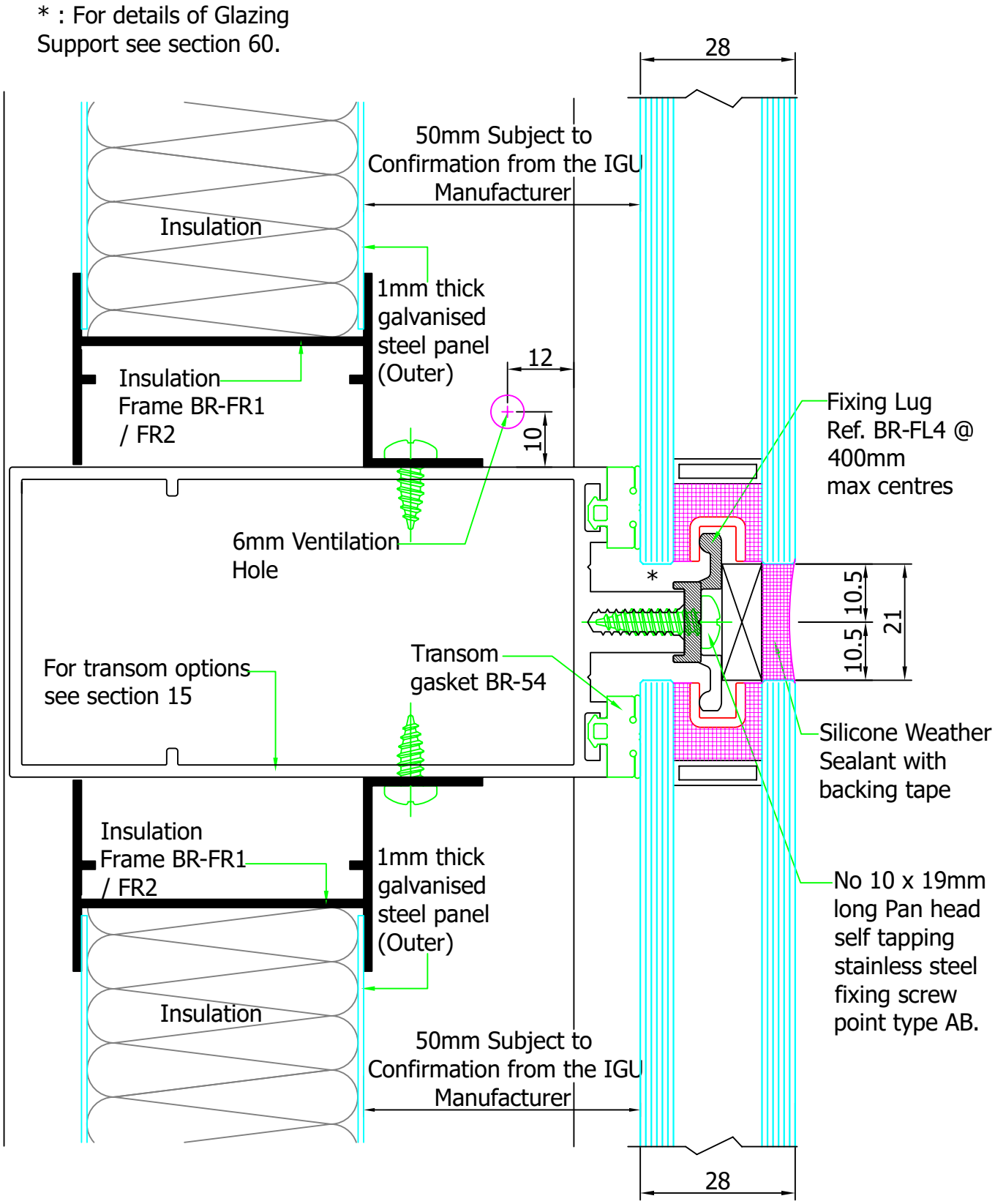

## Section32 - Intermediate One Part Transom Details

* : For details of Glazing Support see section 60.

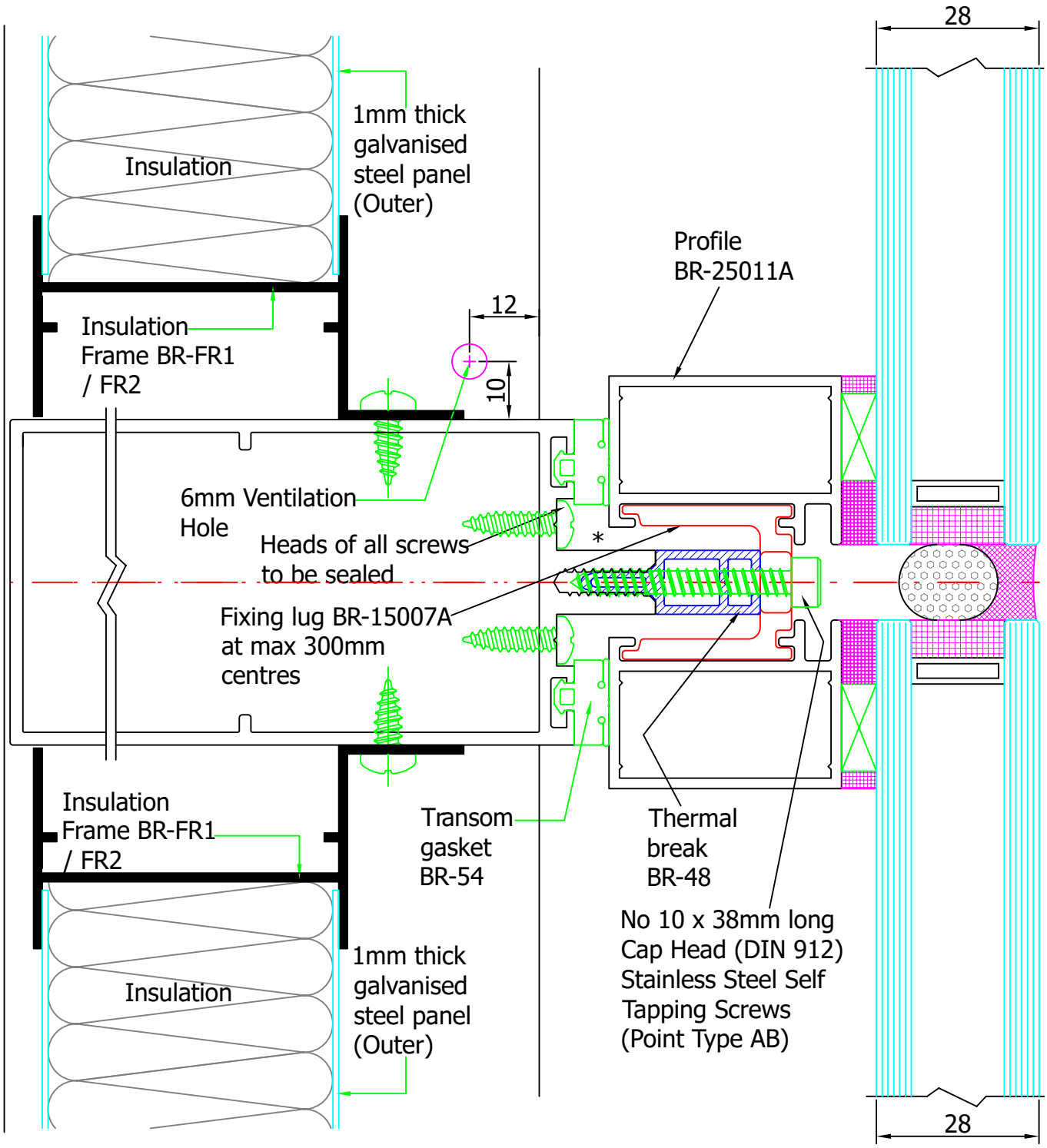

## Section32 - Intermediate One Part Transom Details

* : For details of Glazing Support see section 60.

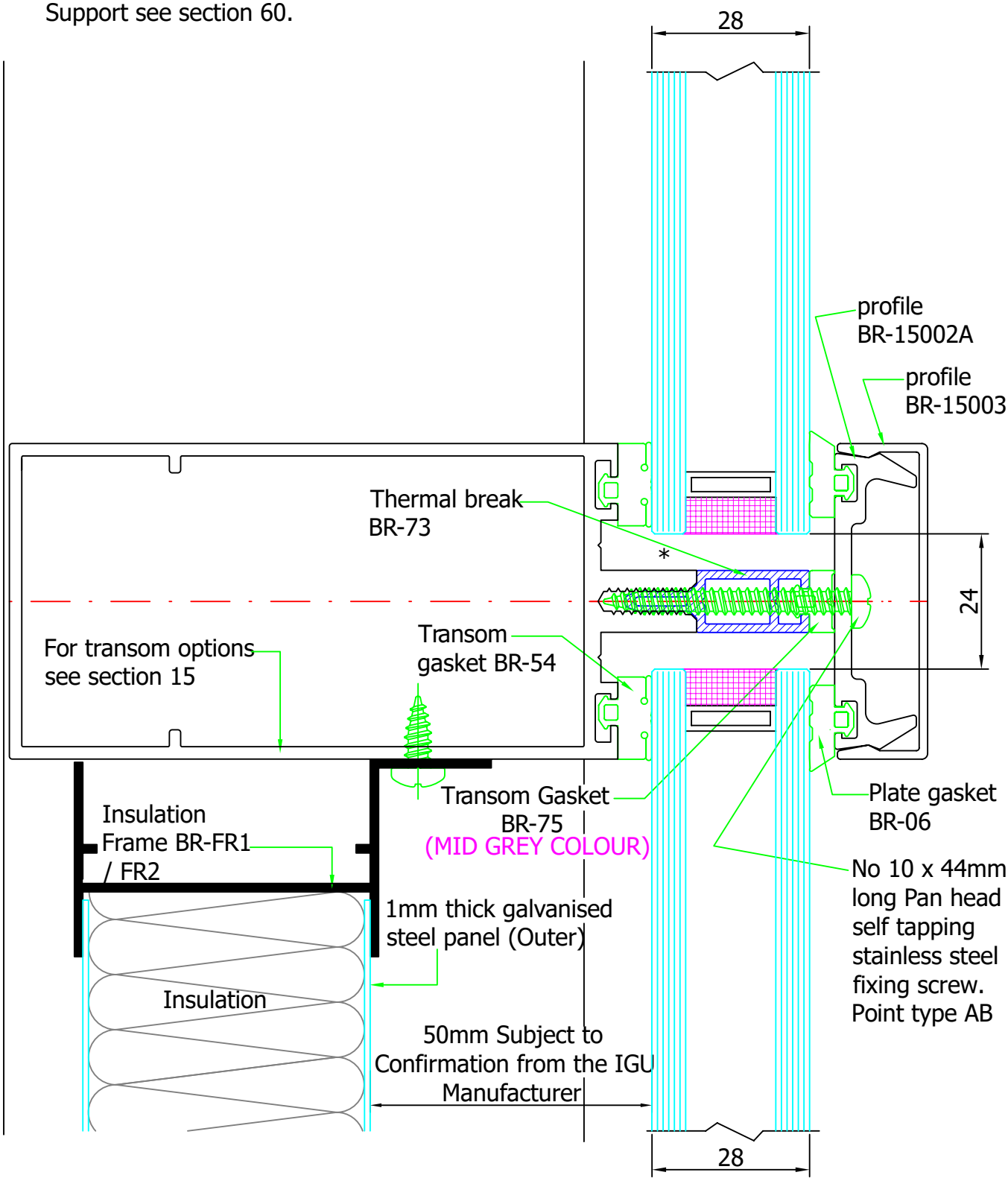

## Section32 - Intermediate One Part Transom Details

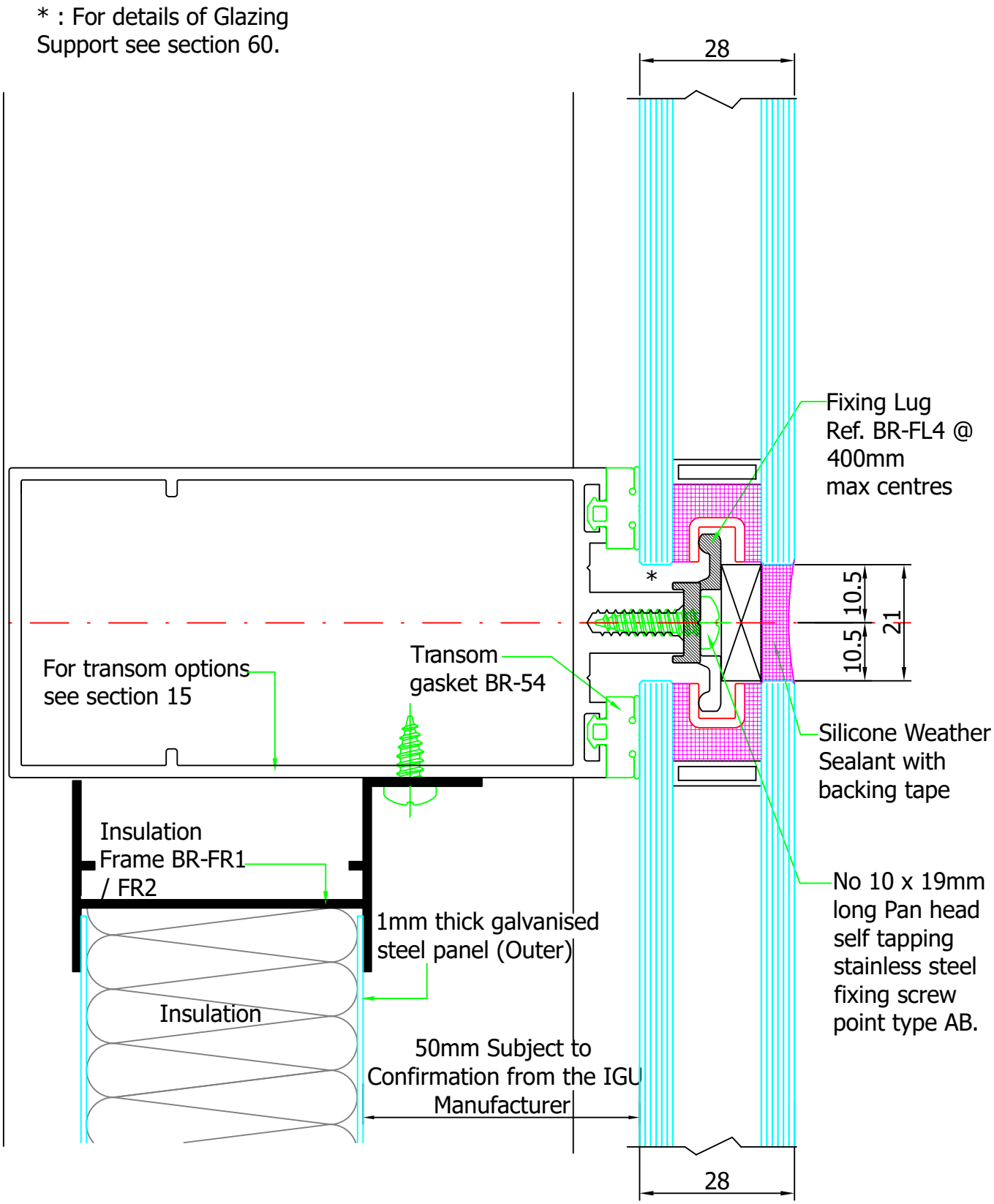

## Section32 - Intermediate One Part Transom Details

* : For details of Glazing Support see section 60.

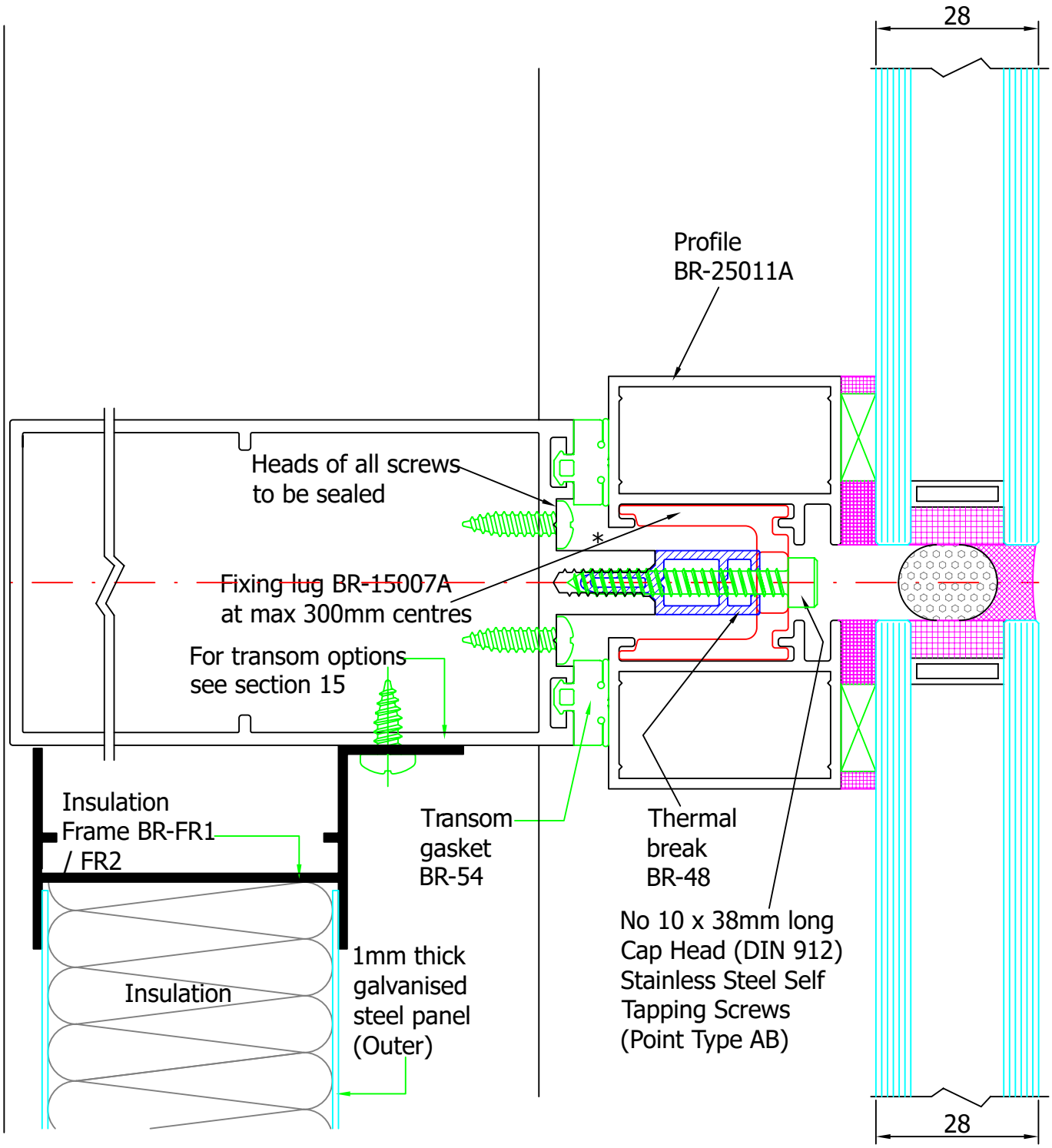

## Section33 - Intermediate Two Part Transom Details

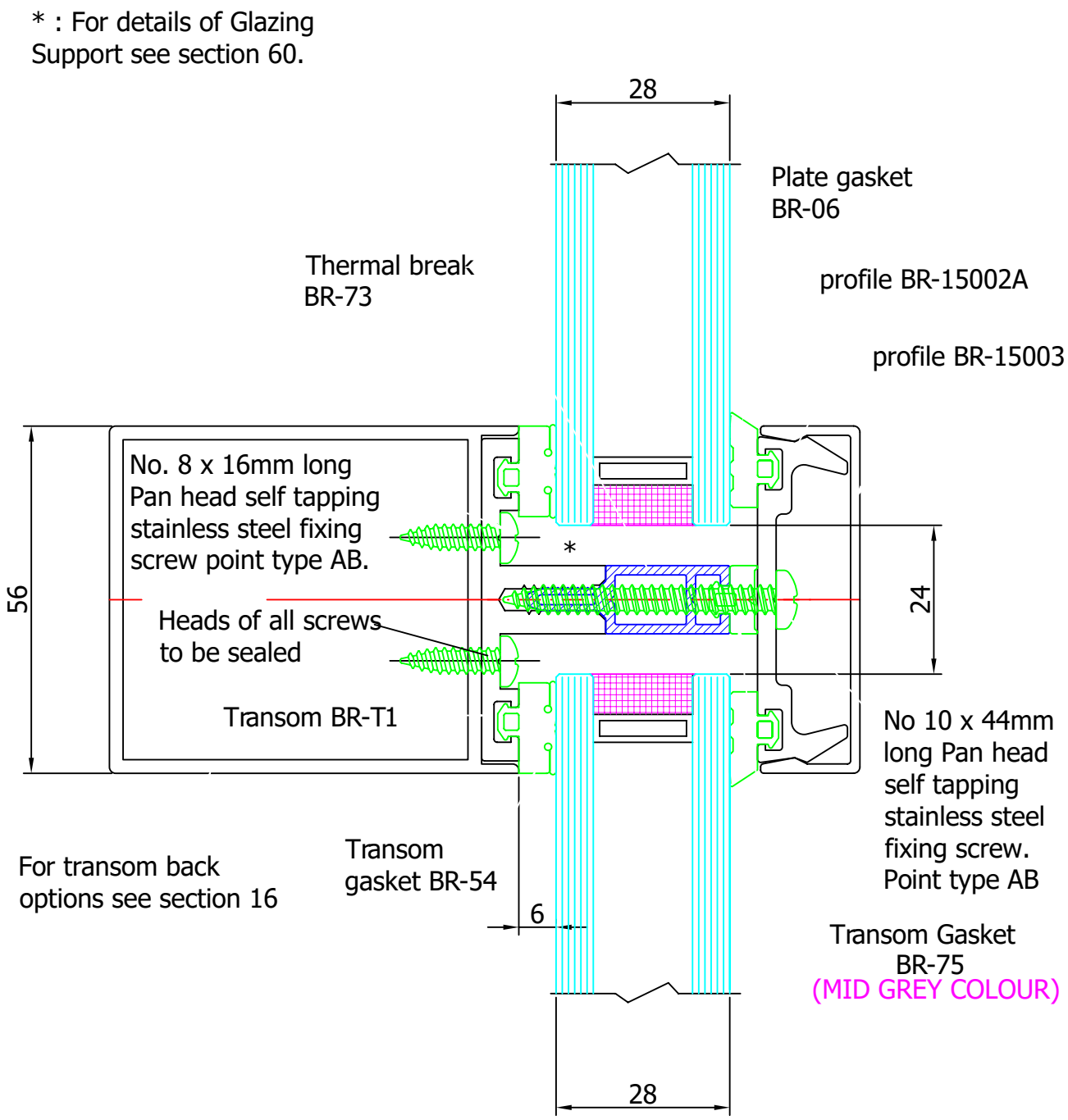

## Section33 - Intermediate Two Part Transom Details

* : For details of Glazing Support see section 60.

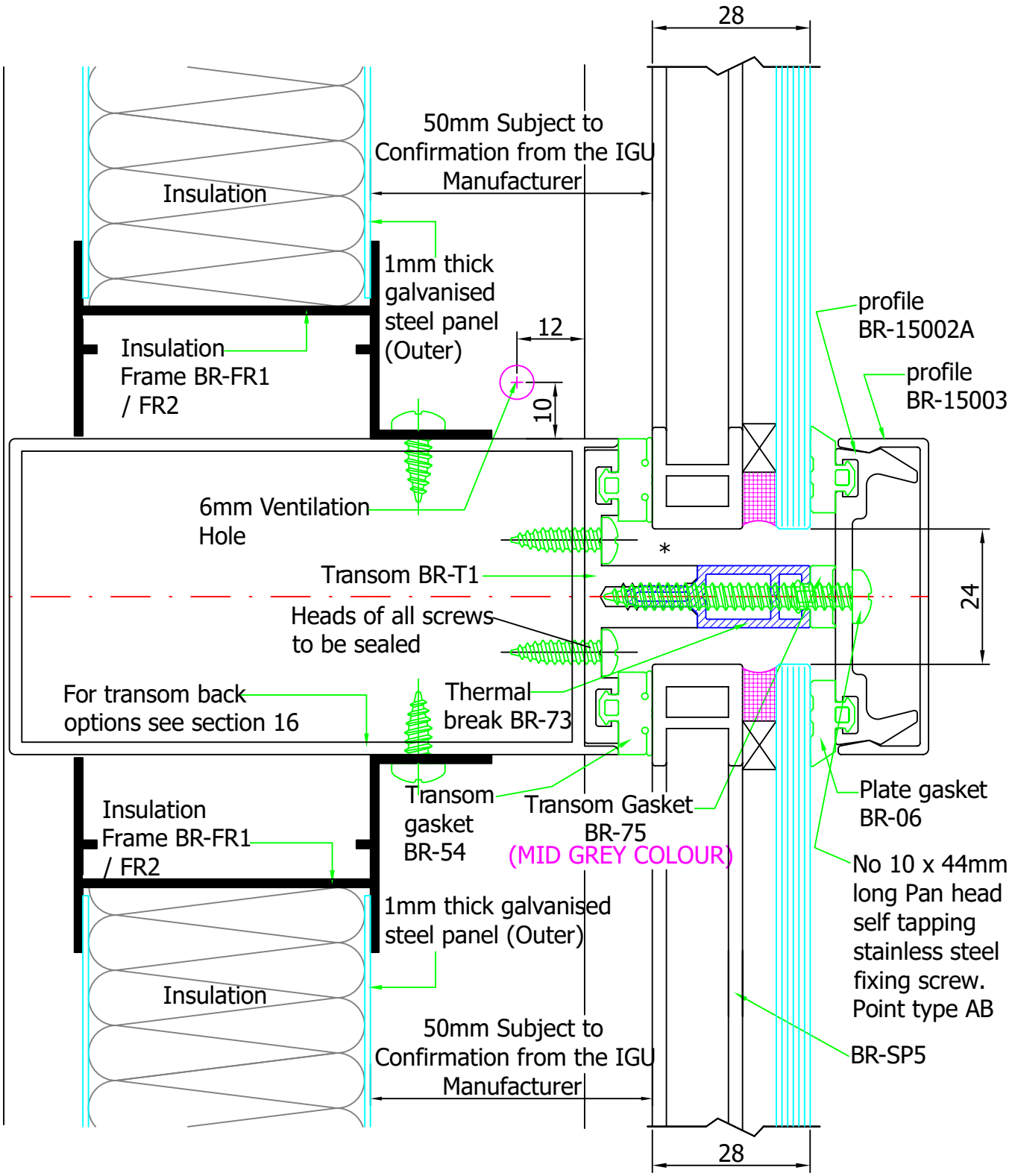

## Section33 - Intermediate Two Part Transom Details

* : For details of Glazing Support see section 60.

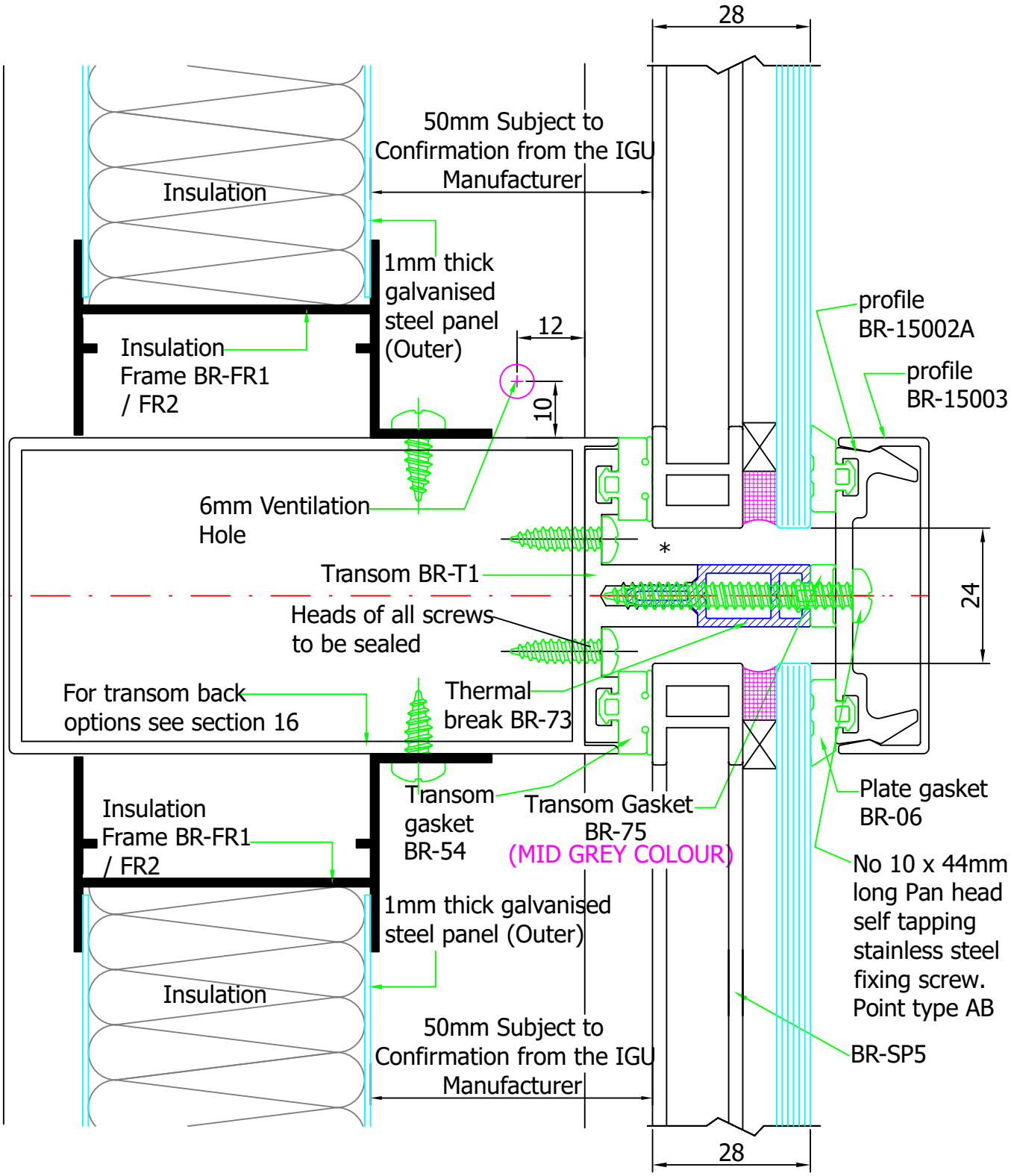

## Section33 - Intermediate Two Part Transom Details

* : For details of Glazing Support see section 60.

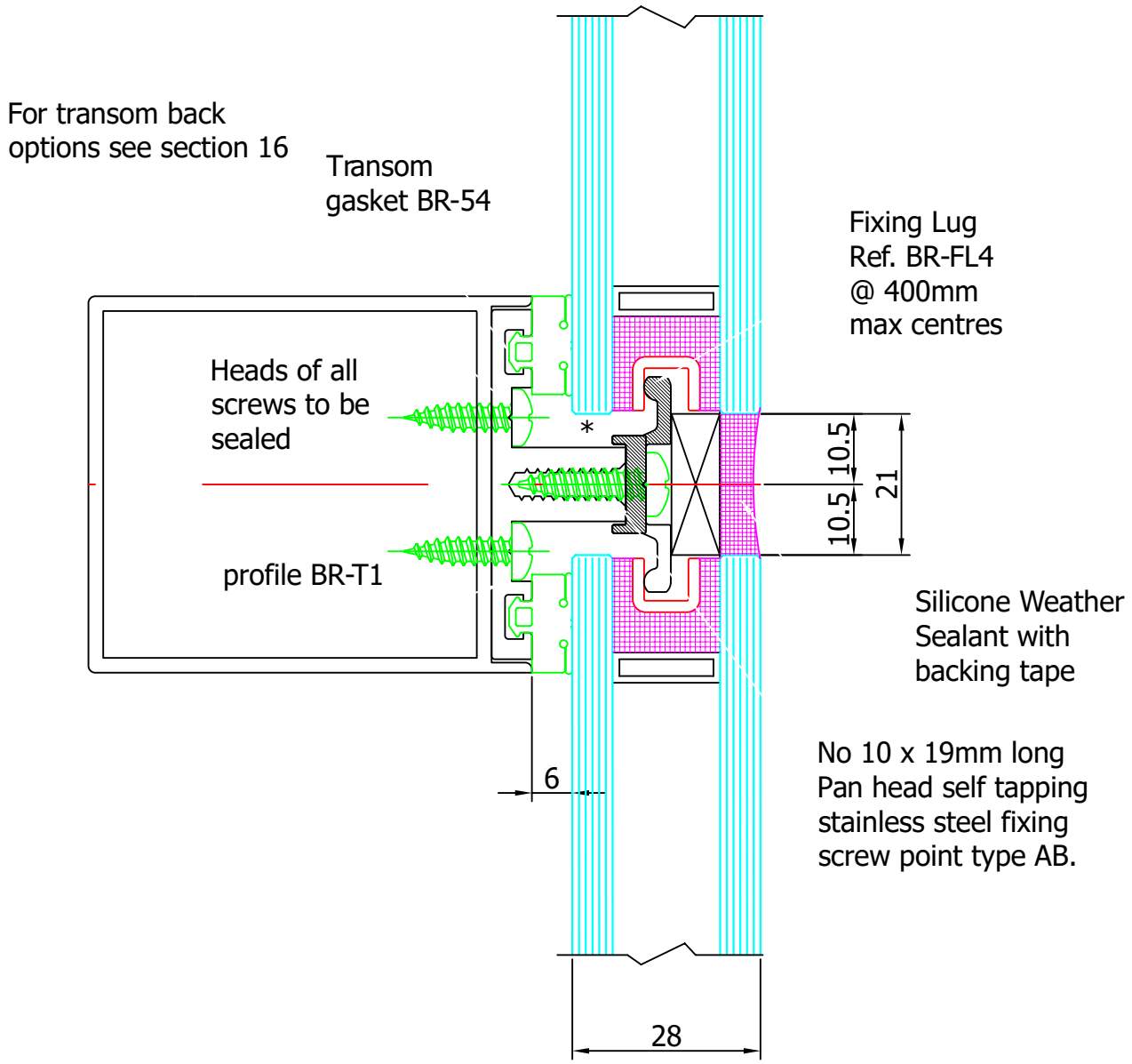

## Section33 - Intermediate Two Part Transom Details

* : For details of Glazing Support see section 60.

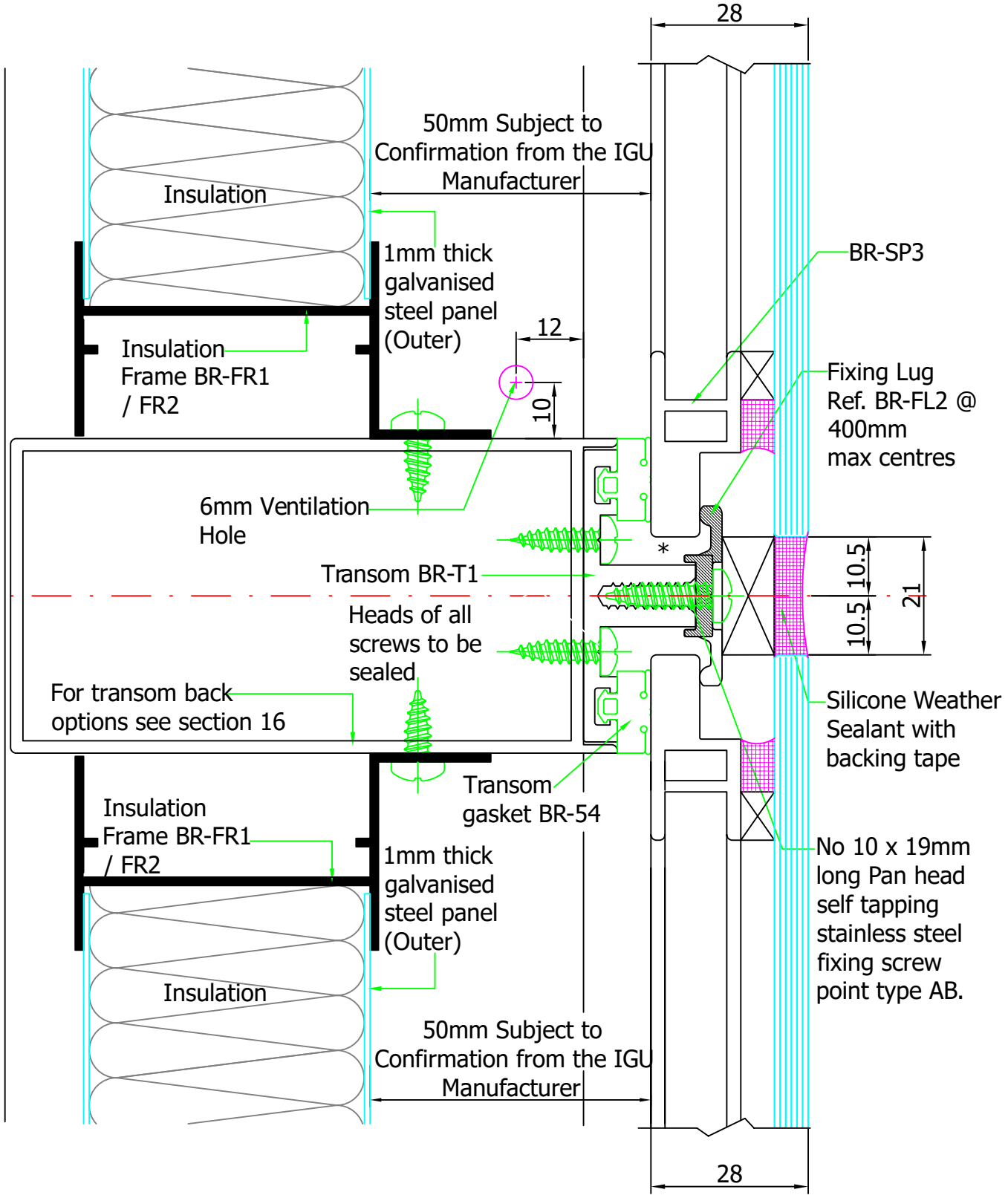

## Section33 - Intermediate Two Part Transom Details

* : For details of Glazing Support see section 60.

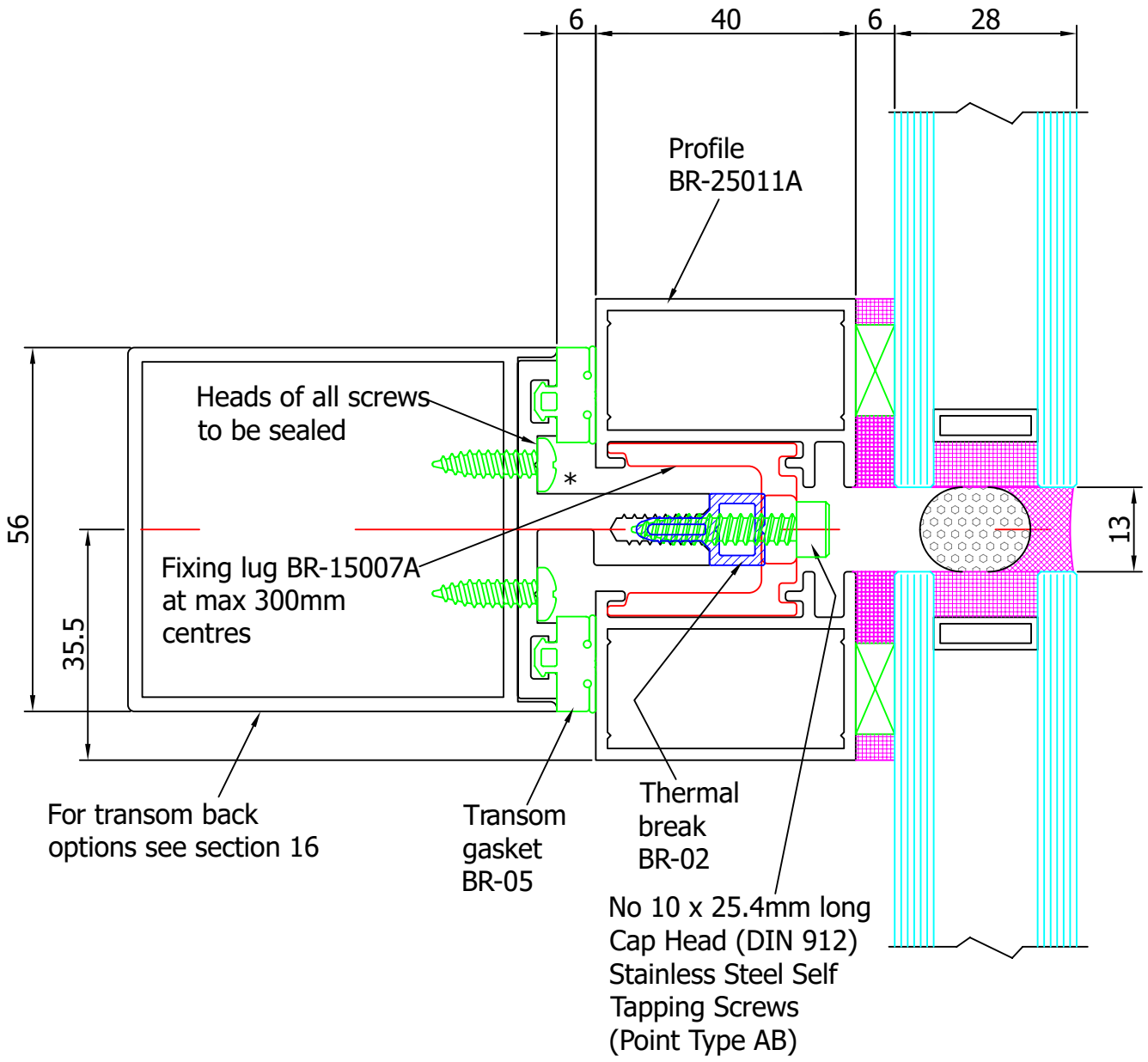

## Section33 - Intermediate Two Part Transom Details

* : For details of Glazing Support see section 60.

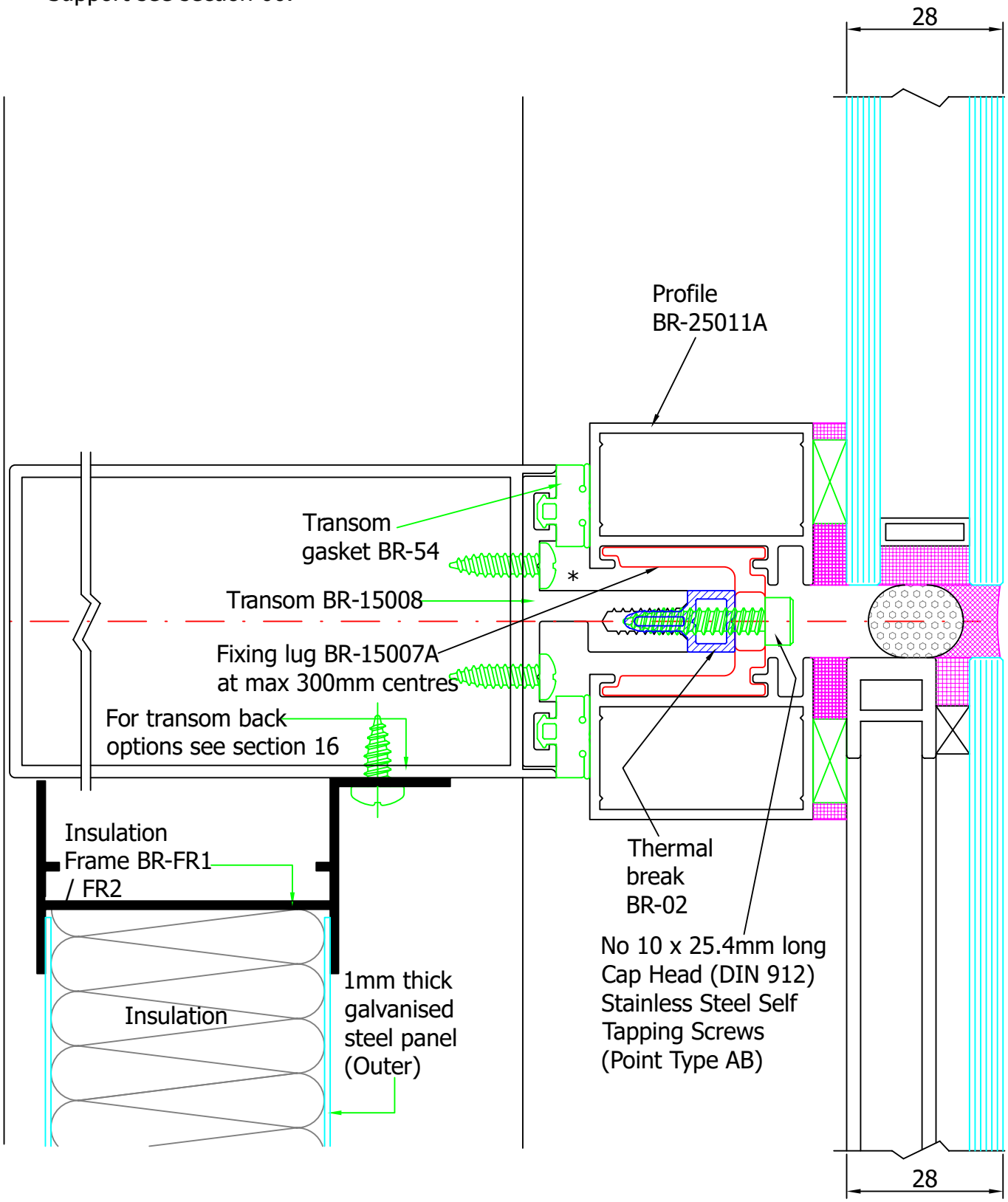

## Section33 - Intermediate Two Part Transom Details

Where movement of more than +/- 2mm is required at expansion joints use this expansion joint detail.

* : For details of Glazing Support see section 60.

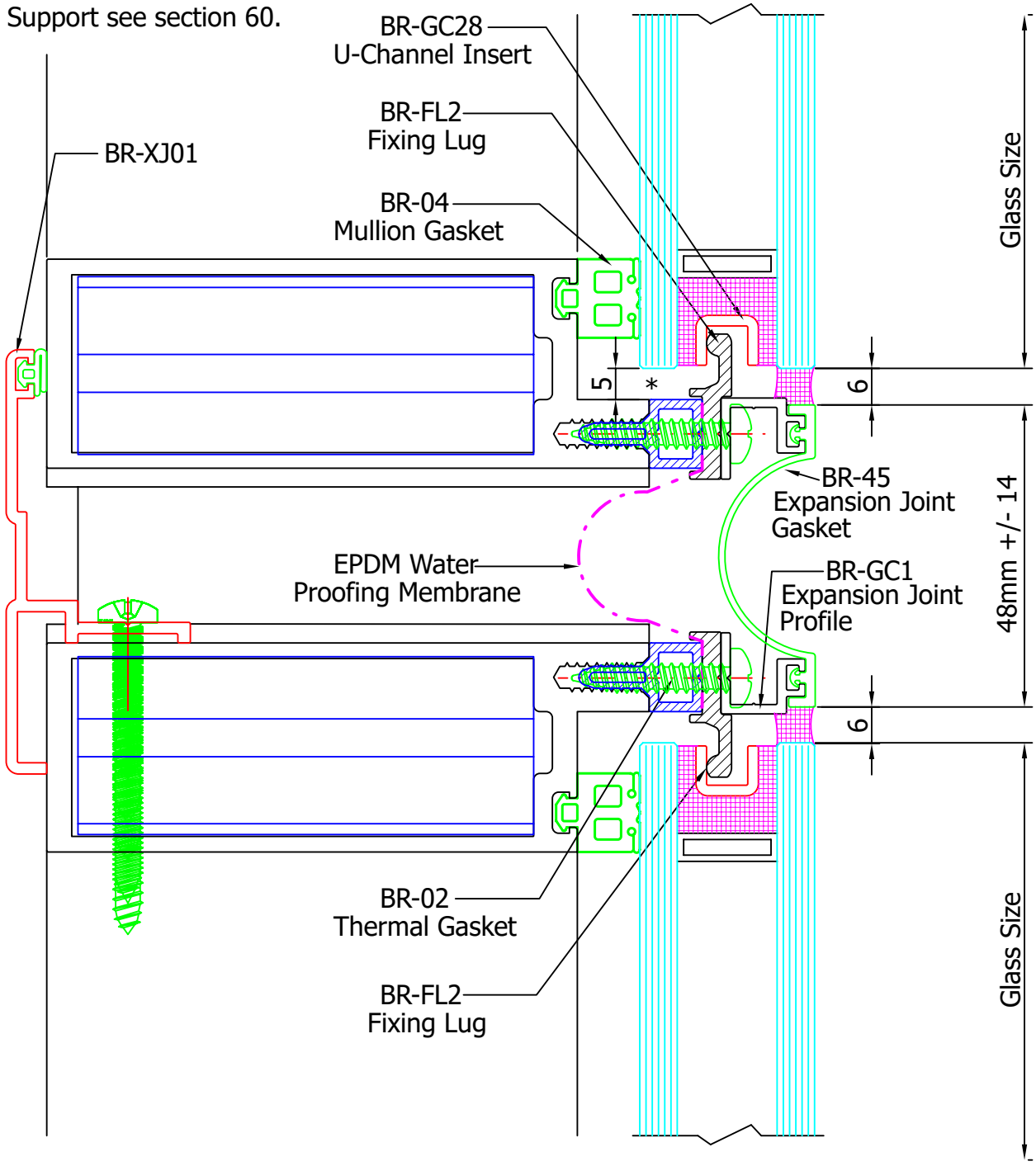

## Section33 - Intermediate Two Part Transom Details

* : For details of Glazing Support see section 60.

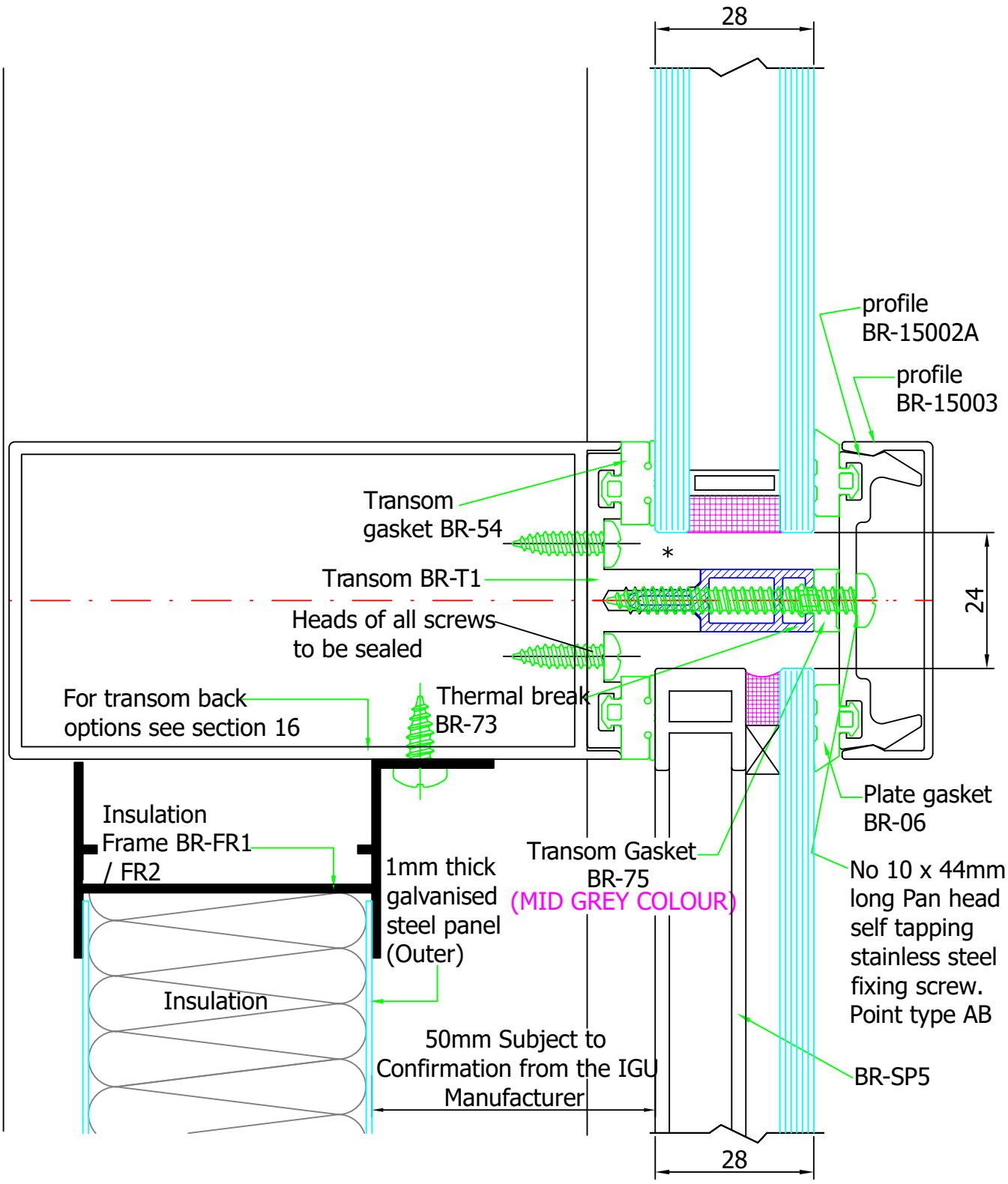

## Section33 - Intermediate Two Part Transom Details

BRITAL CW56 Stick Curtain Walling System
Capped Transom Expansion Joint Detail - Fixed DGU
Over Spandrel

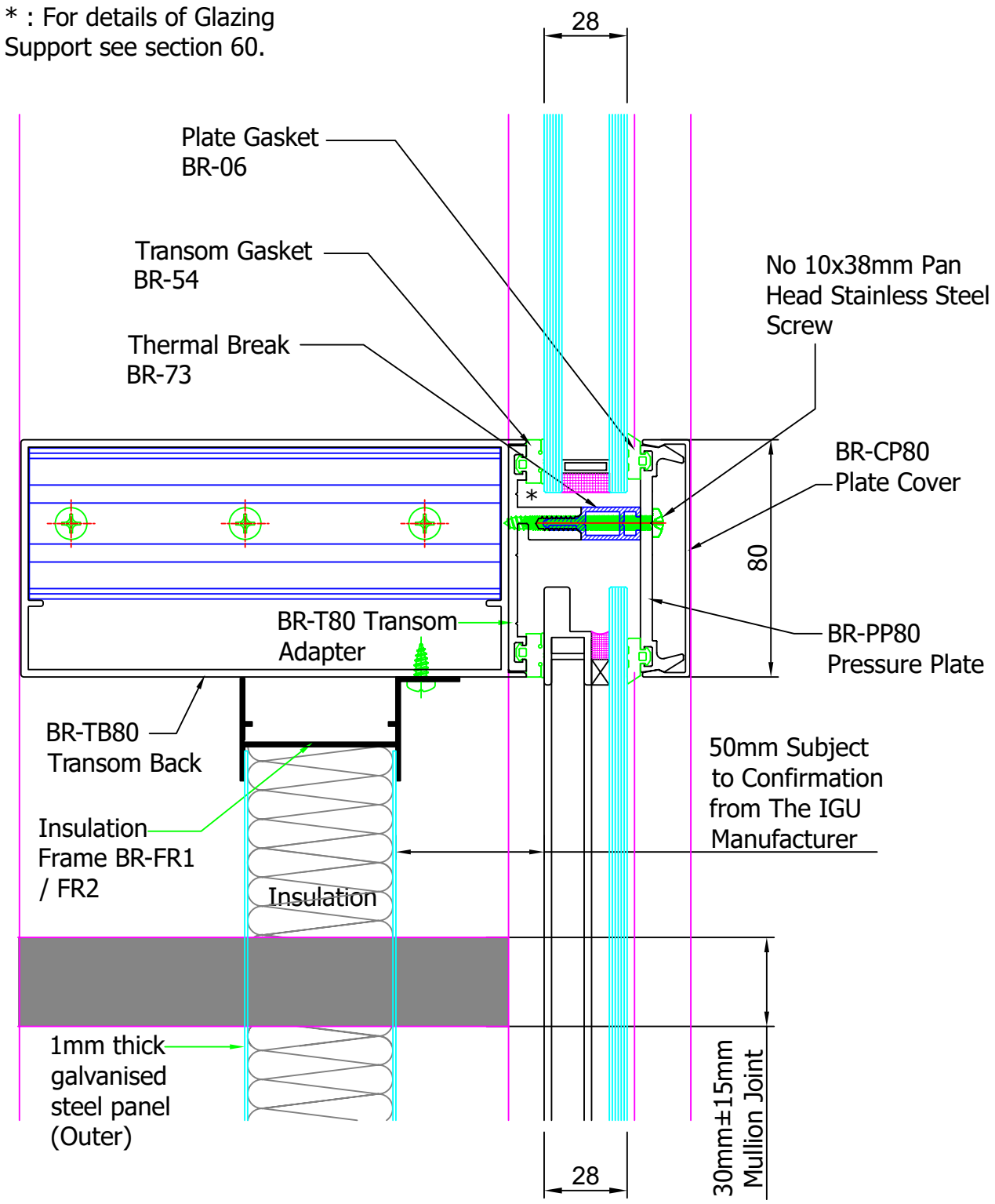

## Section33 - Intermediate Two Part Transom Details

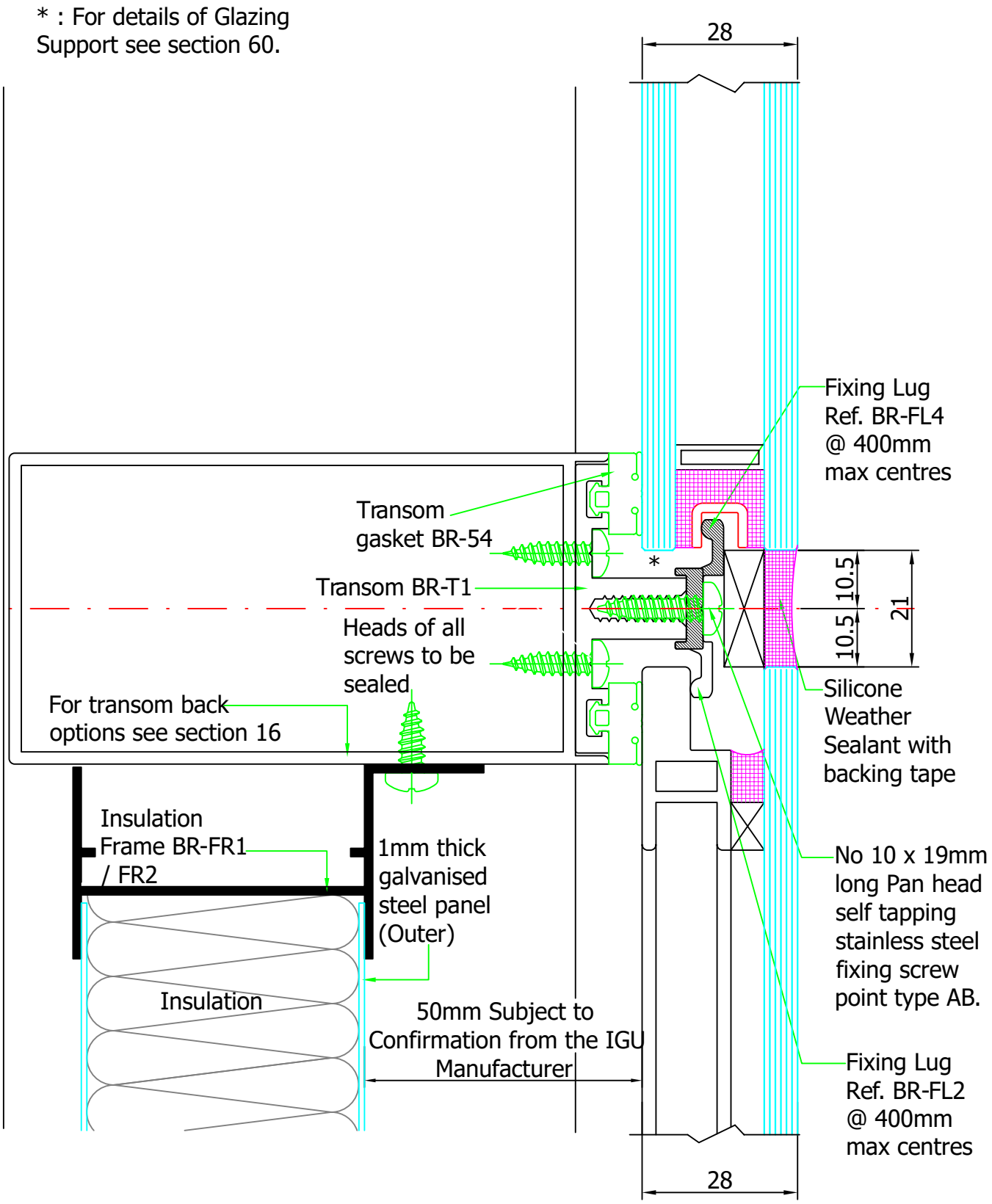

## Section33 - Intermediate Two Part Transom Details

Where movement of more than +/- 2mm is required at expansion joints use this expansion joint detail.

* : For details of Glazing Support see section 60.

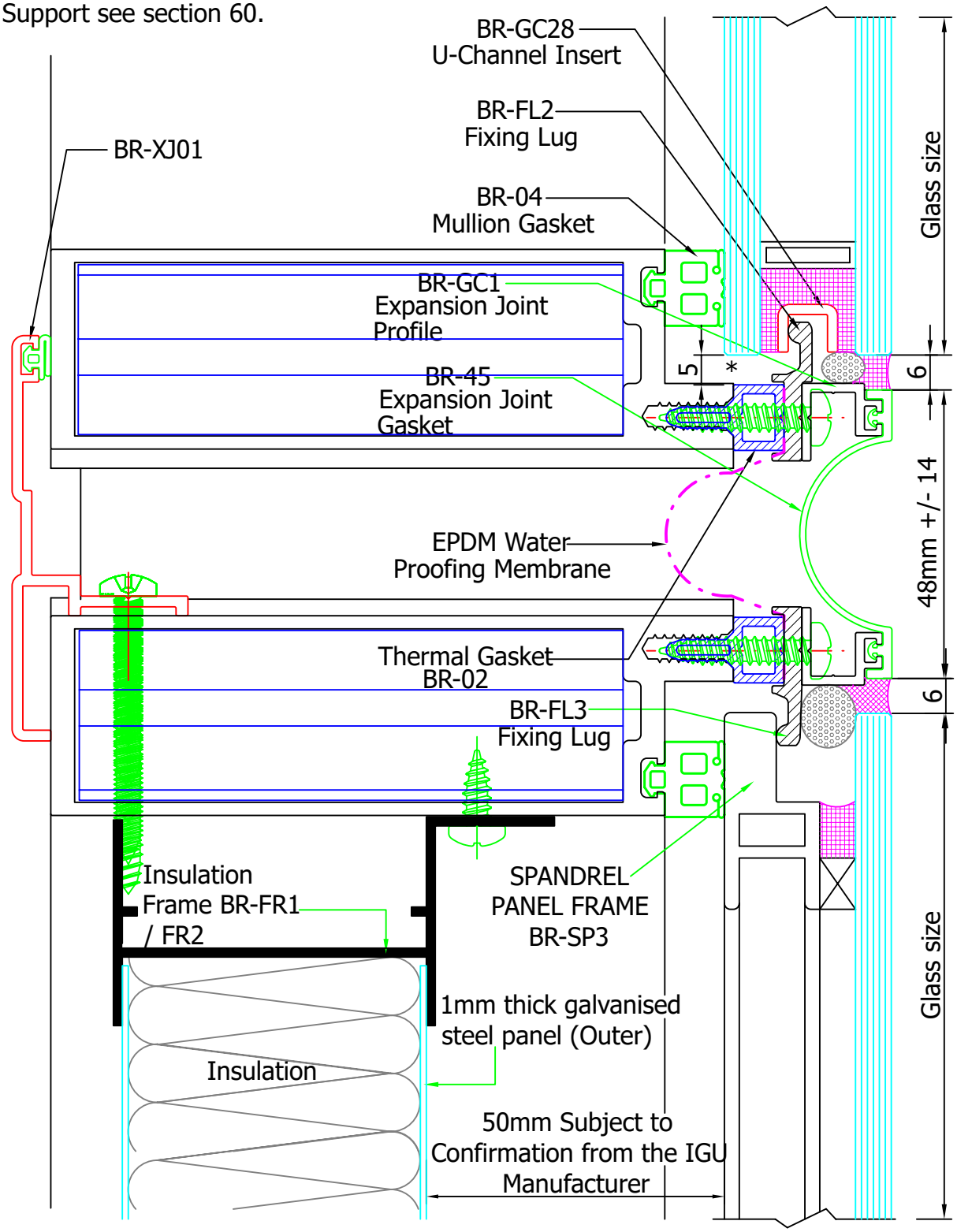

## Section33 - Intermediate Two Part Transom Details

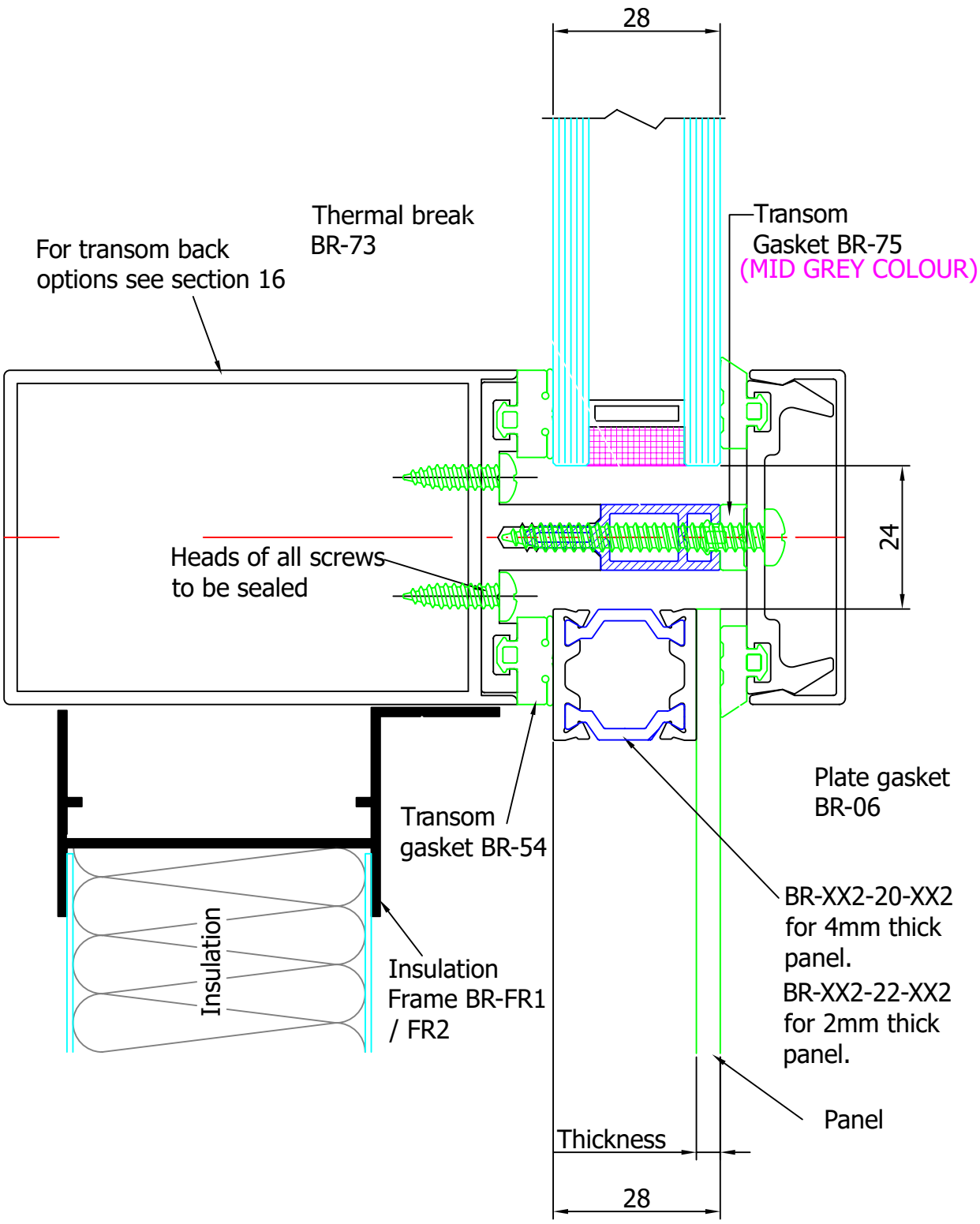

## Section33 - Intermediate Two Part Transom Details

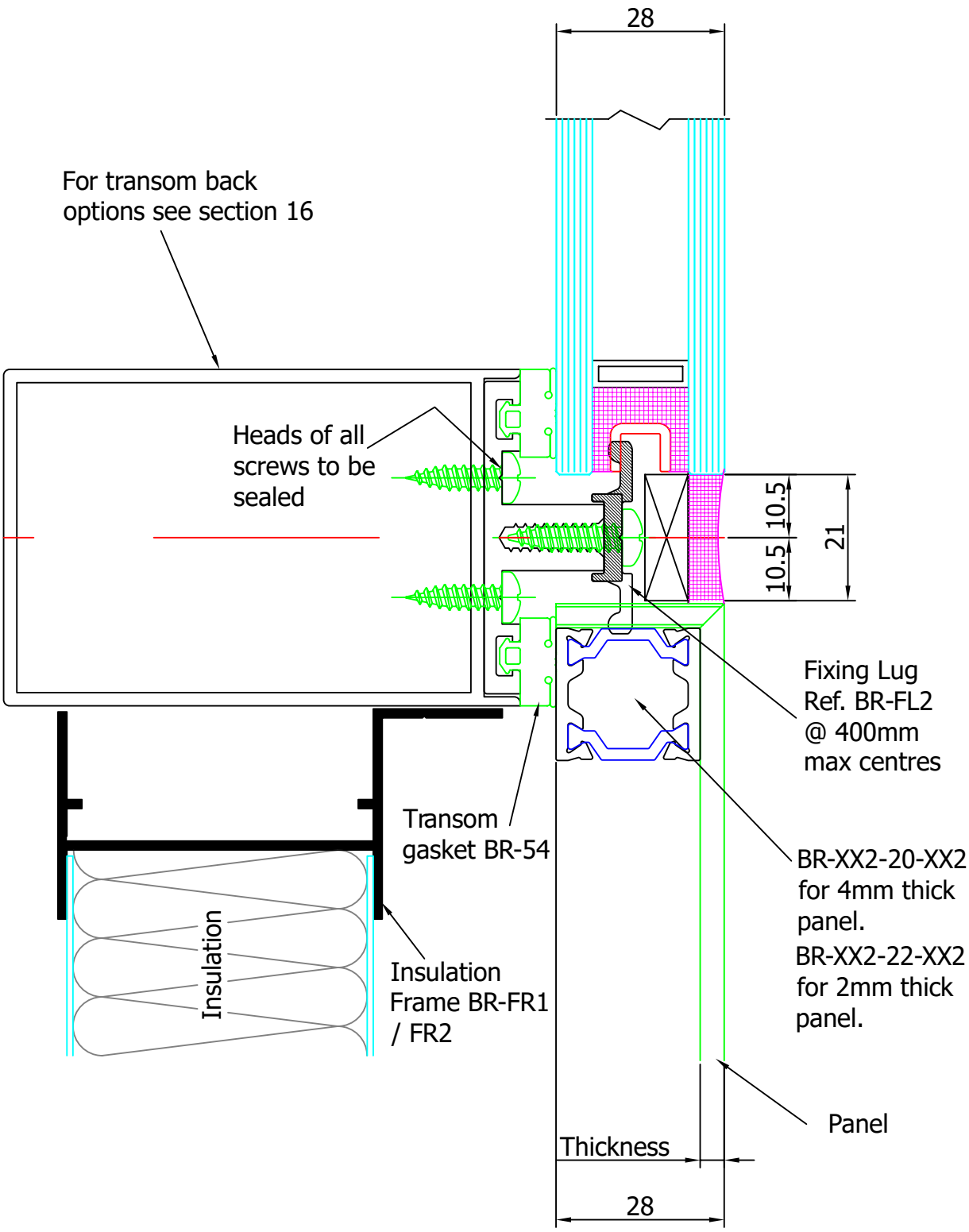

## Section33 - Intermediate Two Part Transom Details

* : For details of Glazing Support see section 60.

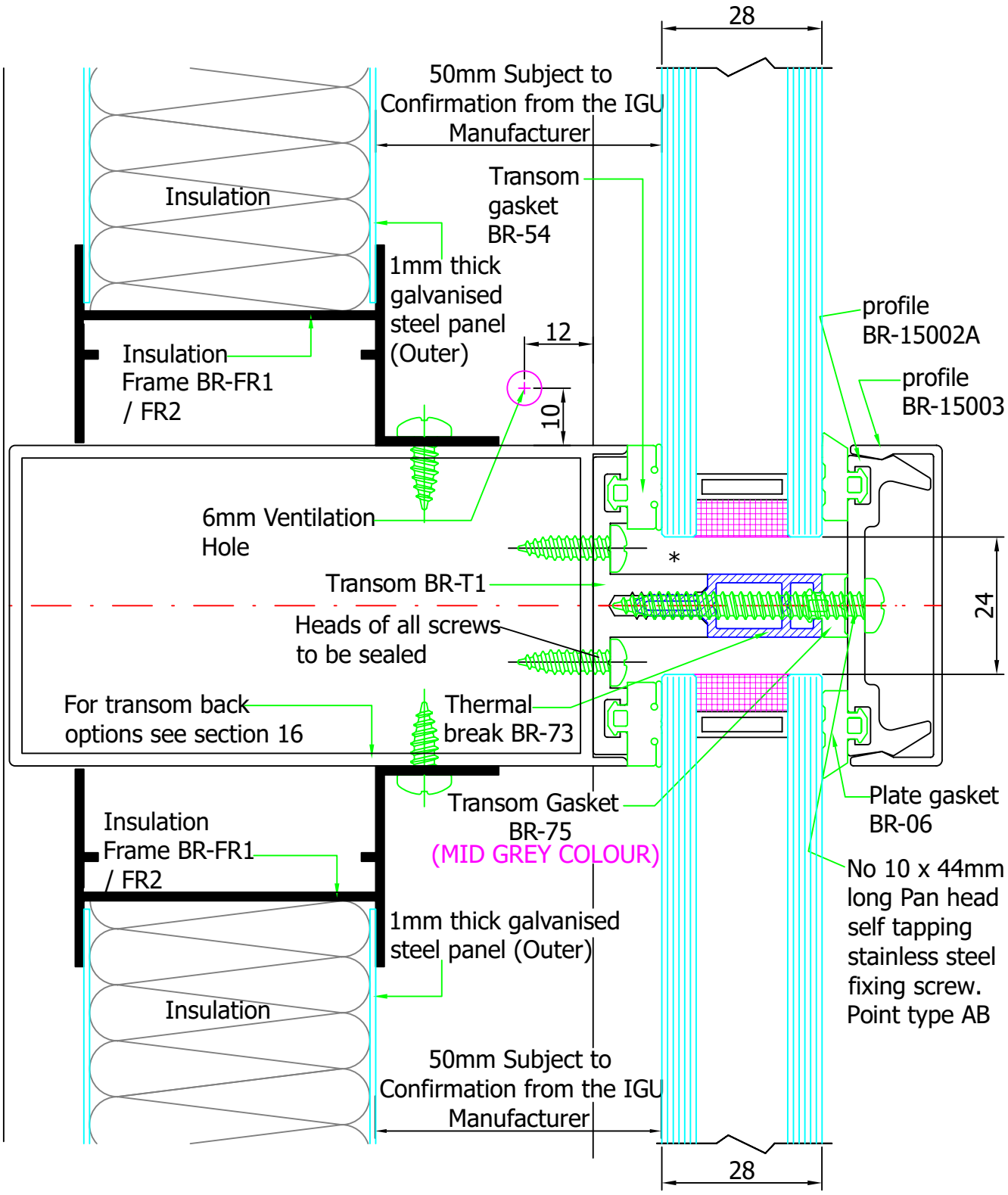

BRITAL

ALUMINIUM SYSTEMS DESIGN

## Section33 - Intermediate Two Part Transom Details

* : For details of Glazing Support see section 60.

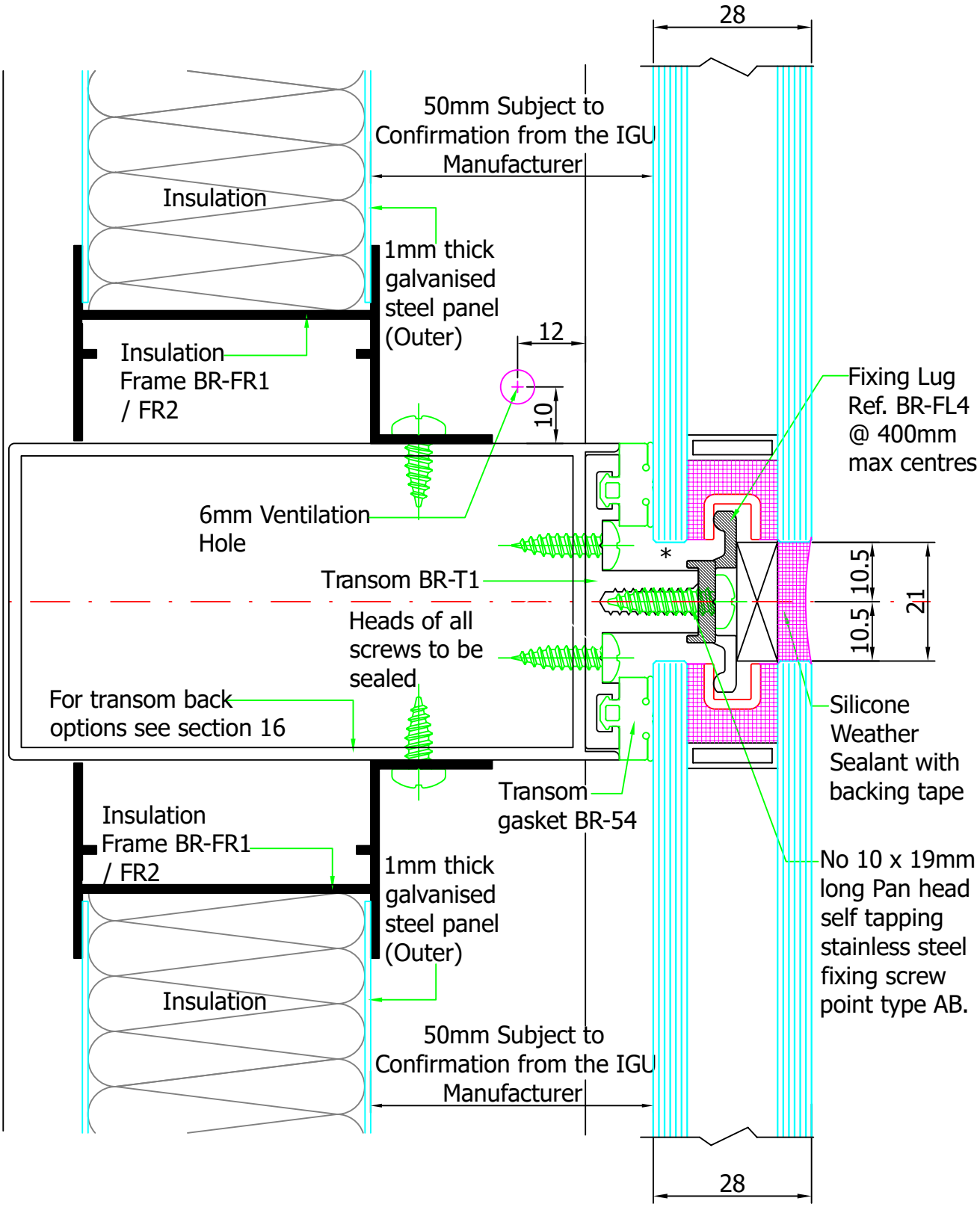

## Section33 - Intermediate Two Part Transom Details

* : For details of Glazing Support see section 60.

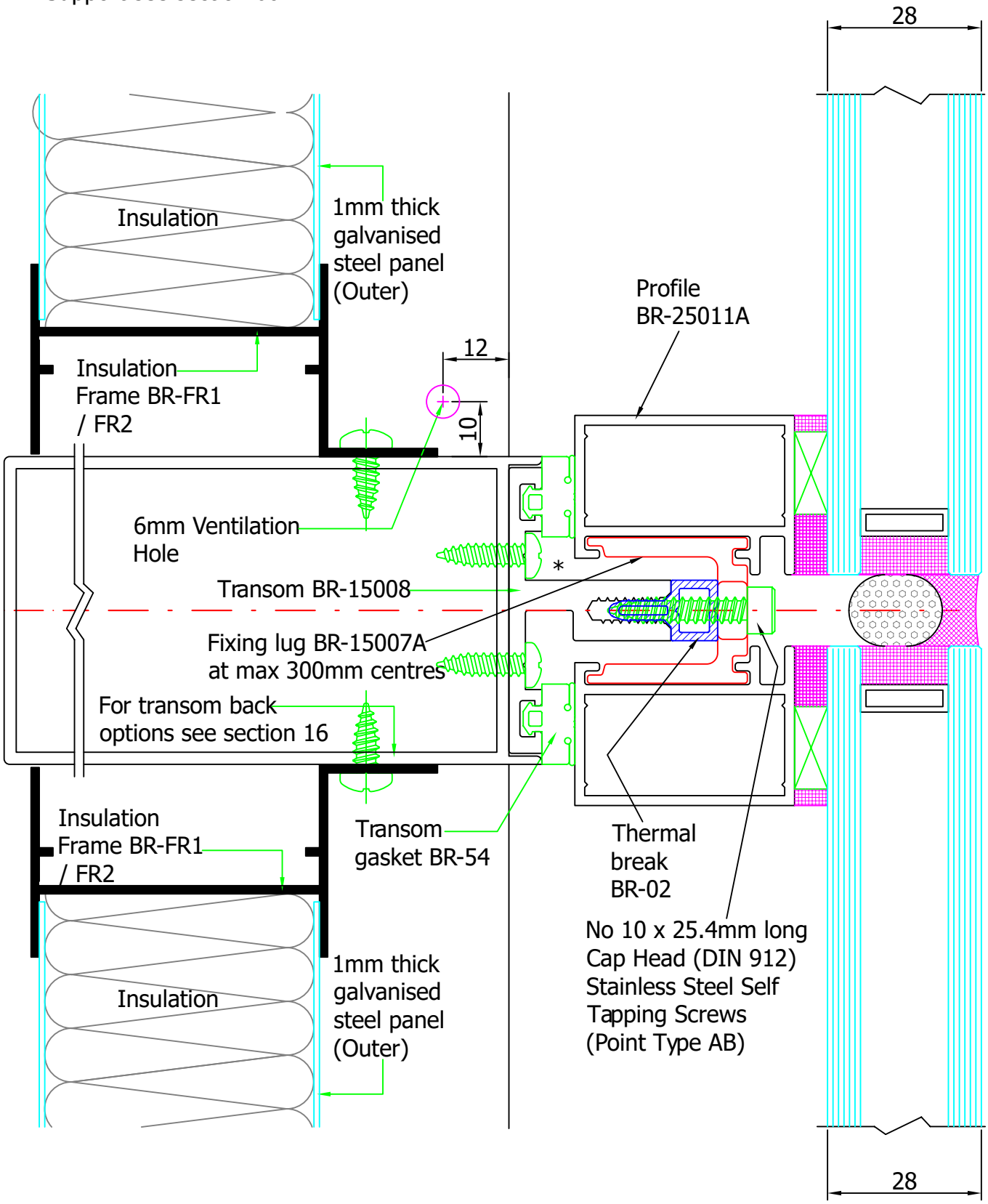

## Section33 - Intermediate Two Part Transom Details

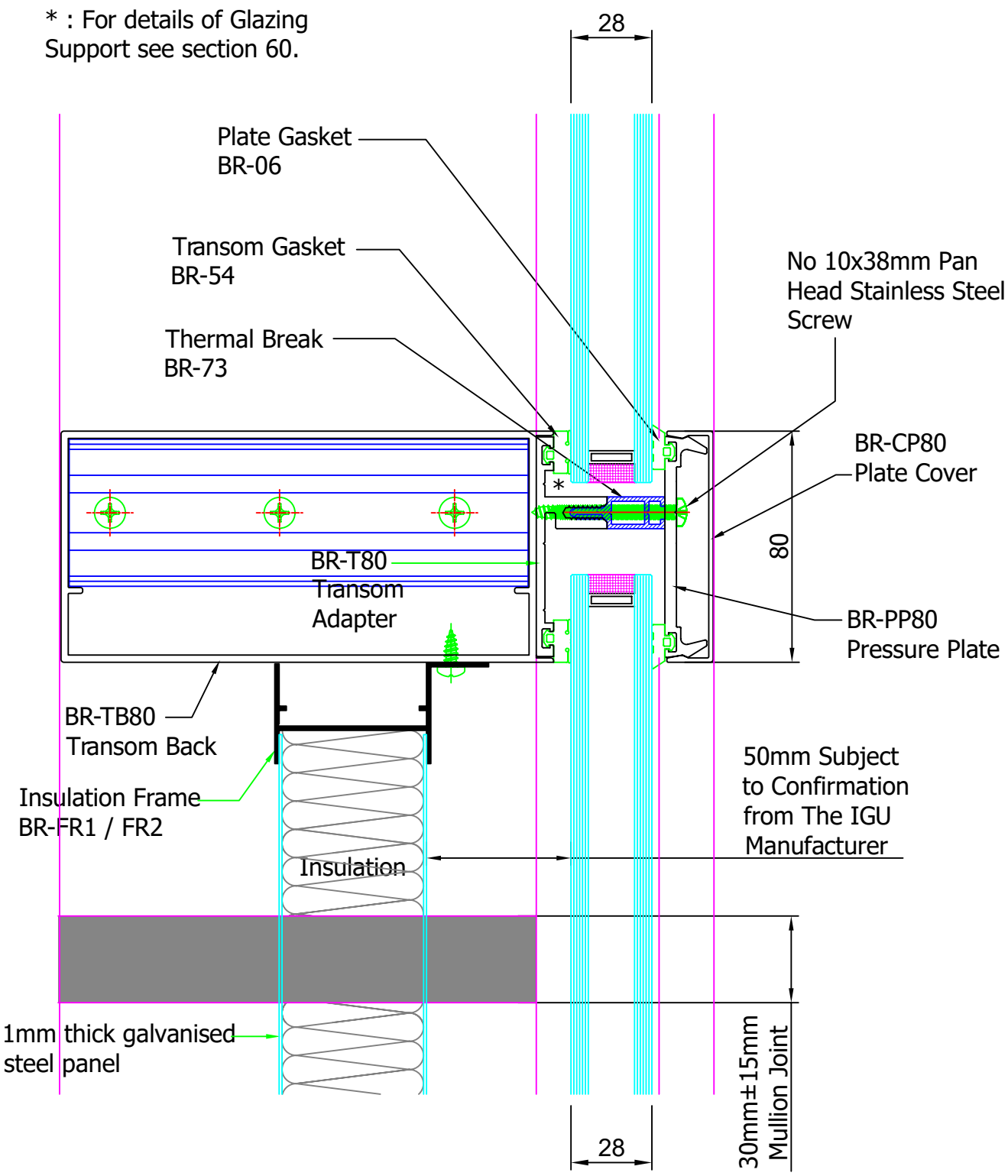

## Section33 - Intermediate Two Part Transom Details

Where movement of more than +/- 2mm is required at expansion joints use this expansion joint detail.

* : For details of Glazing Support see section 60.

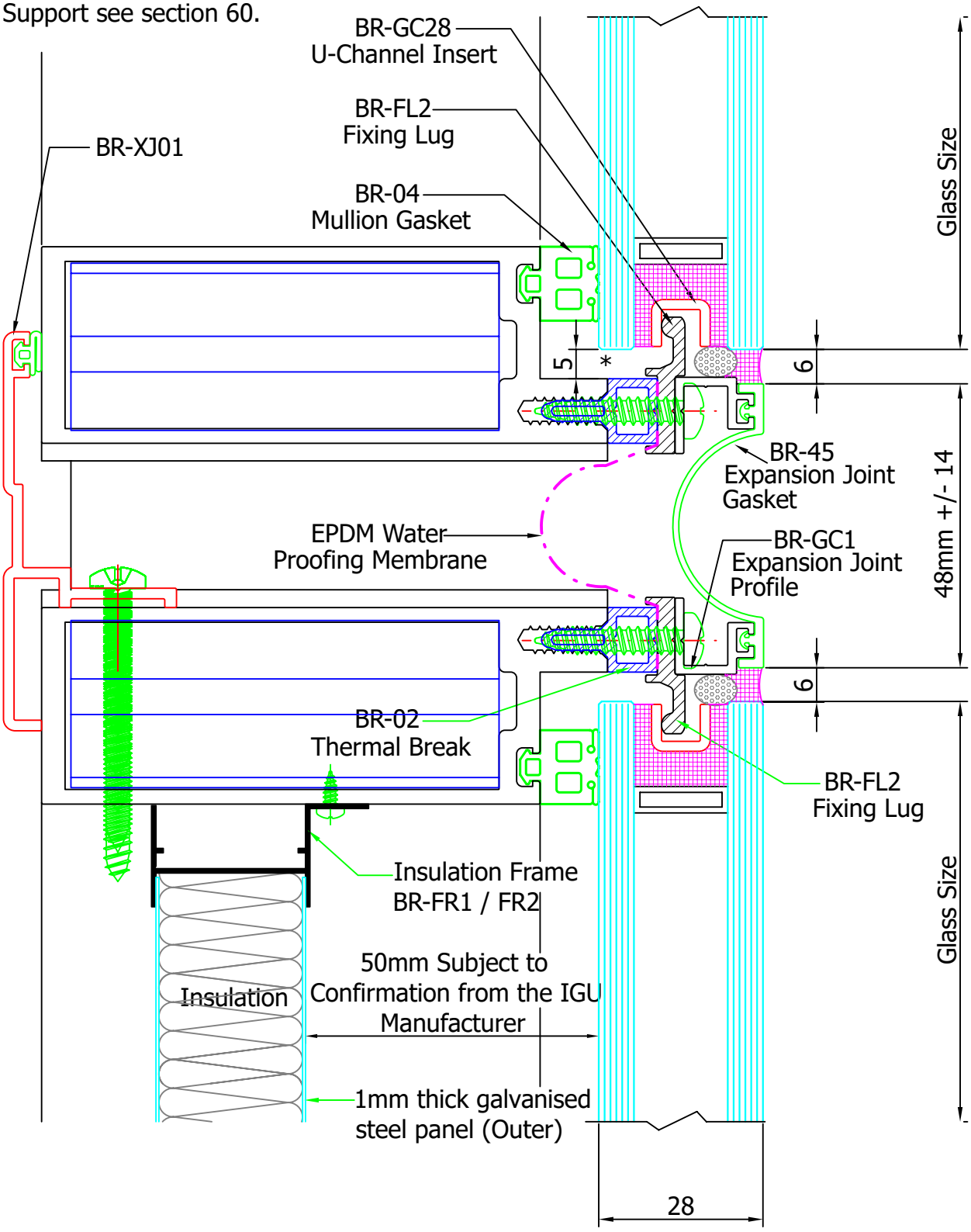

## Section33 - Intermediate Two Part Transom Details

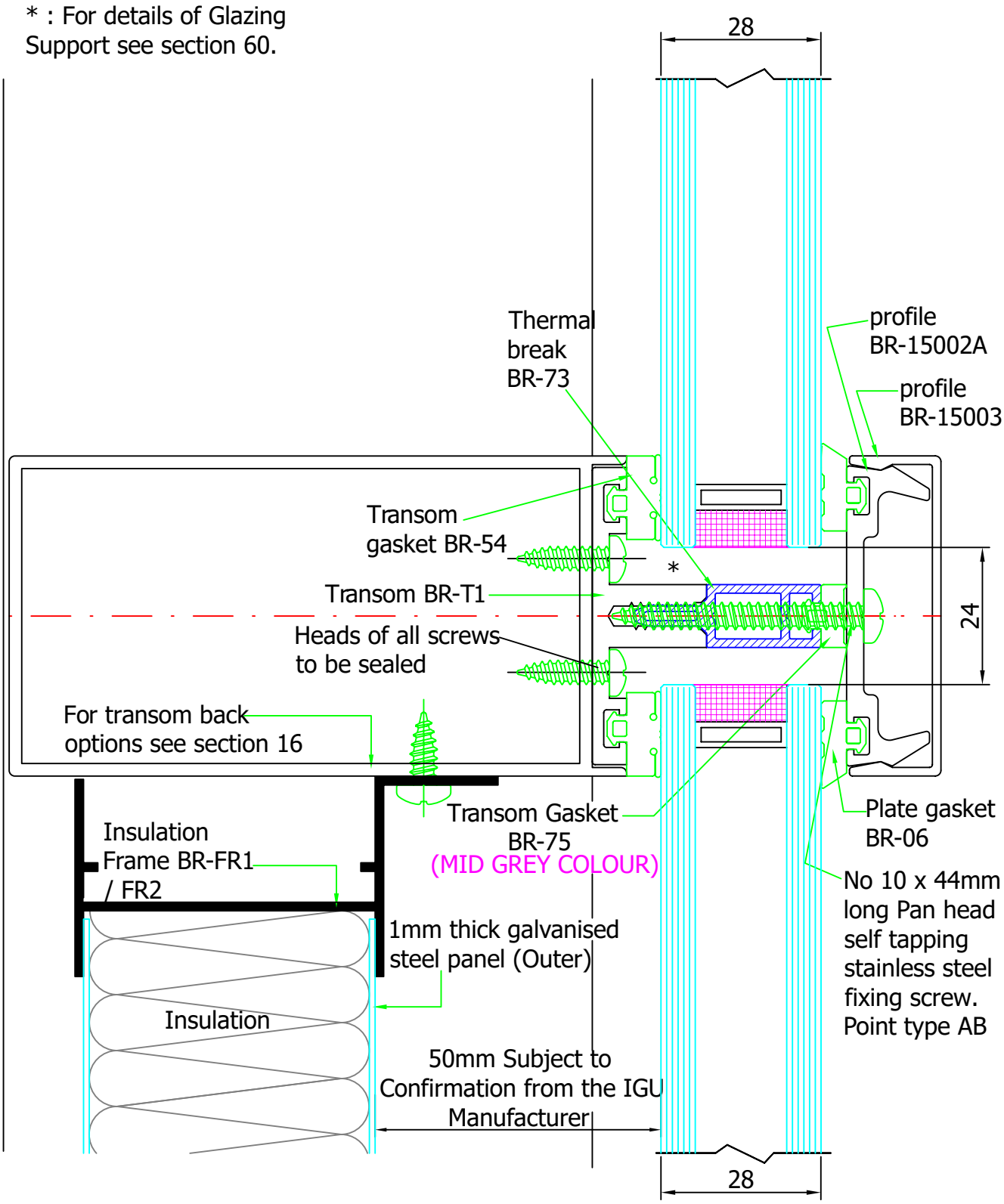

## Section33 - Intermediate Two Part Transom Details

* : For details of Glazing Support see section 60.

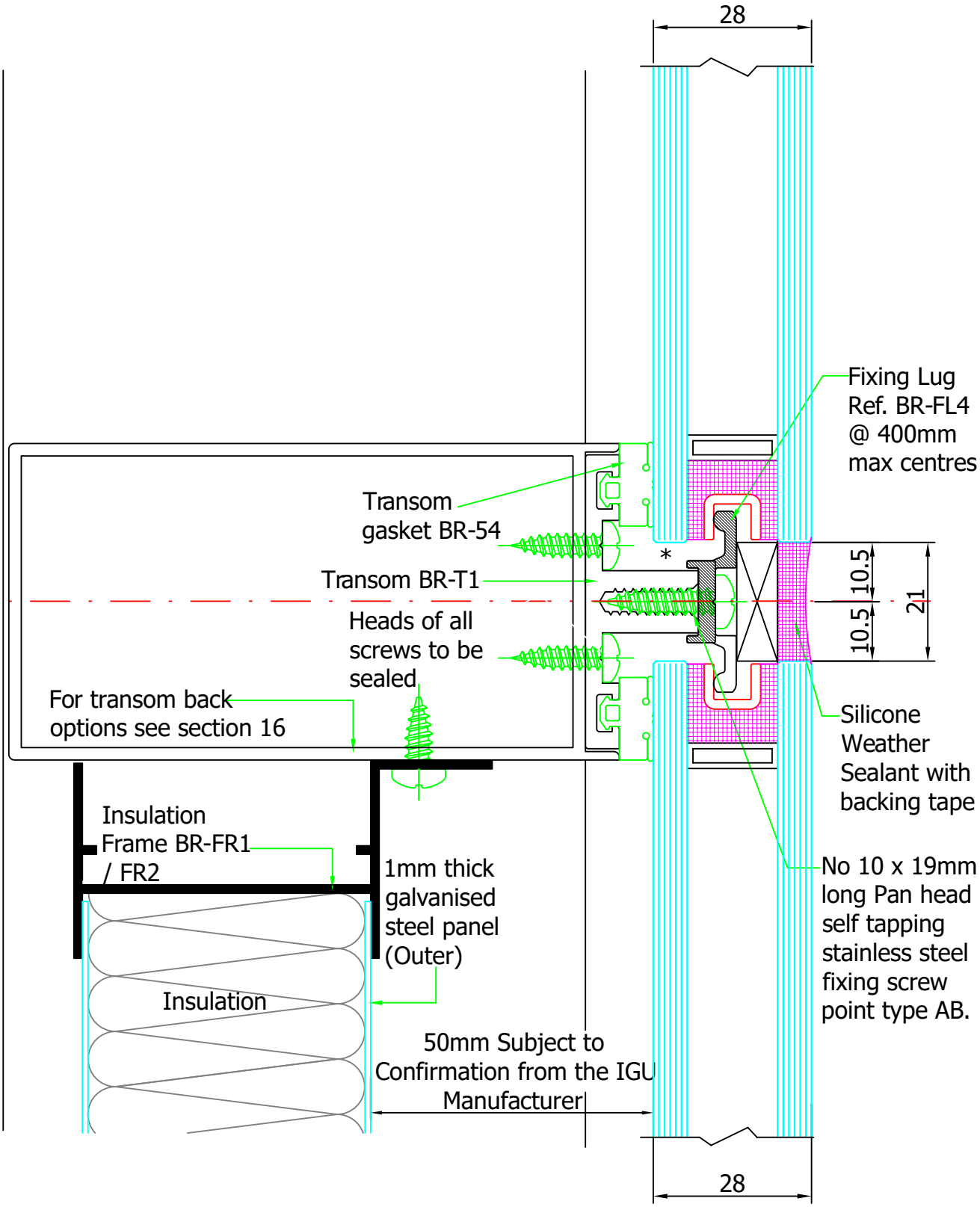

## Section33 - Intermediate Two Part Transom Details

* : For details of Glazing Support see section 60.

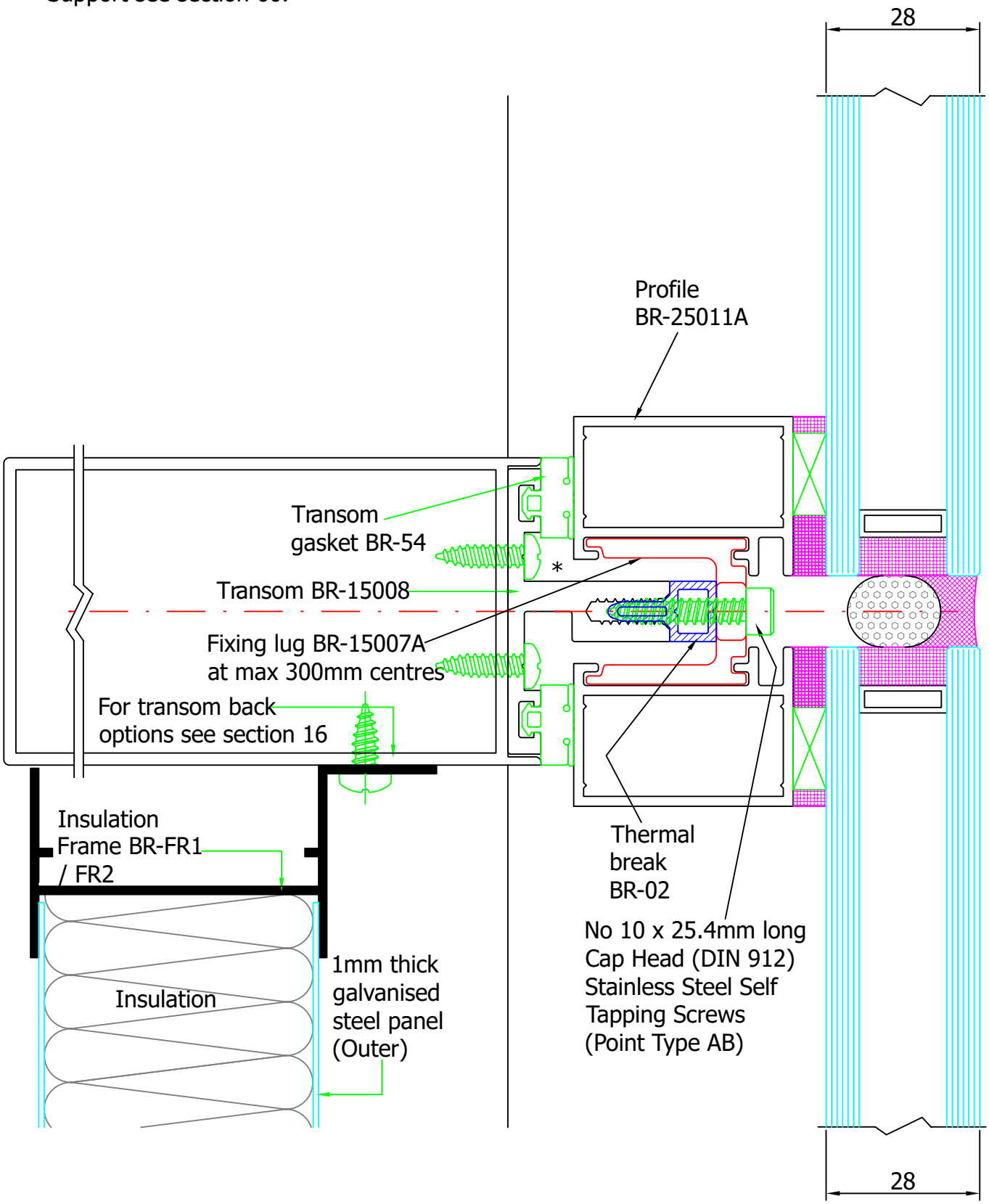

## Section34 - Jamb Details

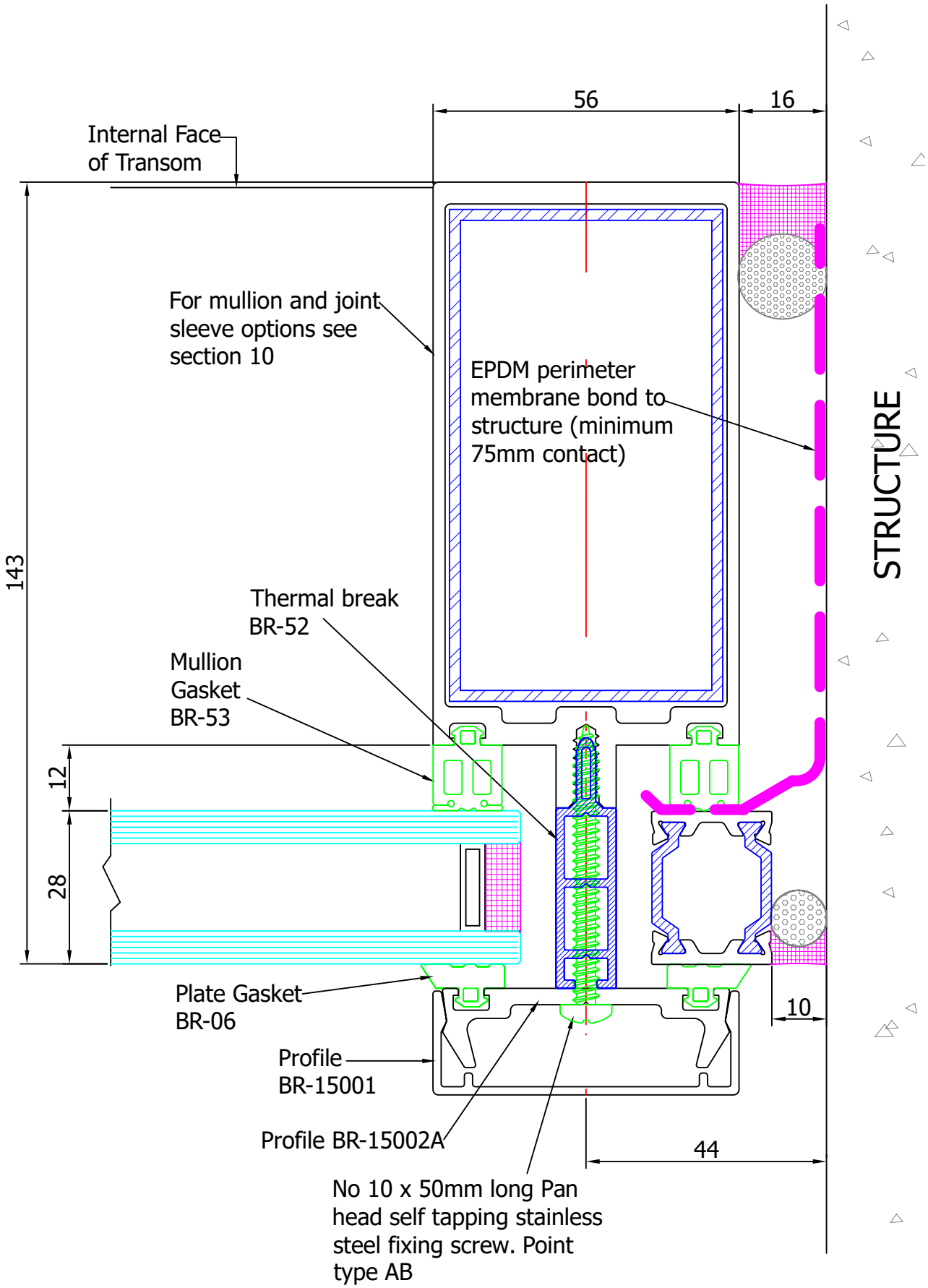

## Section34 - Jamb Details

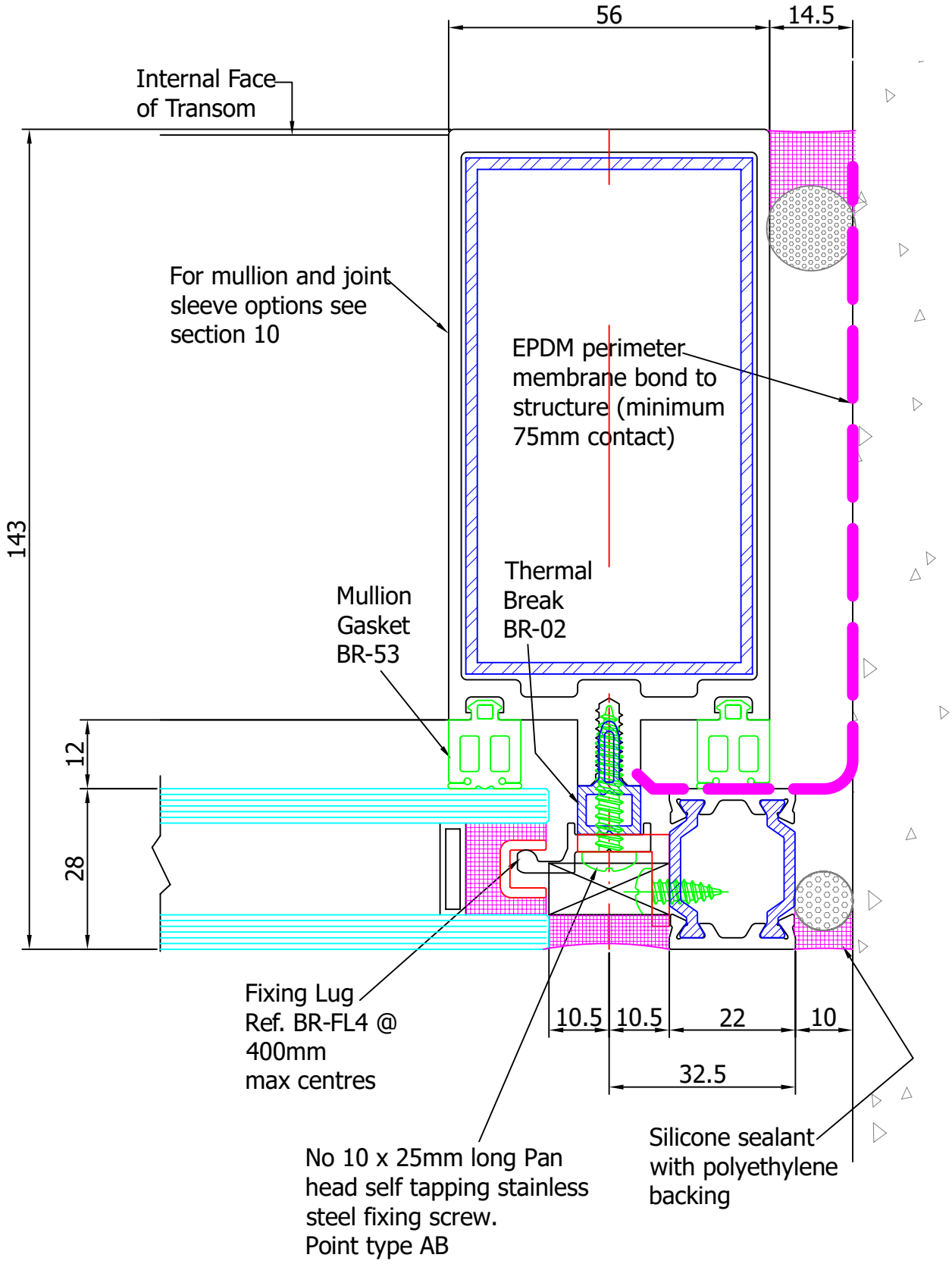

## Section34 - Jamb Details

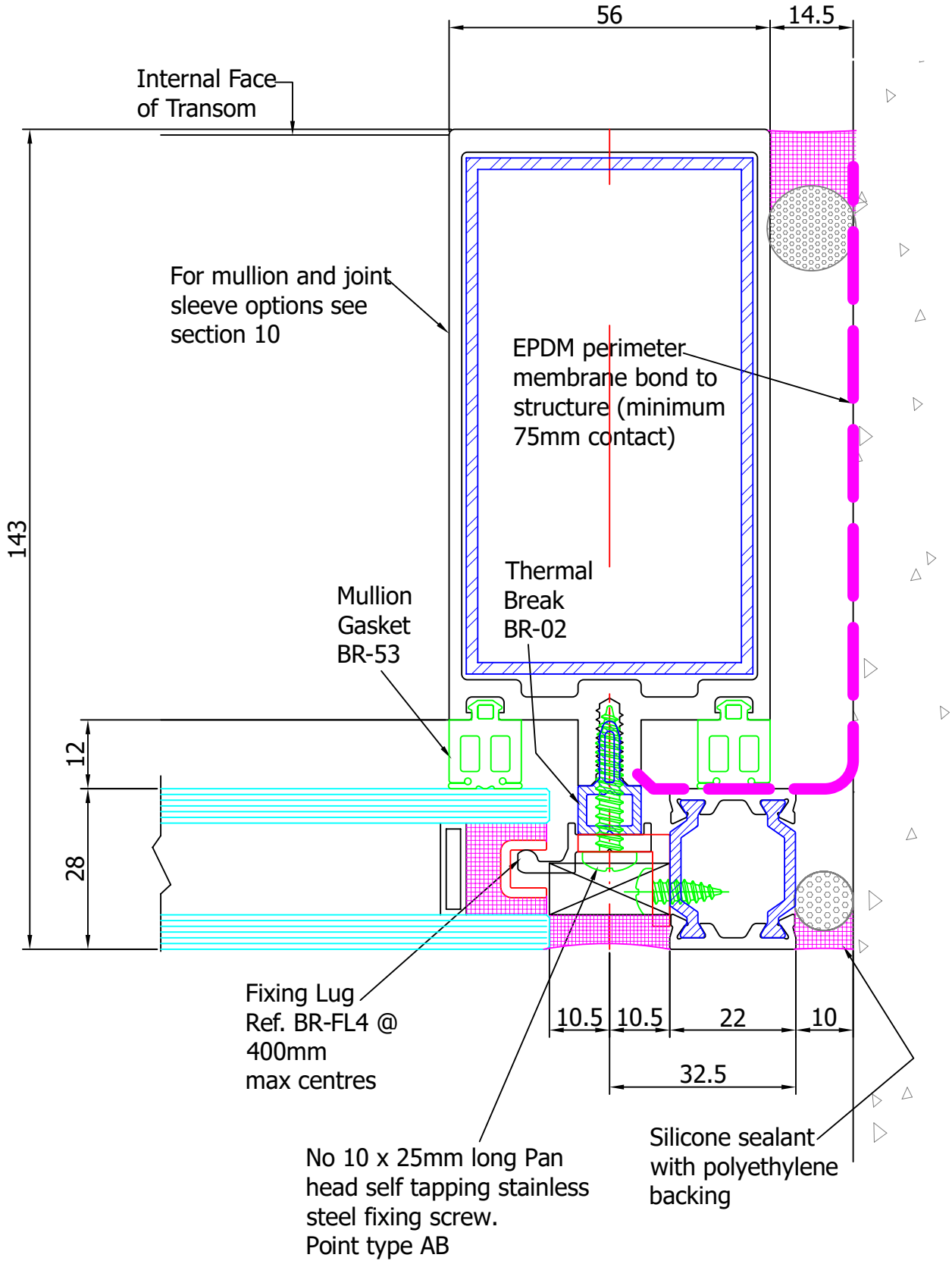

## Section34 - Jamb Details

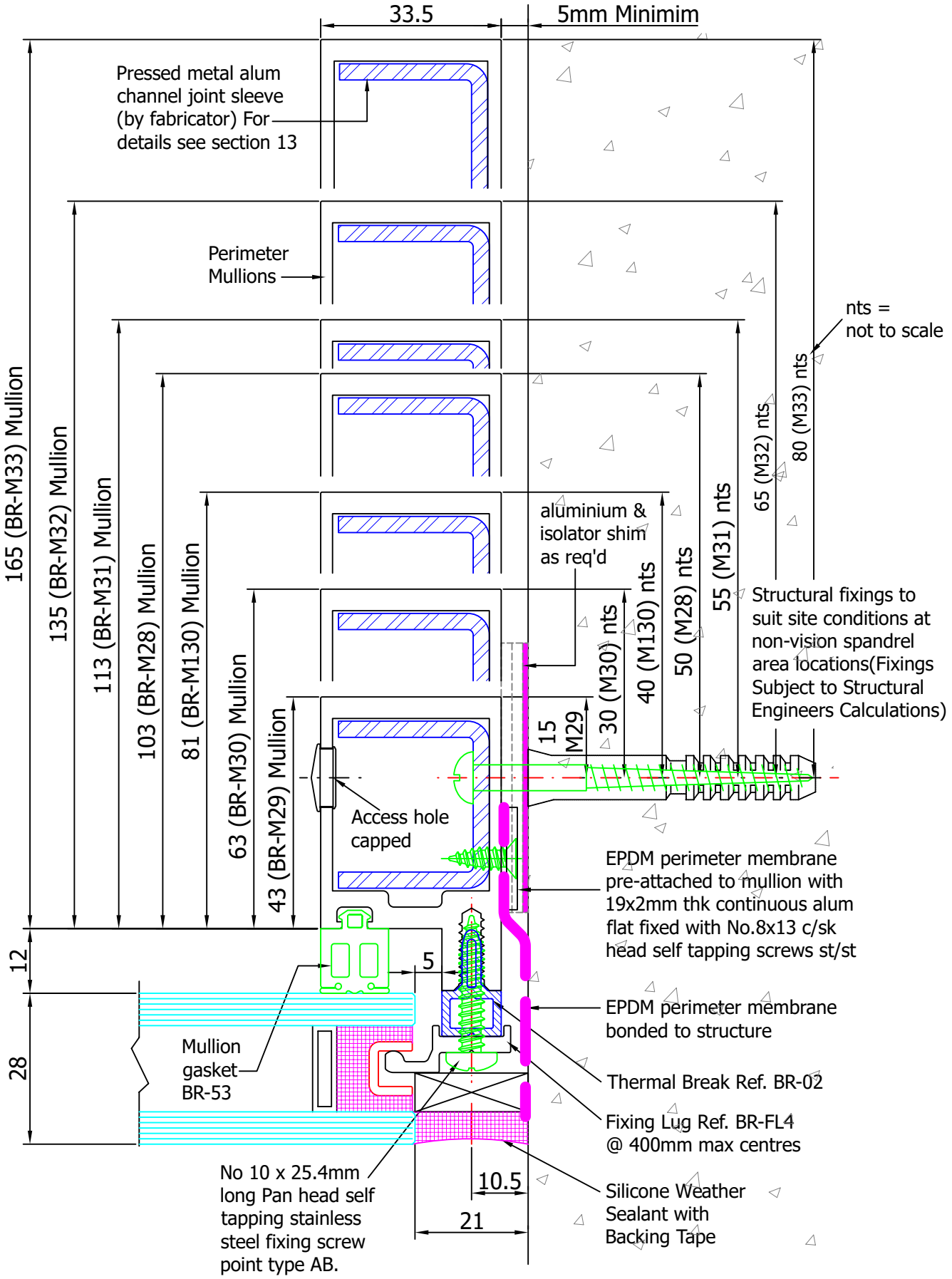

## Section35 - Cill Details

* : For details of Glazing Support See Section 60

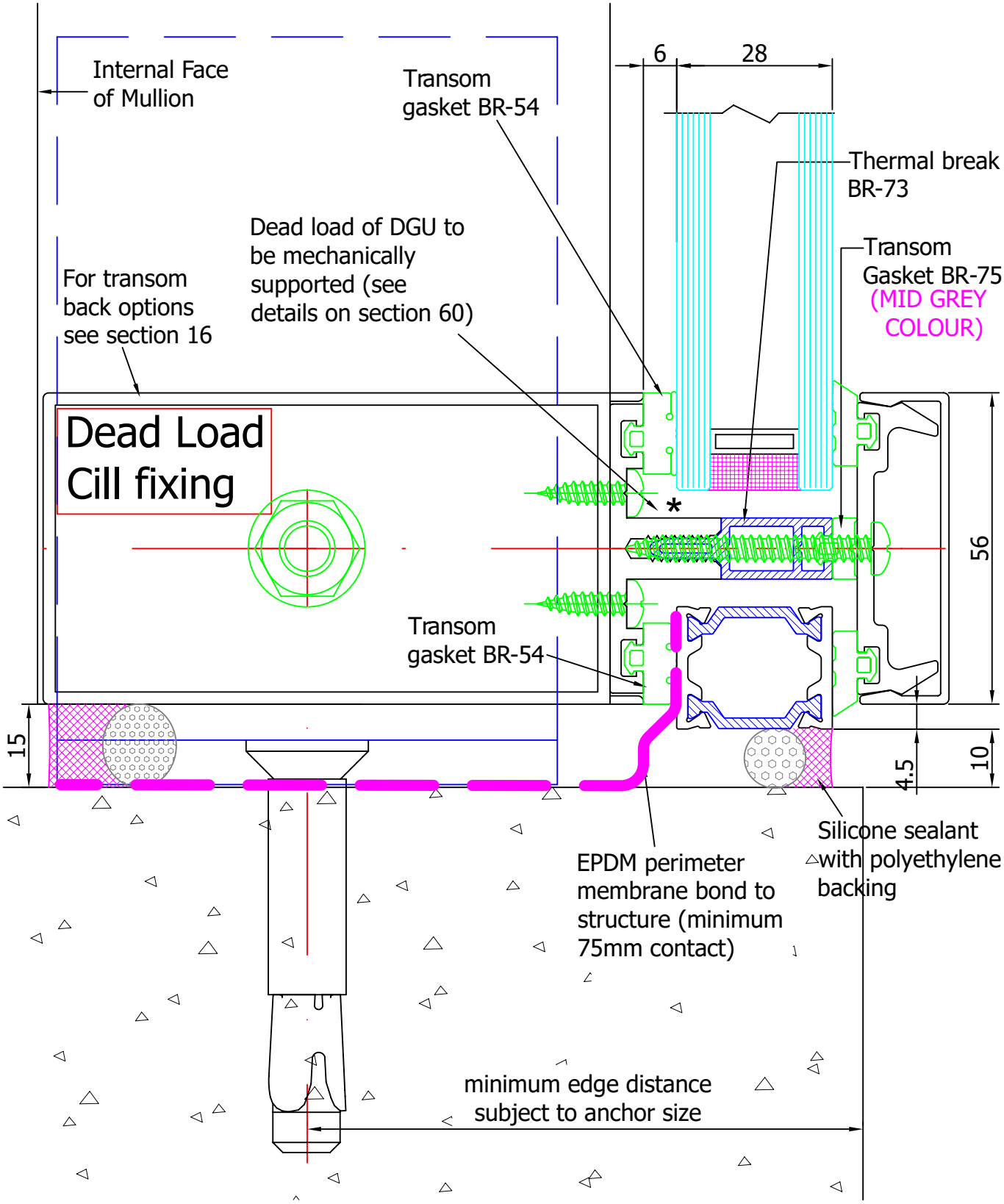

## Section35 - Cill Details

* : For details of Glazing Support See Section 60

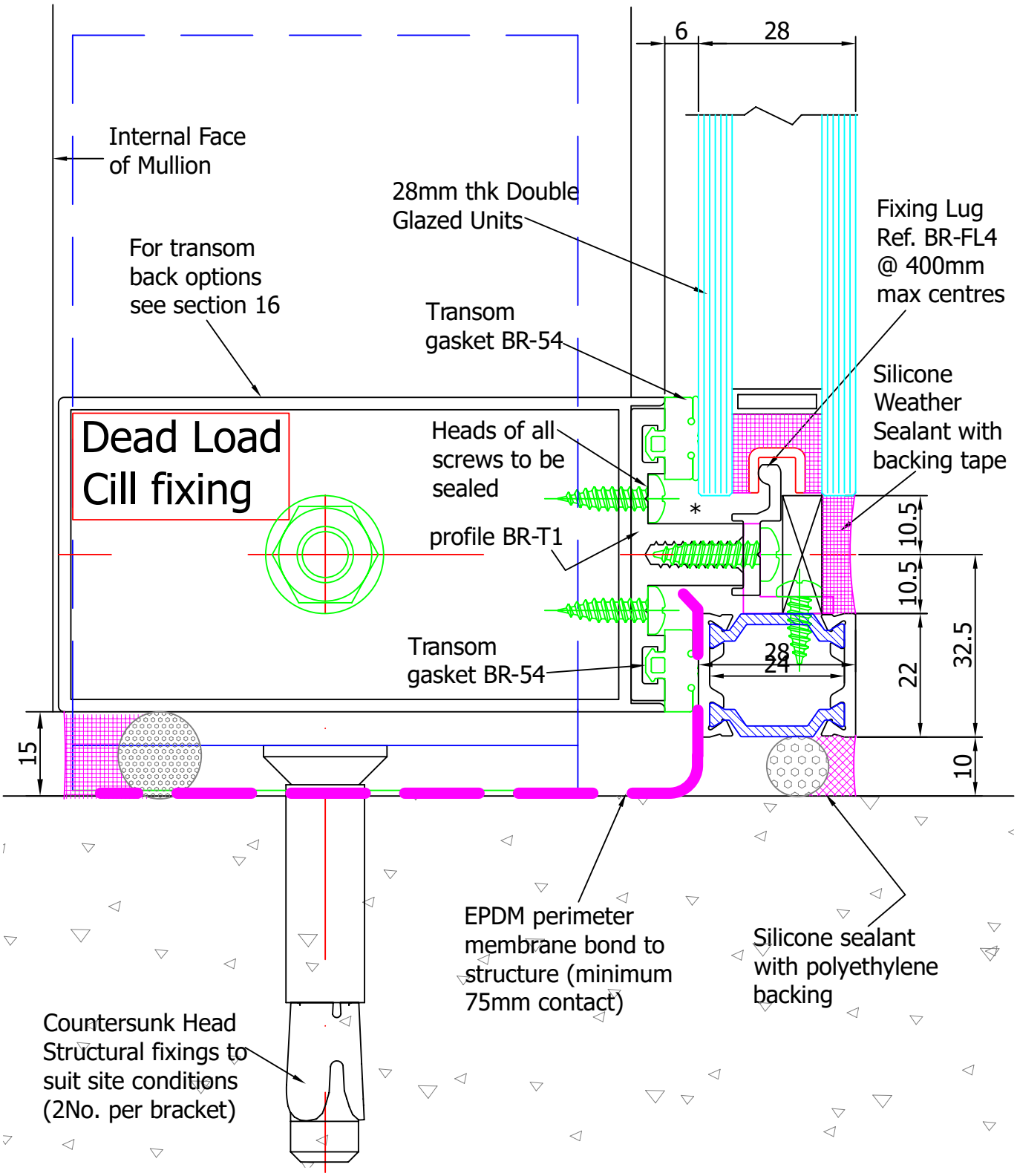

## Section35 - Cill Details

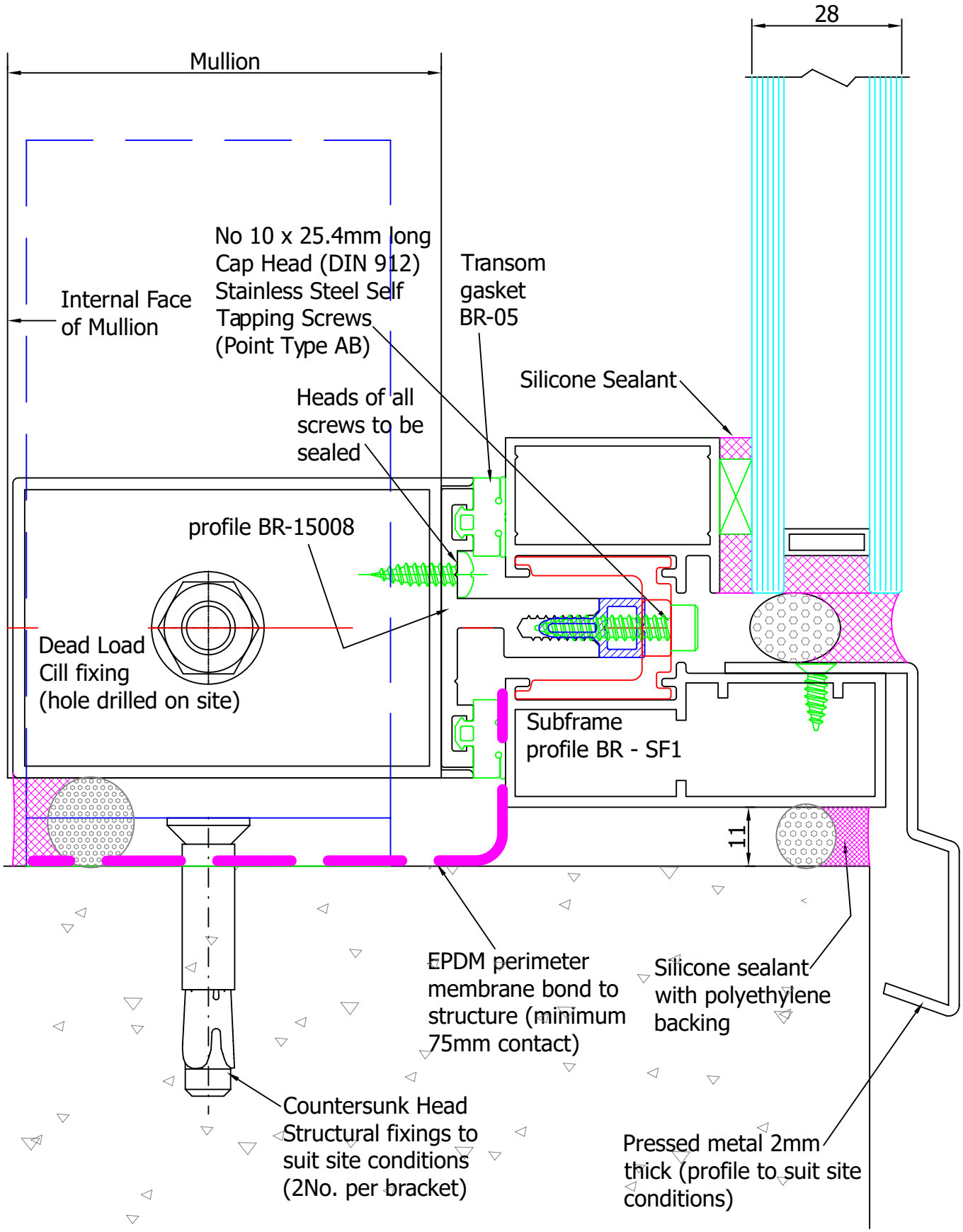

## Section35 - Cill Details

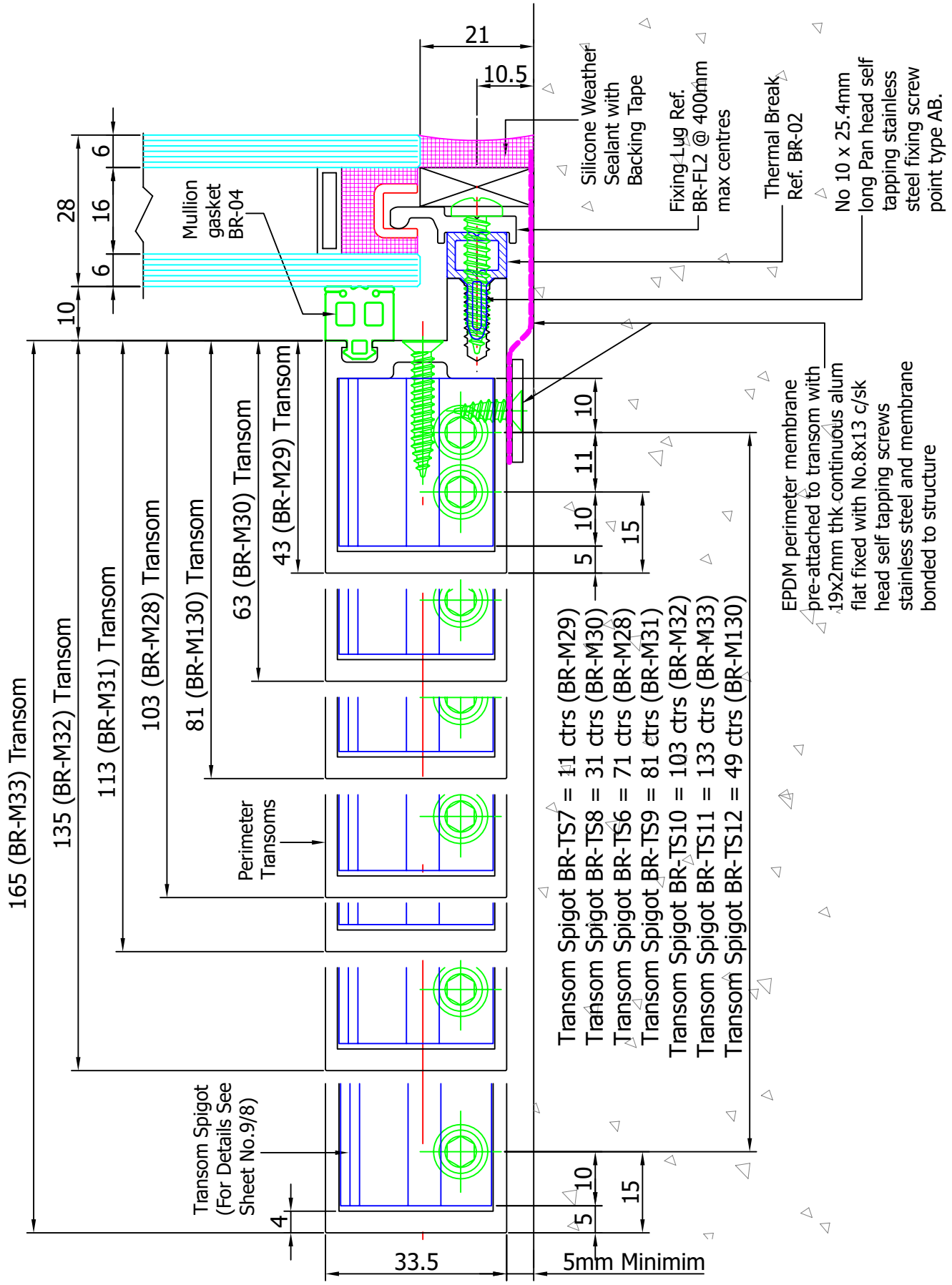

## Section36 - Head Details

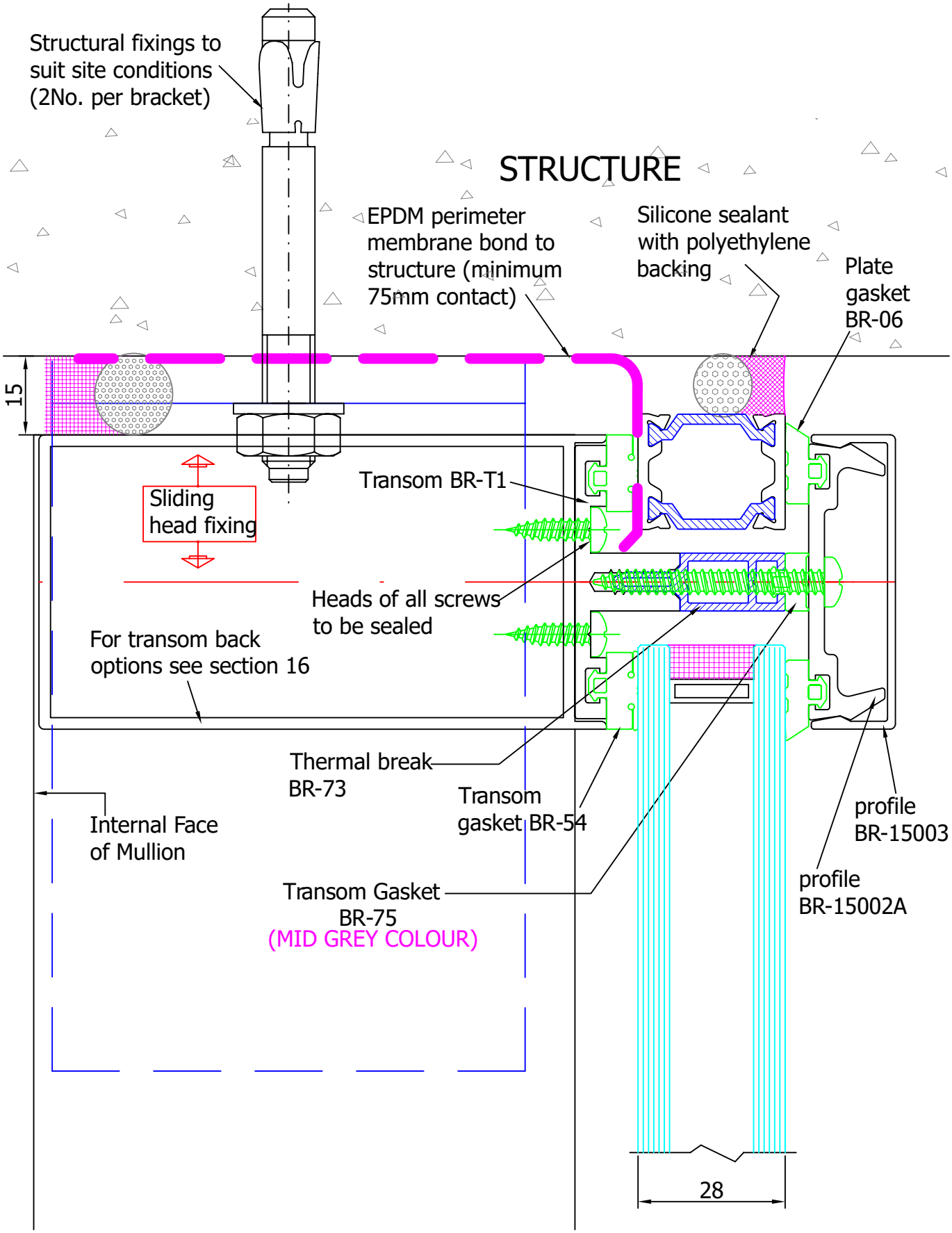

## Section36 - Head Details

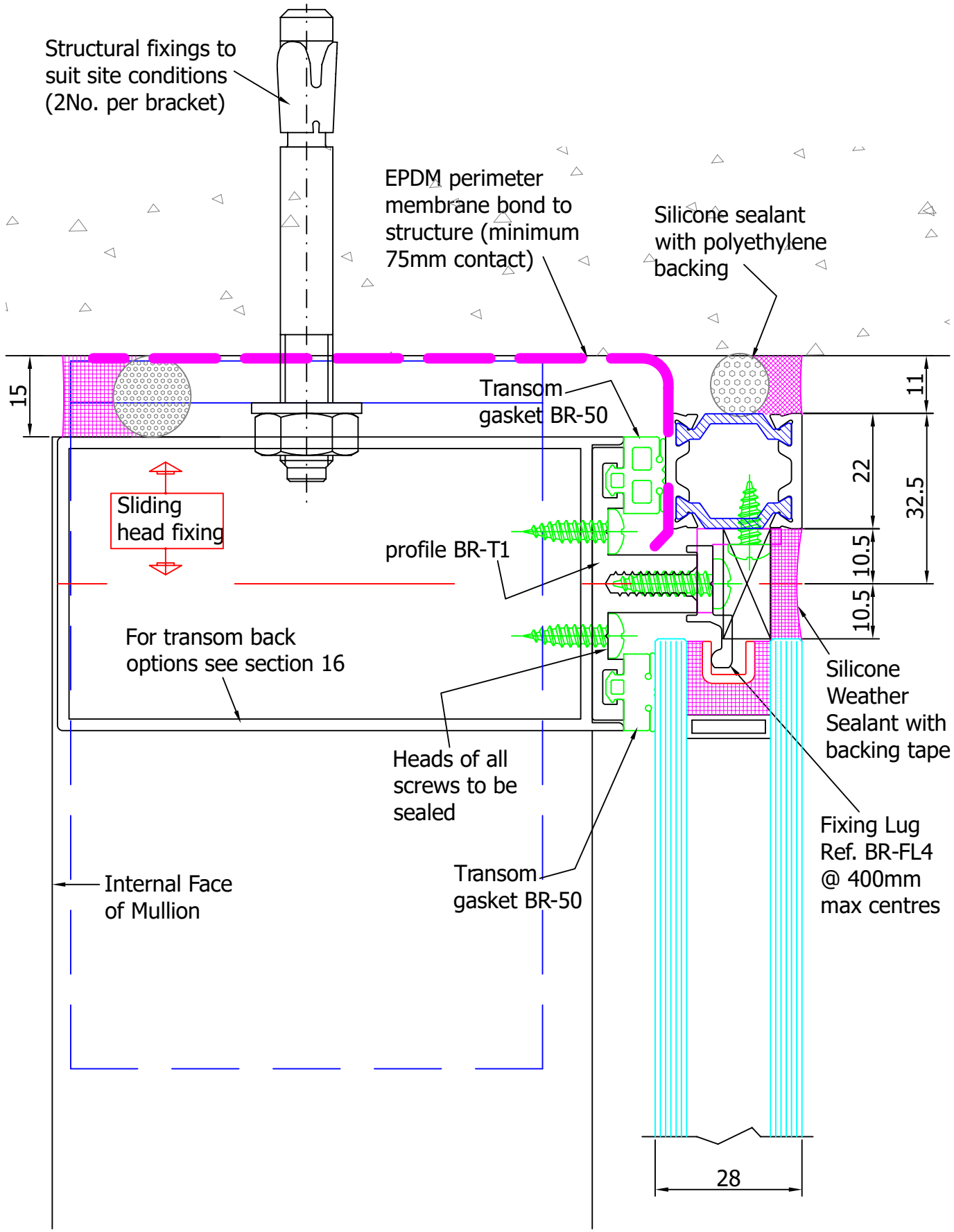

## Section36 - Head Details

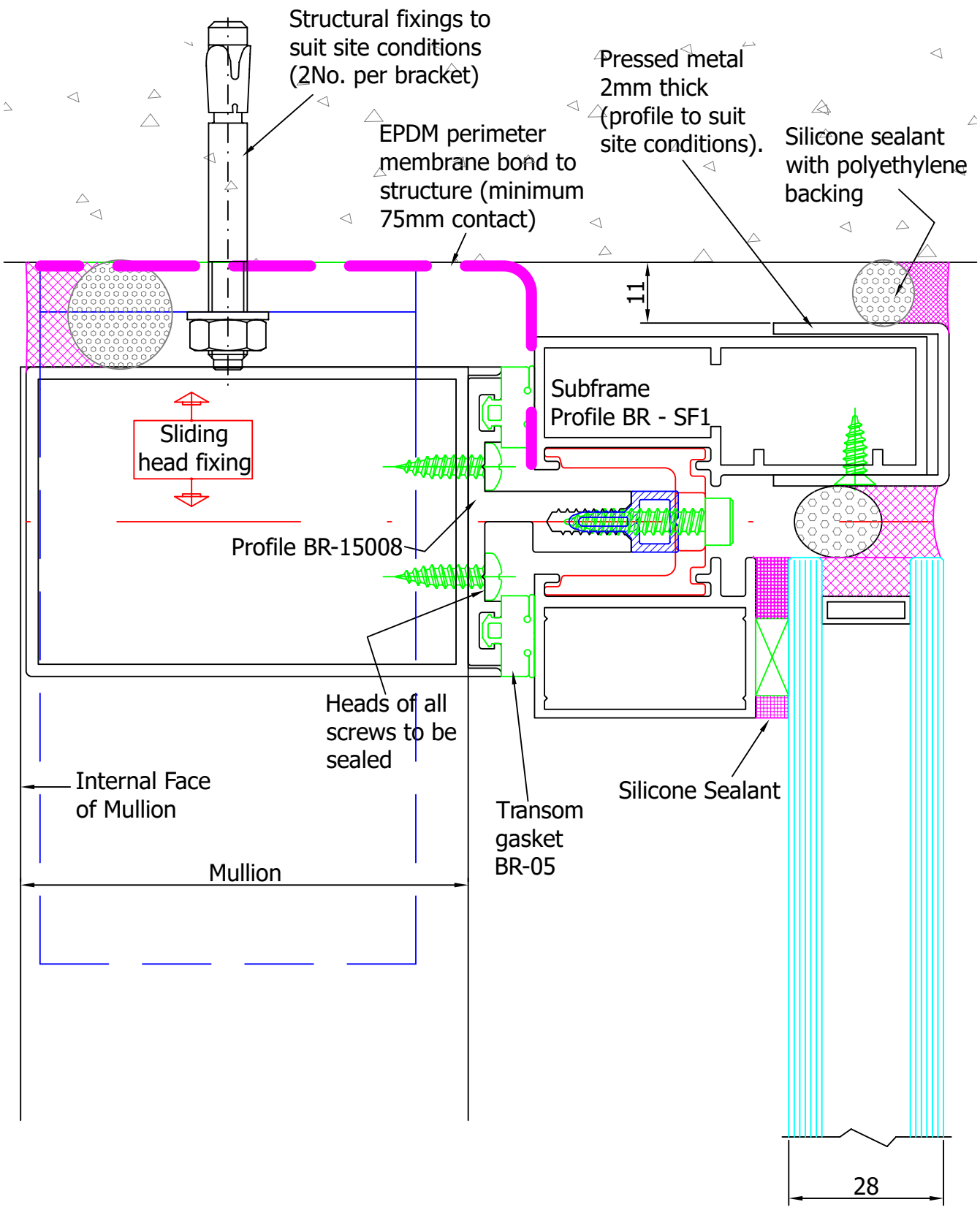

## Section37 - Fixing Details Including Joint Spigot

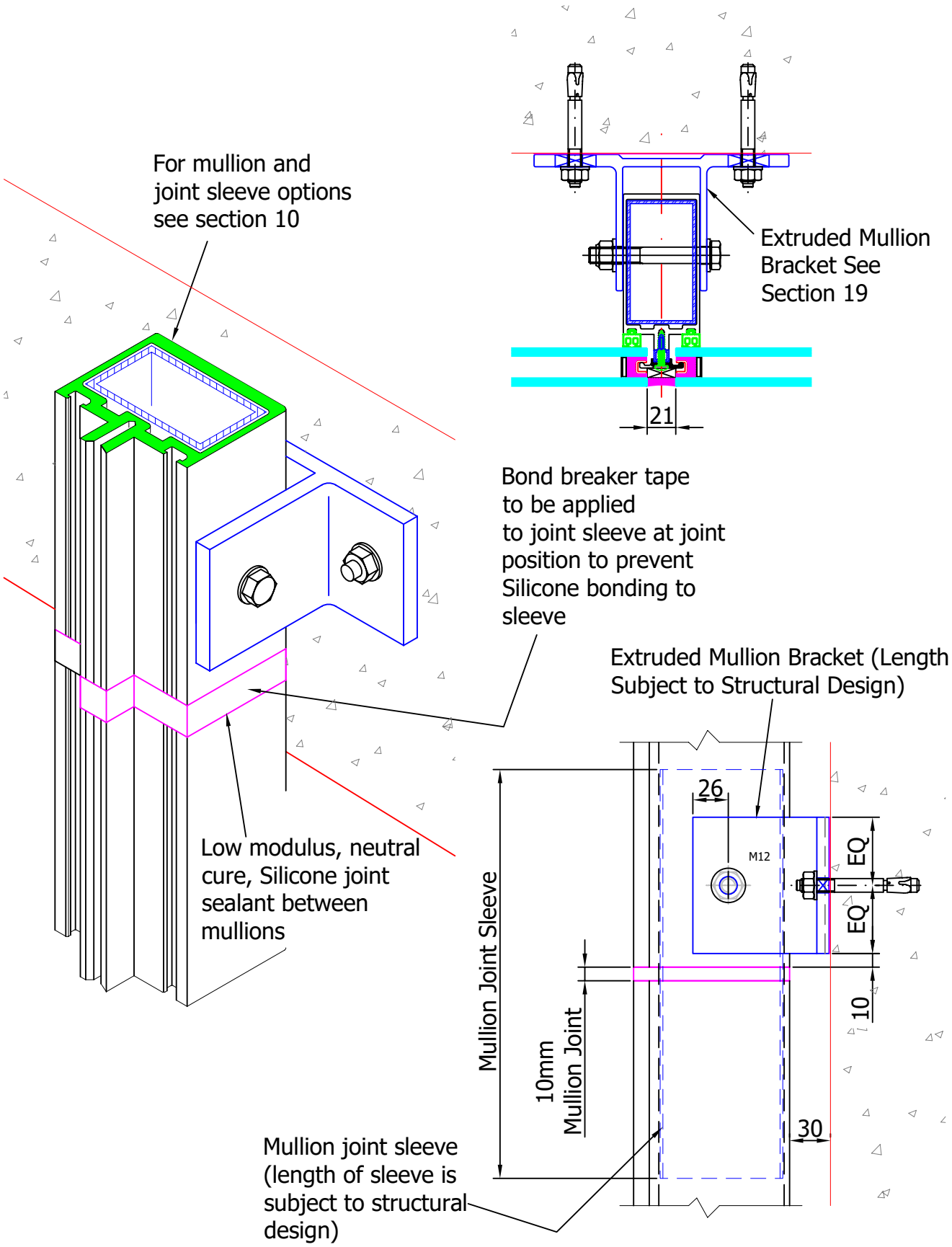

## Section37 - Fixing Details Including Joint Spigot

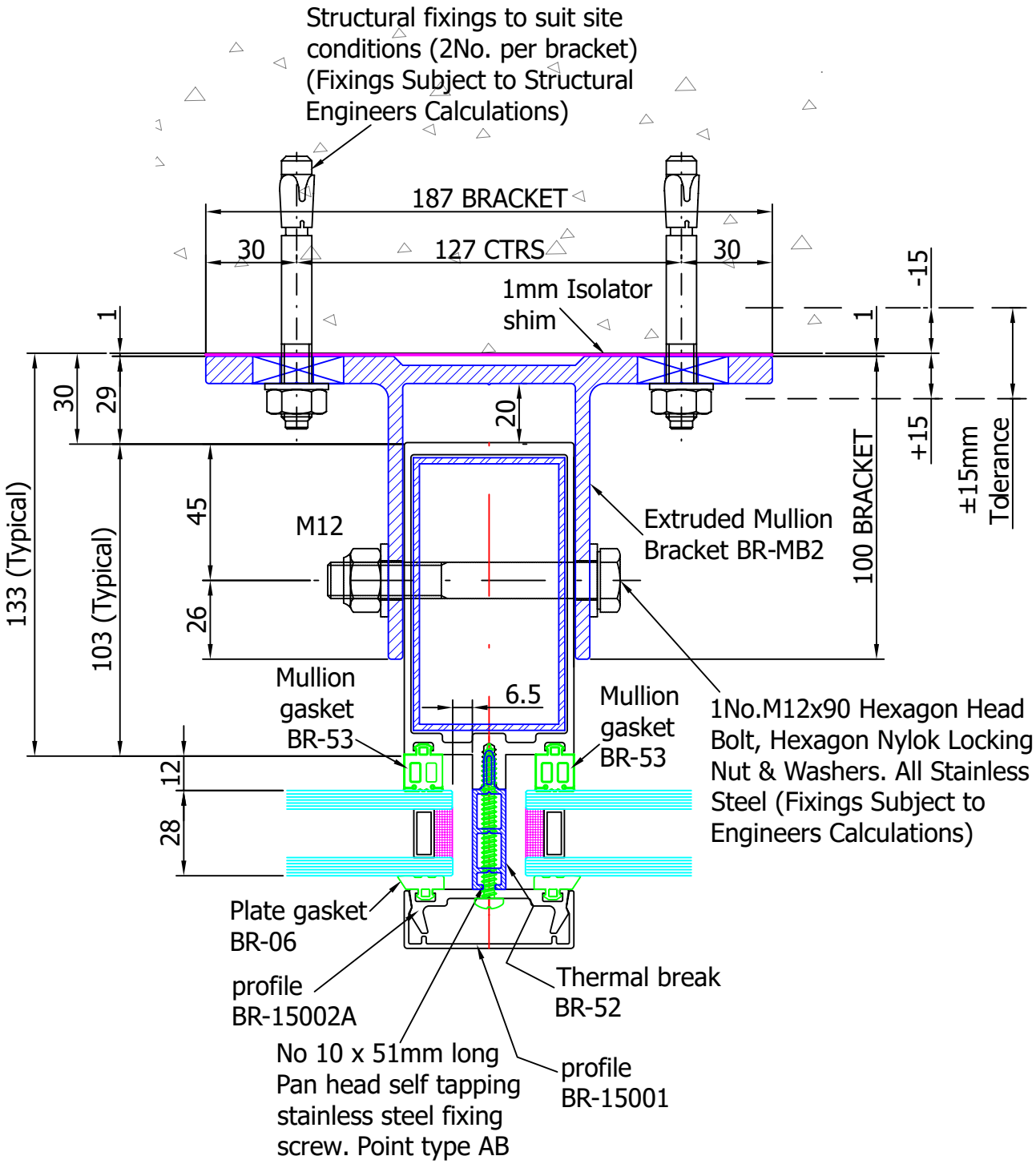

## Section37 - Fixing Details Including Joint Spigot

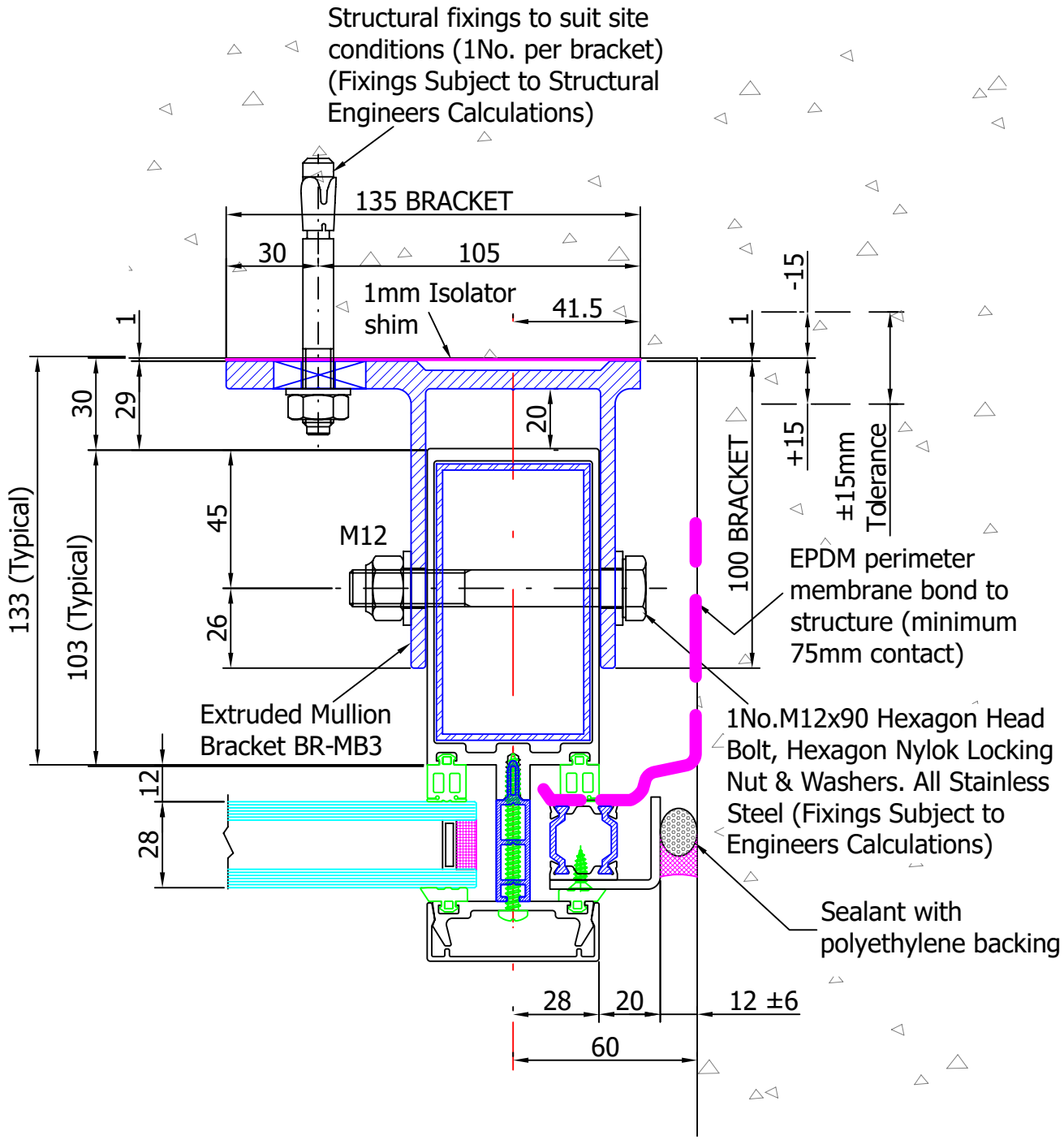

## Section37 - Fixing Details Including Joint Spigot

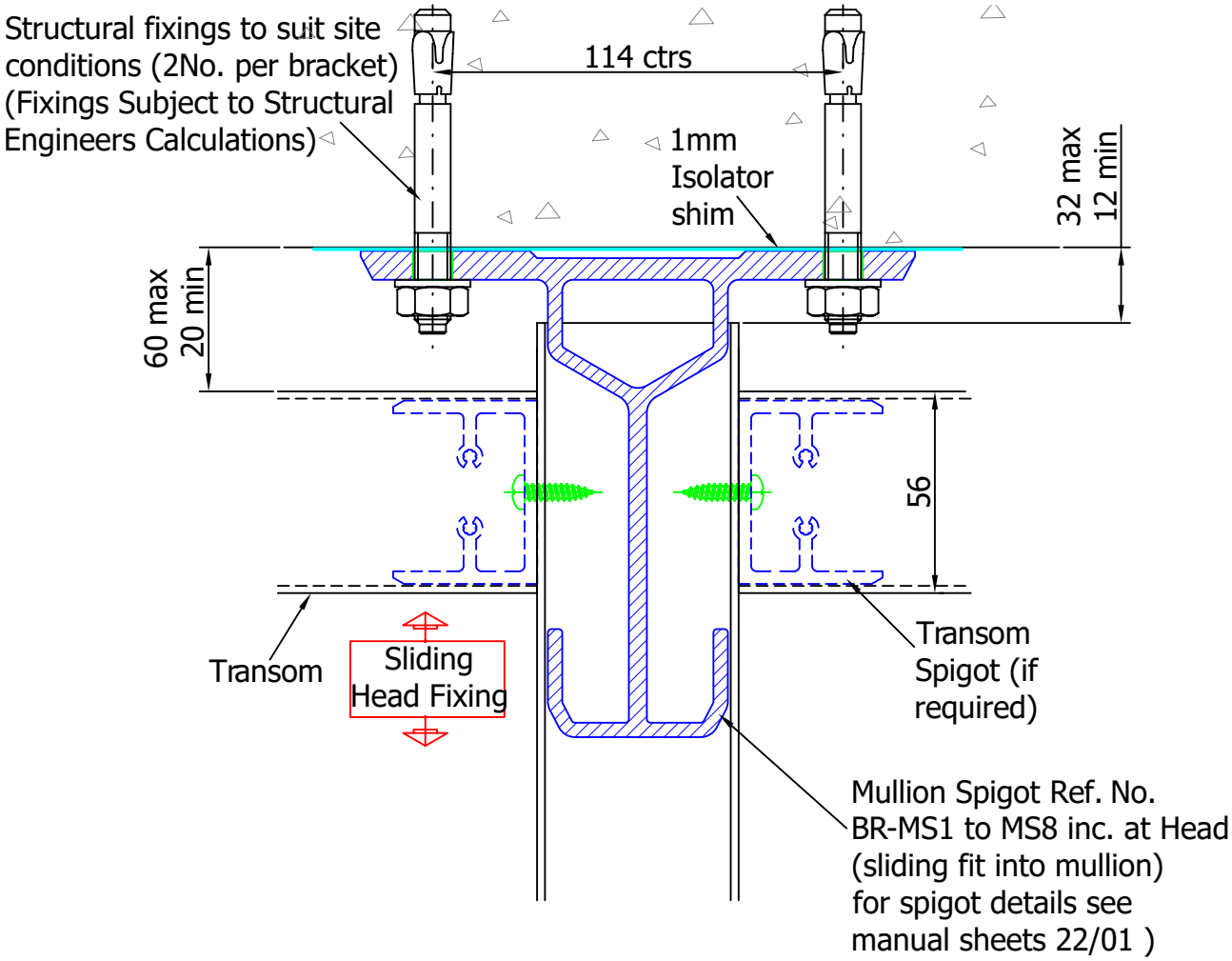

## Section37 - Fixing Details Including Joint Spigot

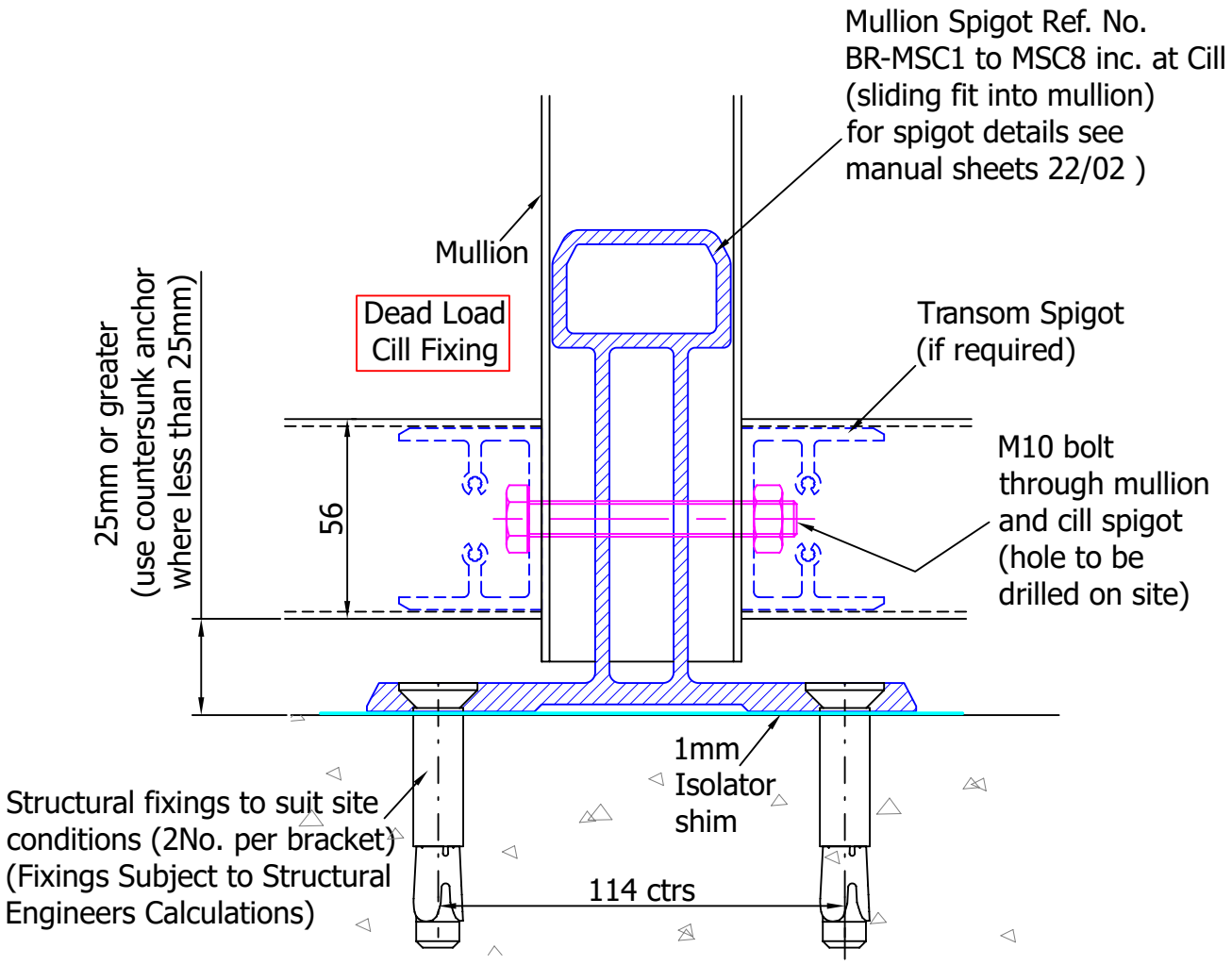

## Section37 - Fixing Details Including Joint Spigot

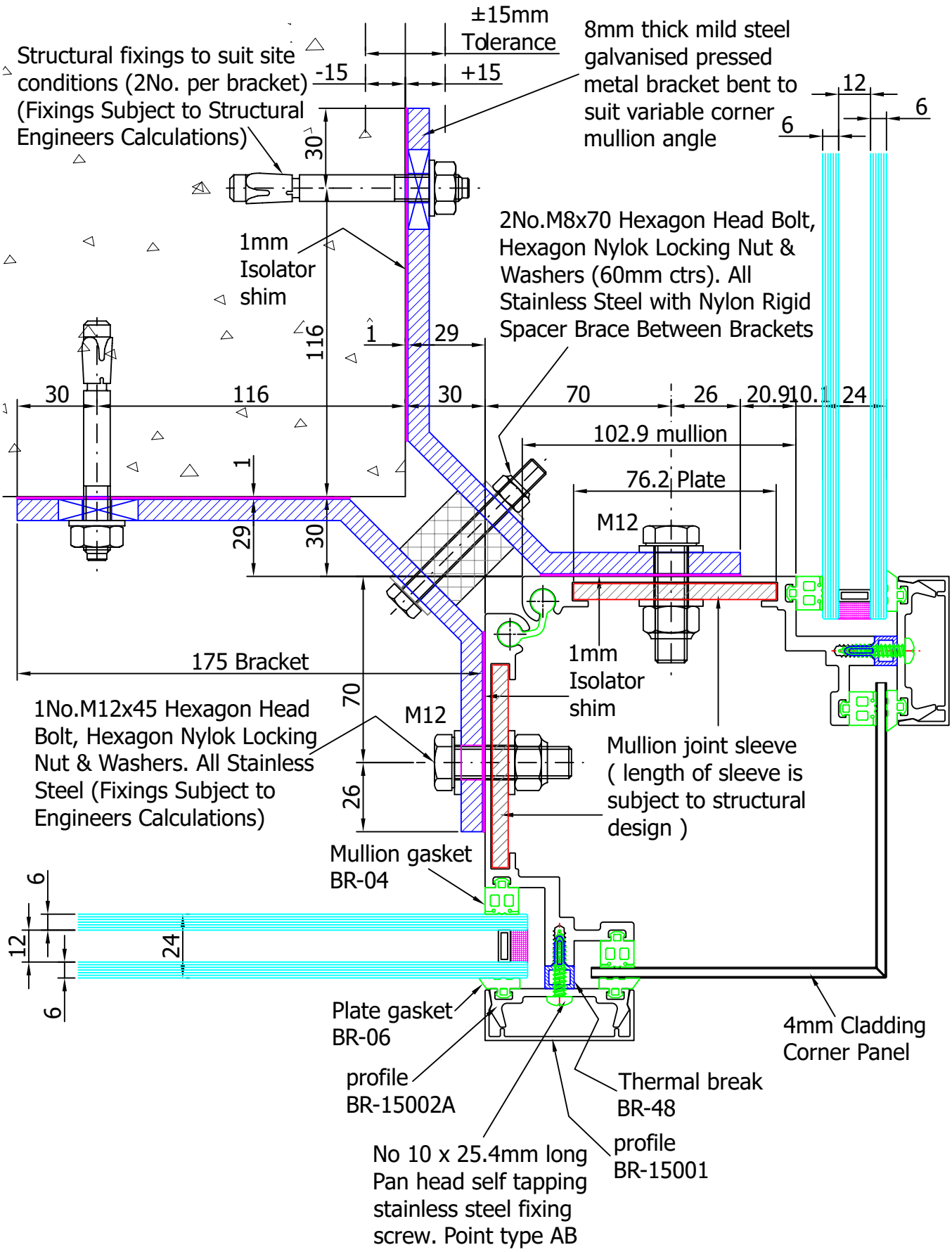

## Section37 - Fixing Details Including Joint Spigot

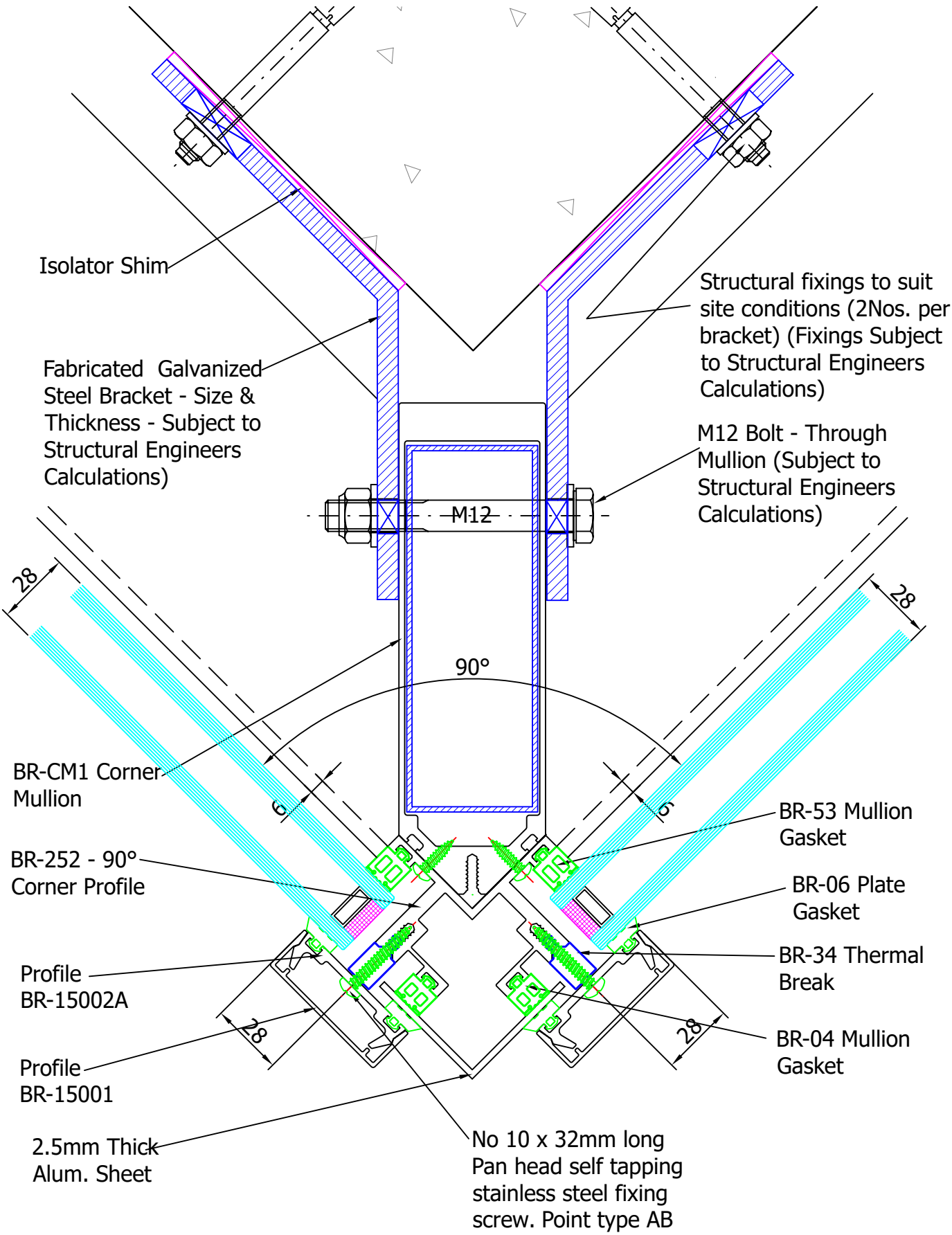

## Section37 - Fixing Details Including Joint Spigot

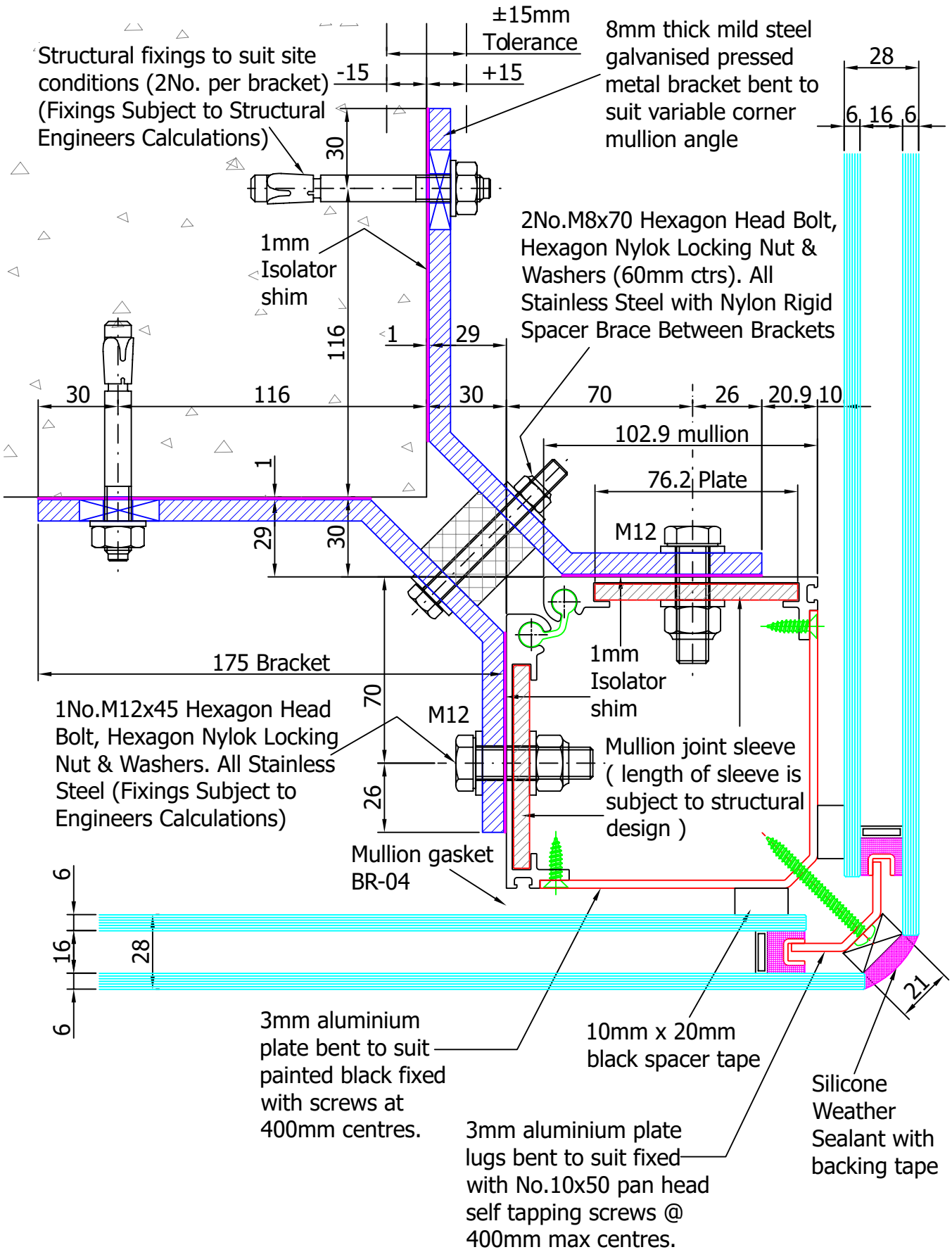

## Section37 - Fixing Details Including Joint Spigot

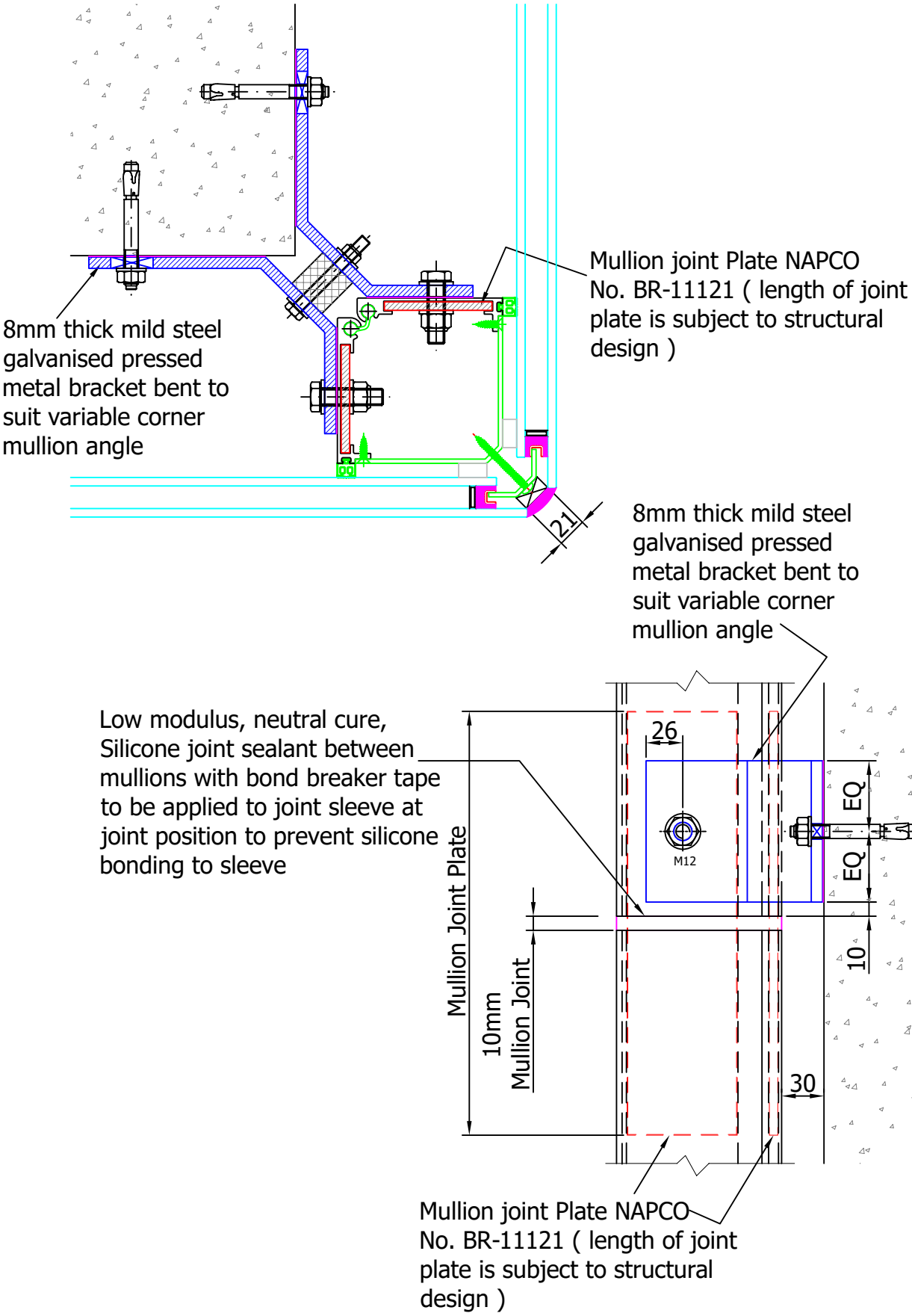

## Section37 - Fixing Details Including Joint Spigot

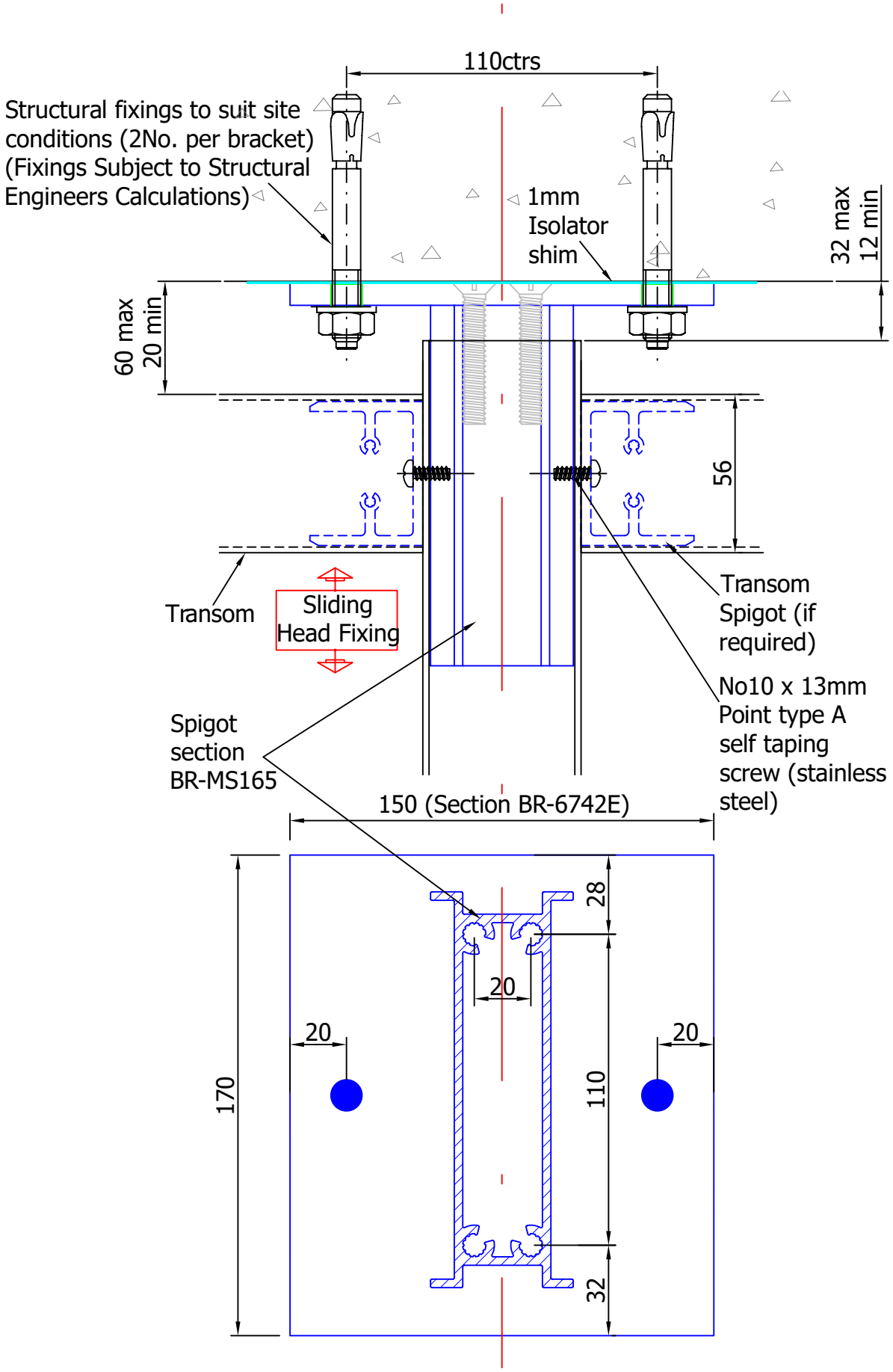

## Section37 - Fixing Details Including Joint Spigot

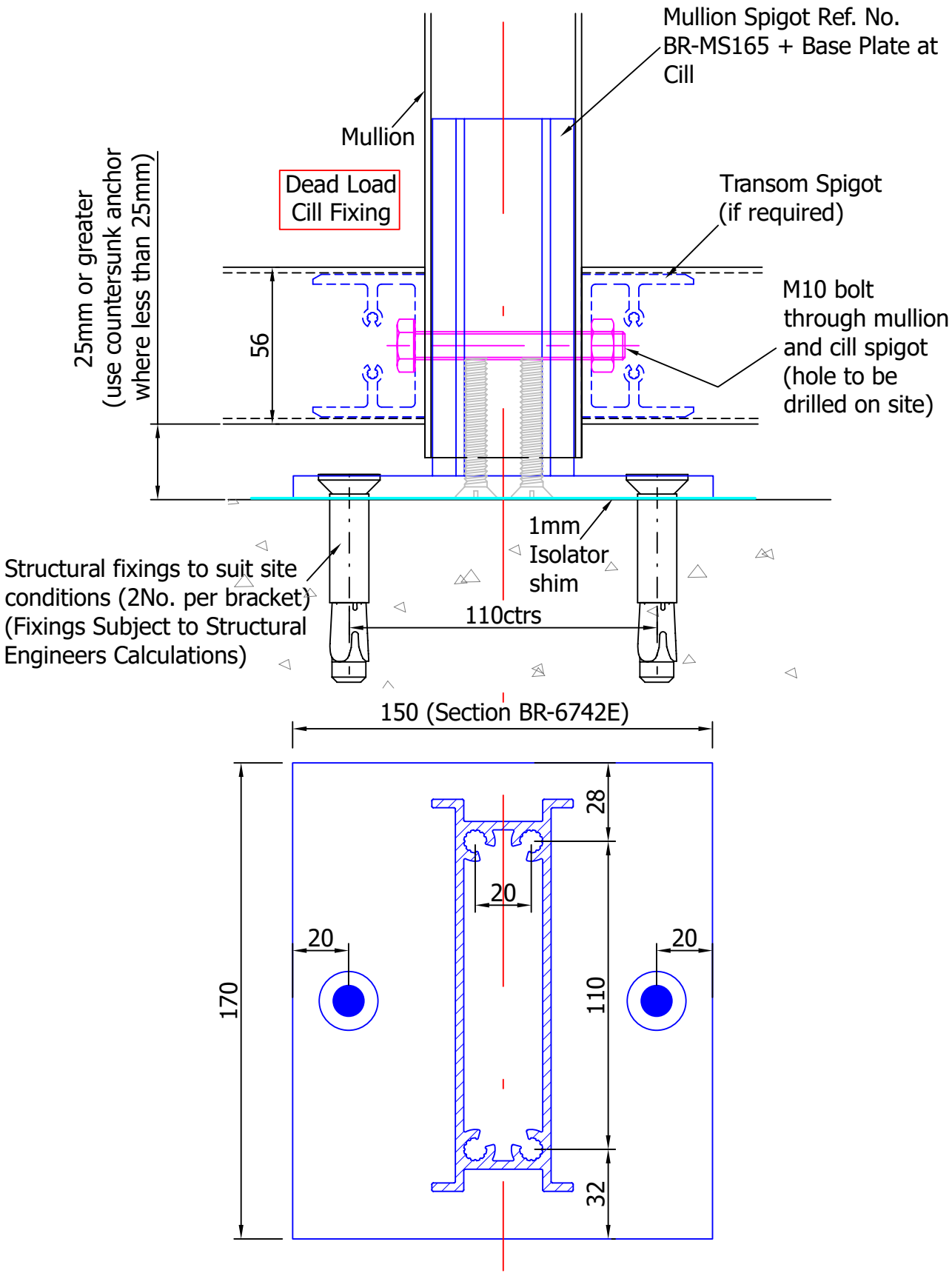

## Section38 - Fire Break Details

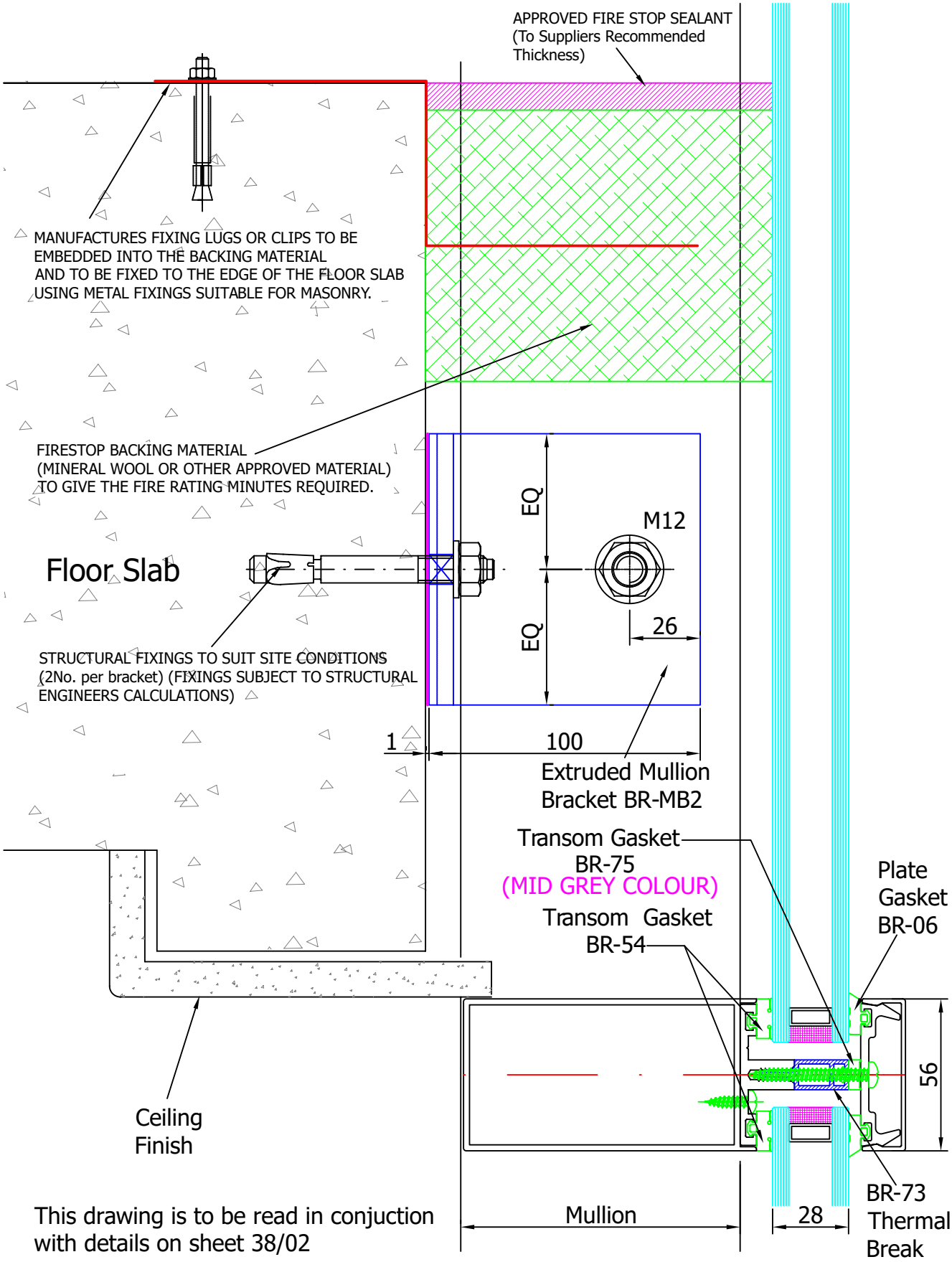


This drawing is to be read in conjuction with details on sheet 38/02

## Section38 - Fire Break Details

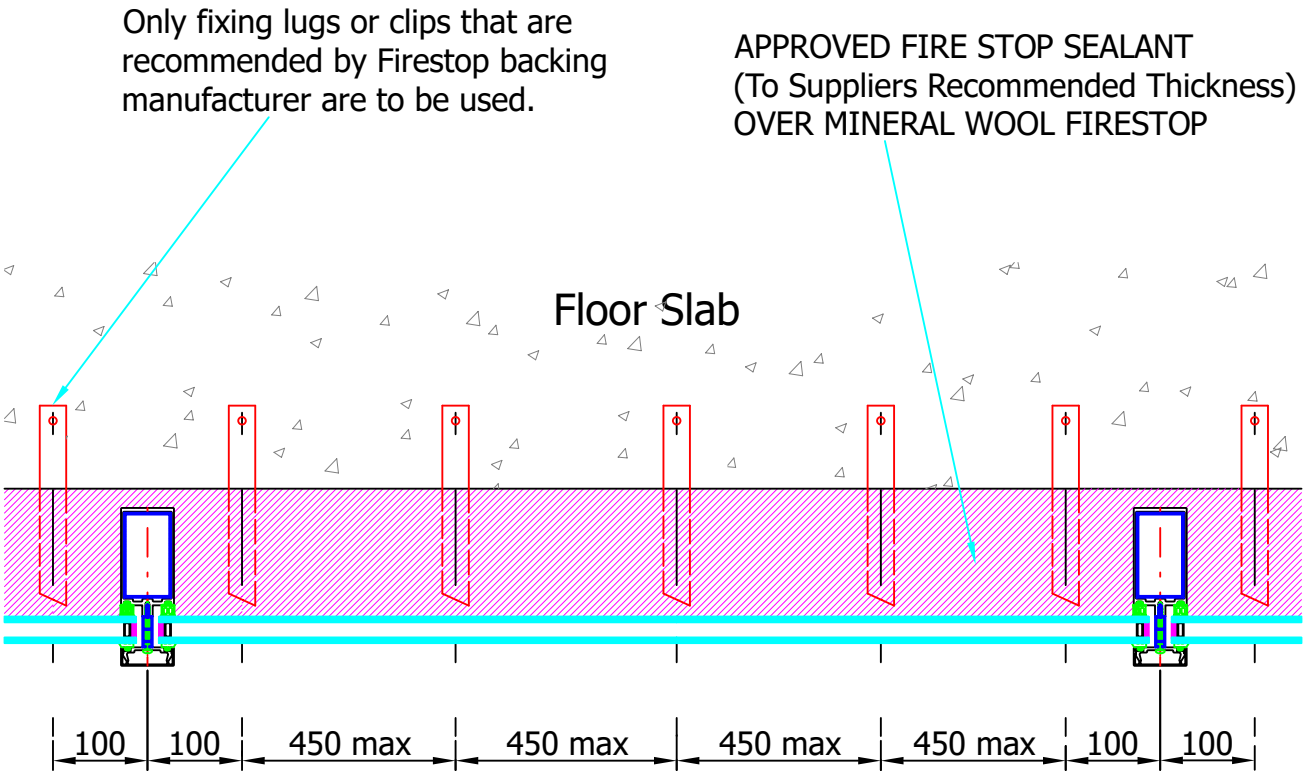


This drawing is to be read in conjuction with details on 38/01

Brital recommend that the Technical Department of the firestop manufacturer should be contacted to advise on their recommendations for specific applications and that all proposed firestop details must be checked and approved by the relevant local authorities prior to installation.

## Section38 - Fire Break Details

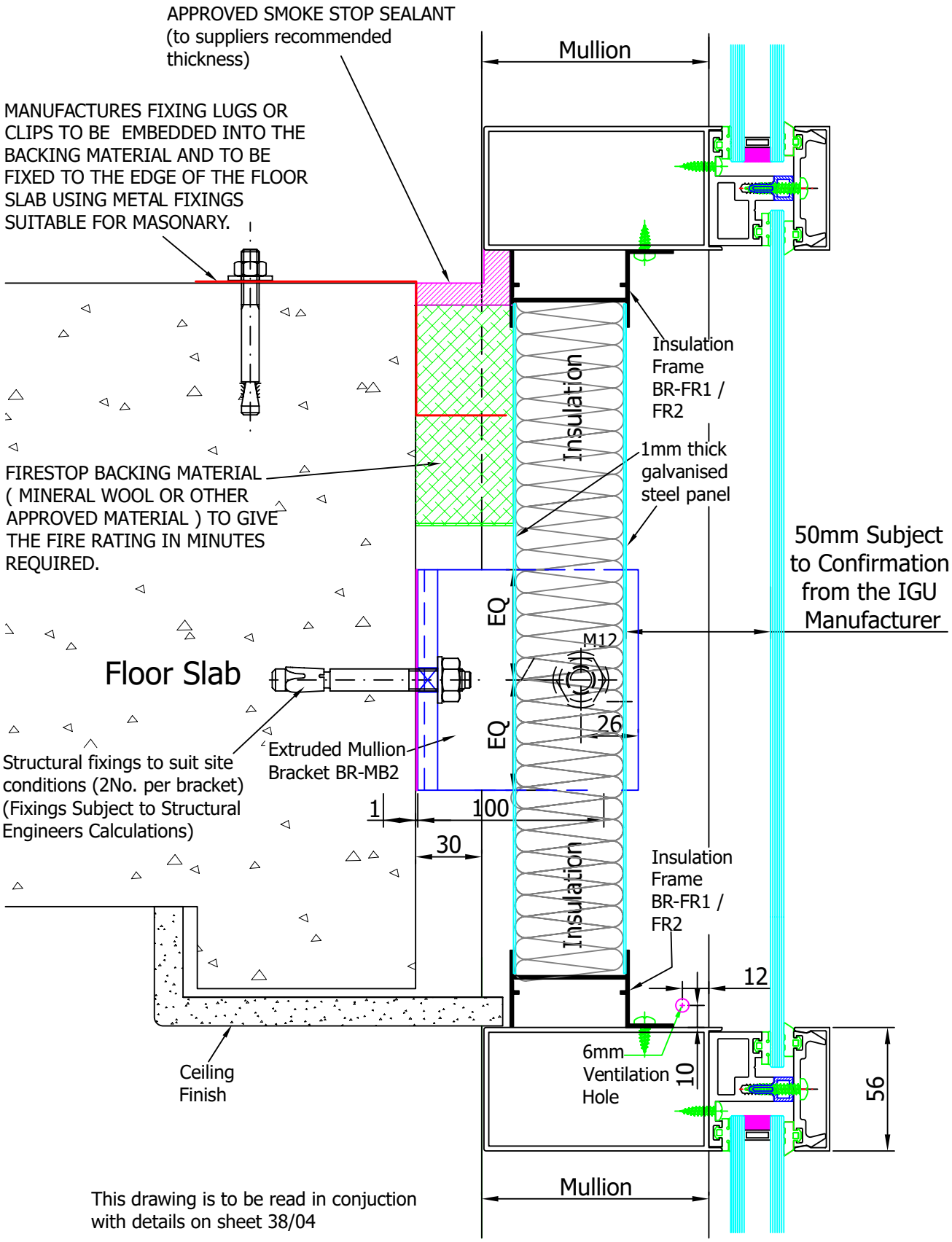


This drawing is to be read in conjuction
with details on sheet 38/04

## Section38 - Fire Break Details

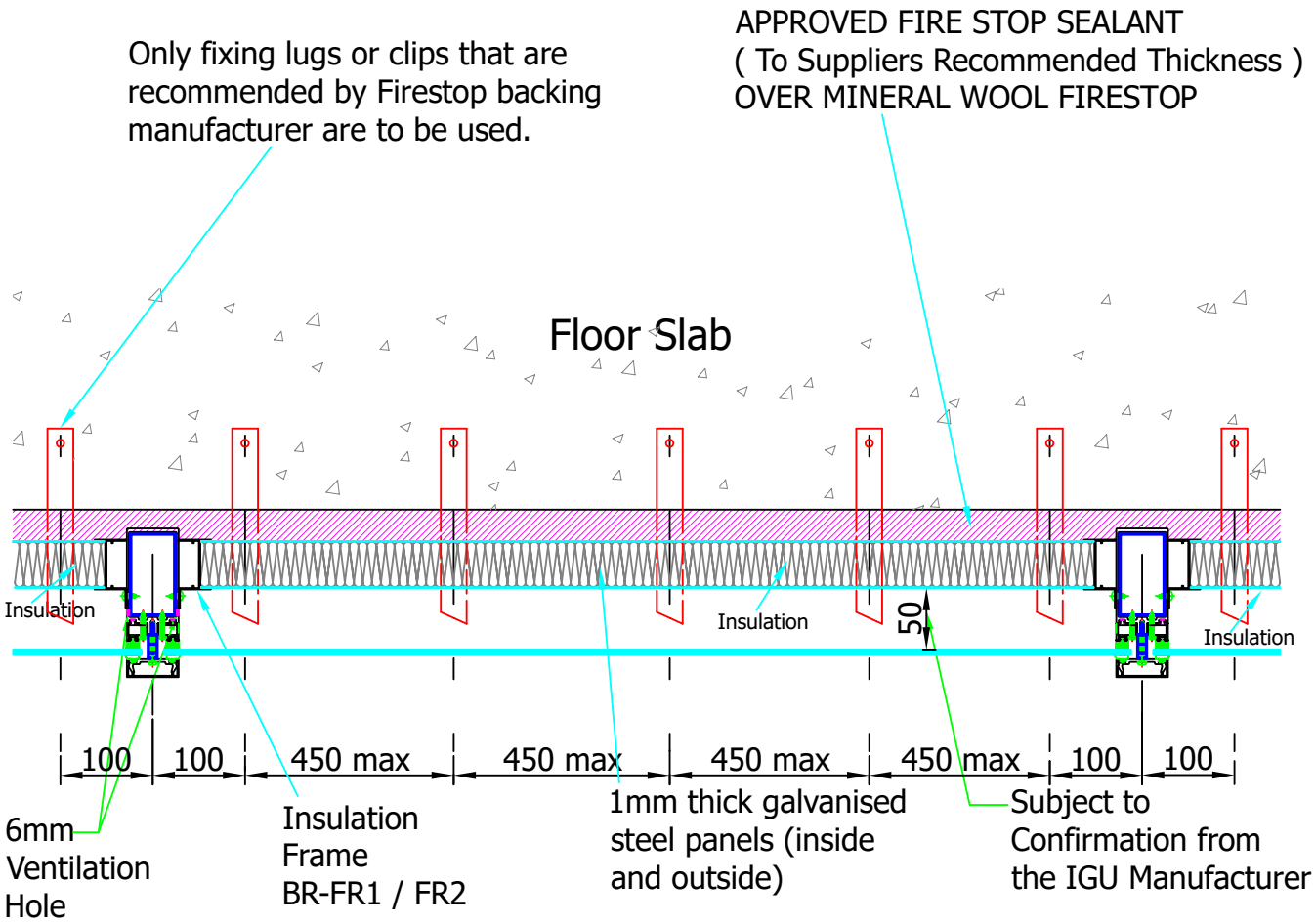


This drawing is to be read in conjuction with details on 38/03

Brital recommend that the Technical Department of the firestop manufacturer should be contacted to advise on their recommendations for specific applications and that all proposed firestop details must be checked and approved by the relevant local authorities prior to installation.

## Section38 - Fire Break Details

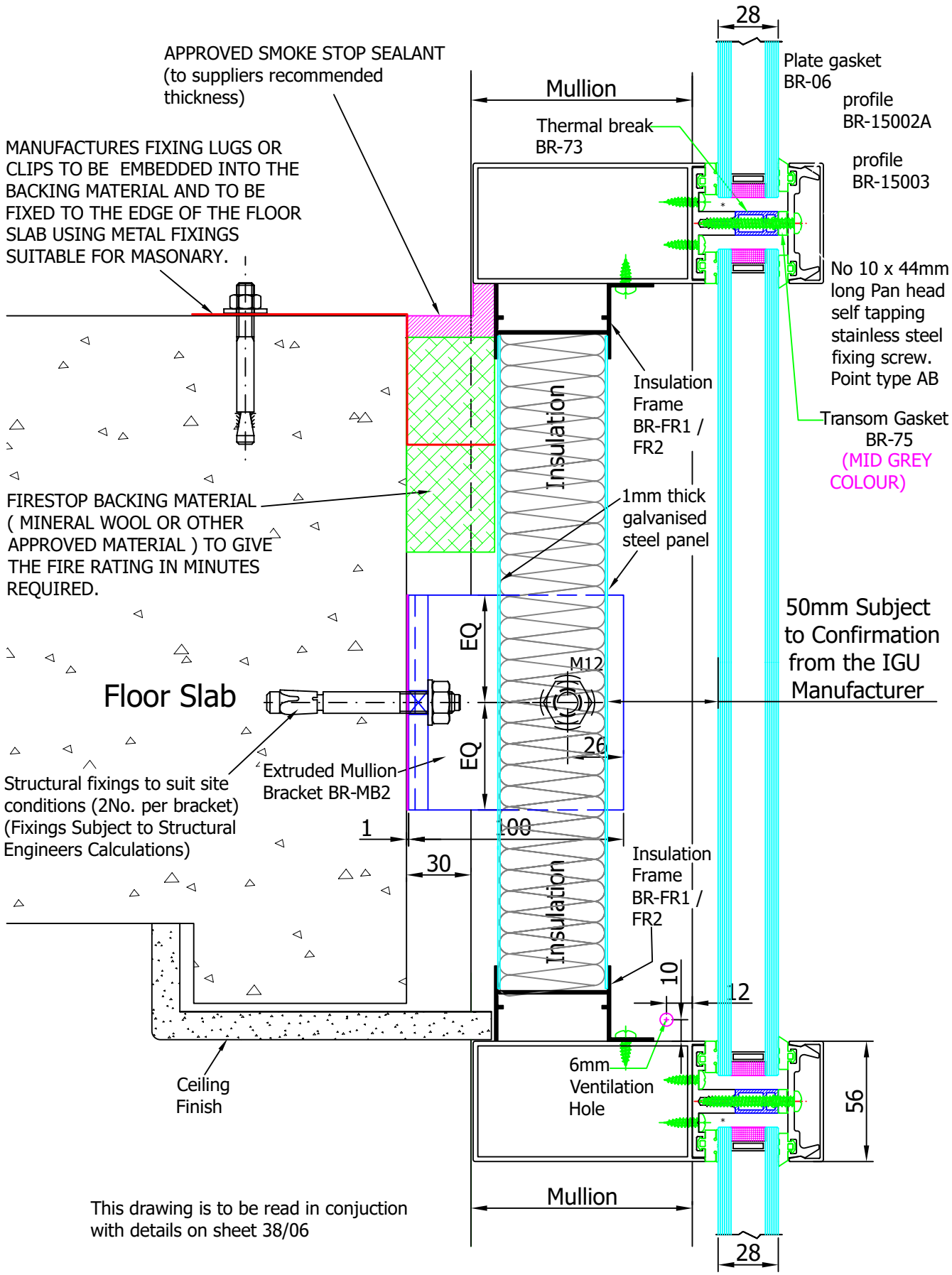


This drawing is to be read in conjuction
with details on sheet 38/06

## Section38 - Fire Break Details

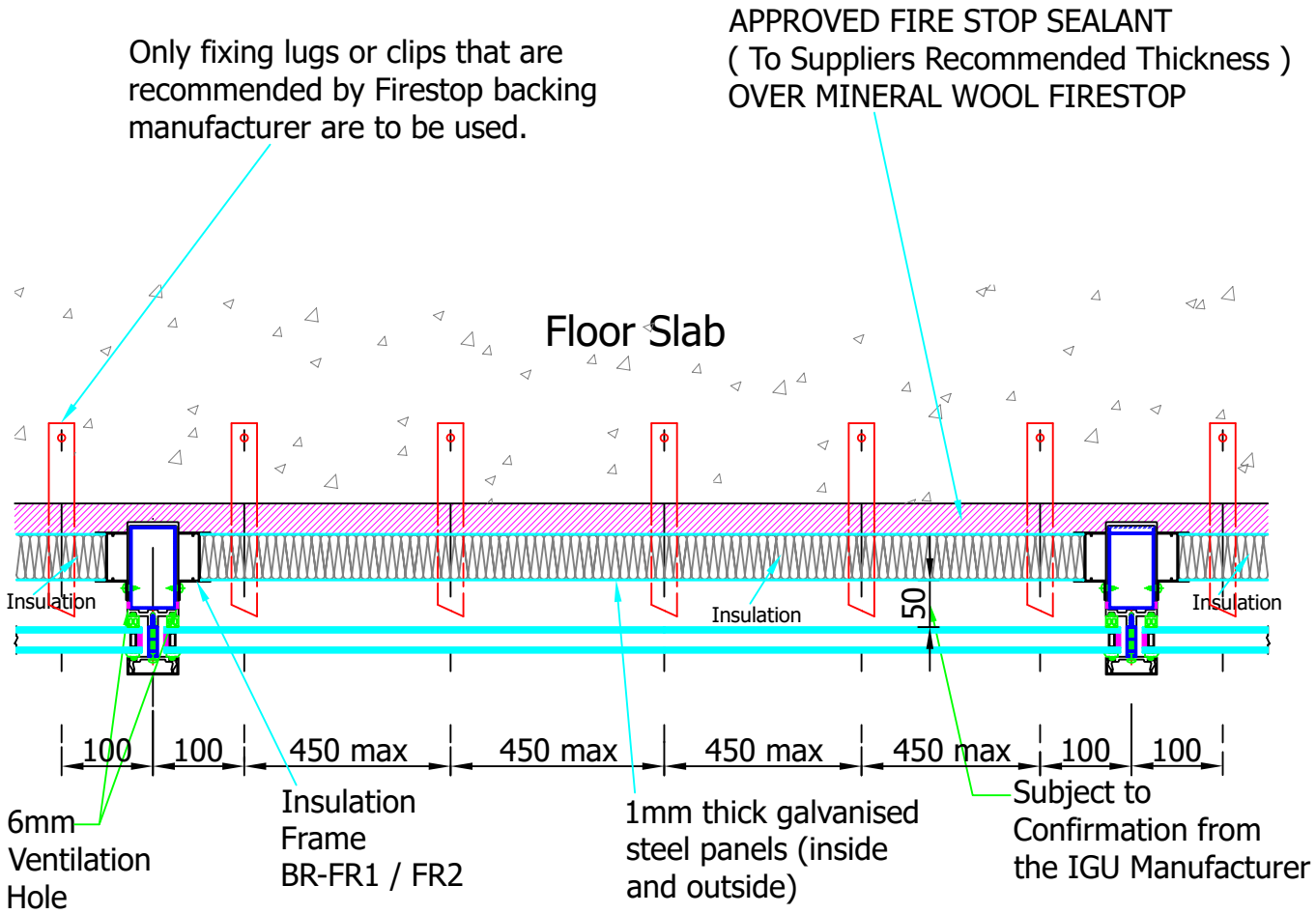


This drawing is to be read in conjuction with details on 38/05
Brital recommend that the Technical Department of the firestop manufacturer should be contacted to advise on their recommendations for specific applications and that all proposed firestop details must be checked and approved by the relevant local authorities prior to installation.

## Section38 - Fire Break Details

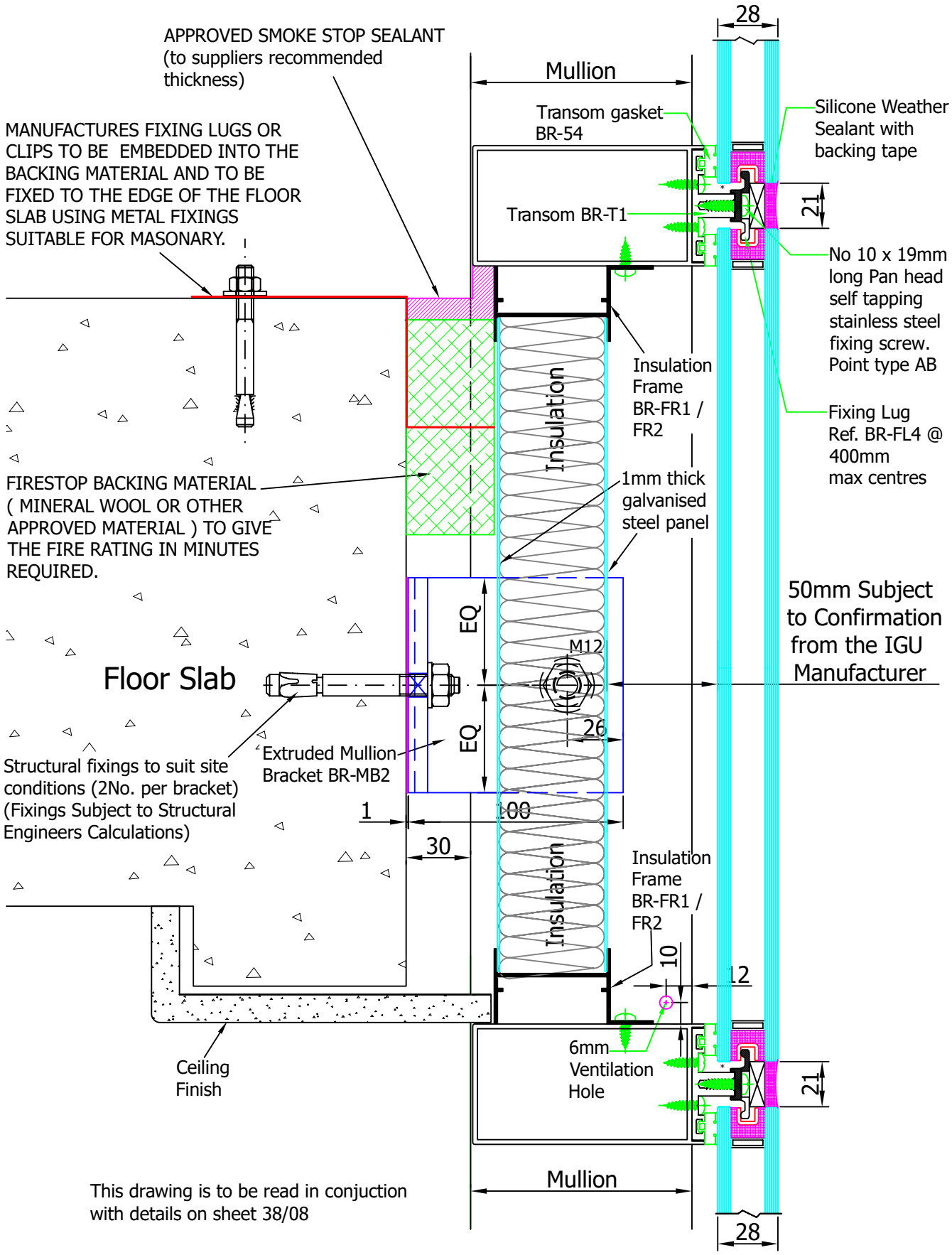


This drawing is to be read in conjuction with details on sheet 38/08

## Section38 - Fire Break Details

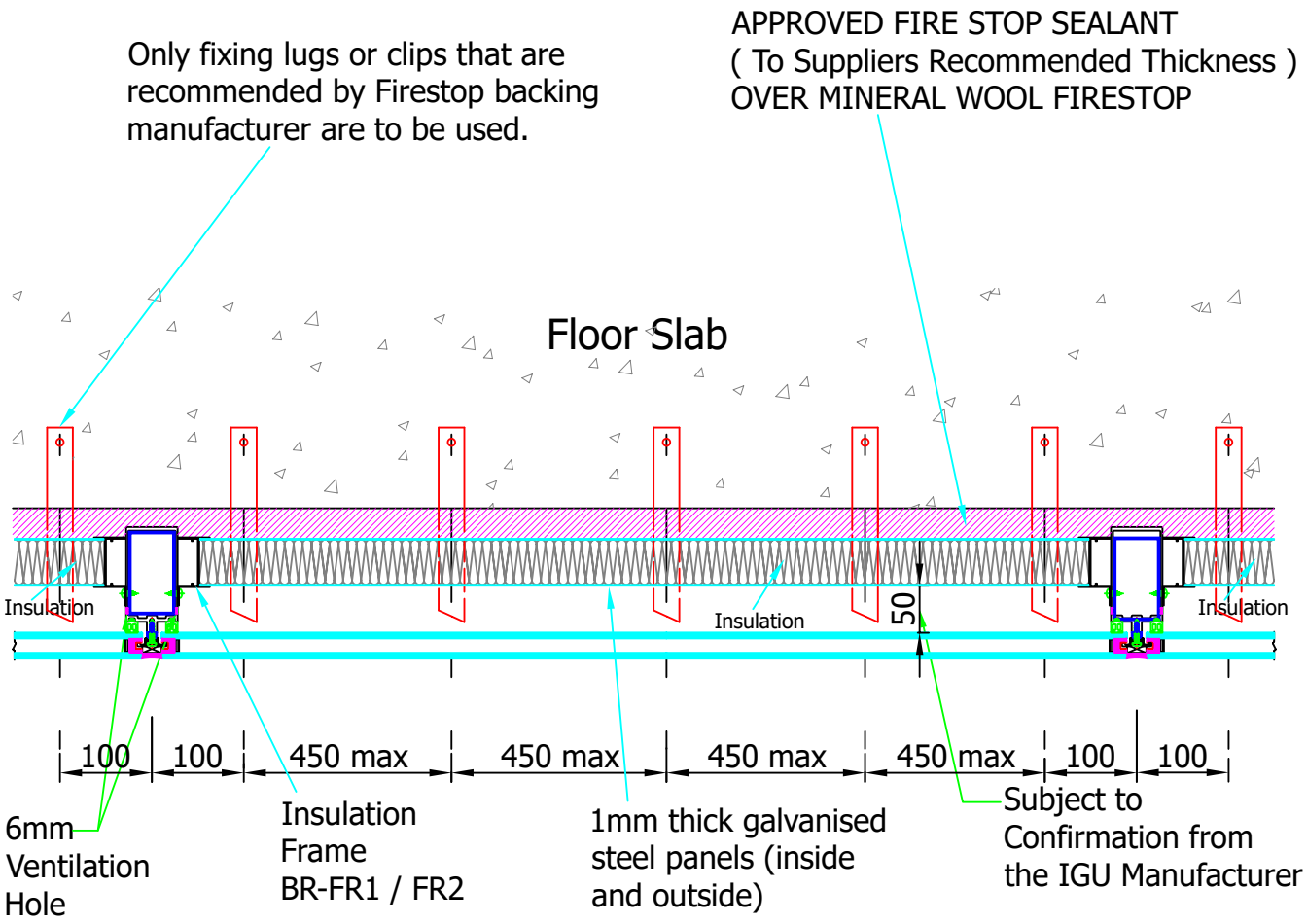


This drawing is to be read in conjuction with details on 38/07
Brital recommend that the Technical Department of the firestop manufacturer should be contacted to advise on their recommendations for specific applications and that all proposed firestop details must be checked and approved by the relevant local authorities prior to installation.

## Section39 - Miscellaneous GA's

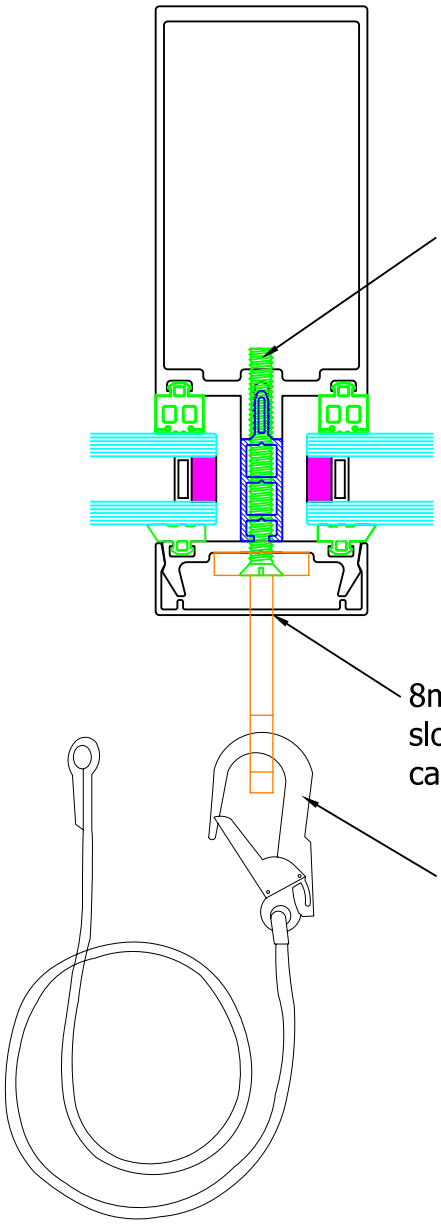


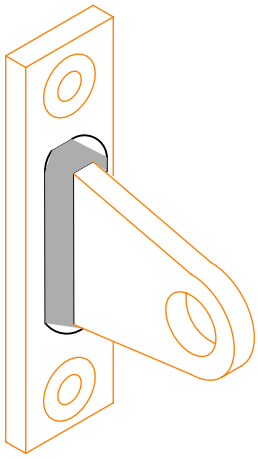

Fabricated Stainless Steel Restraint bracket in grade 304 or 316 Stainless steel by Curtain walling fabricator.

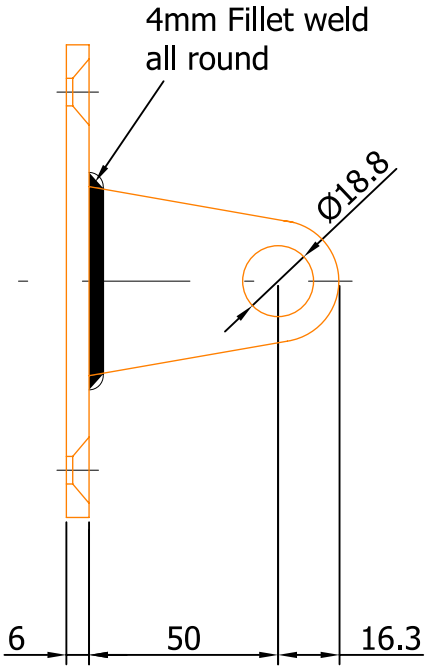


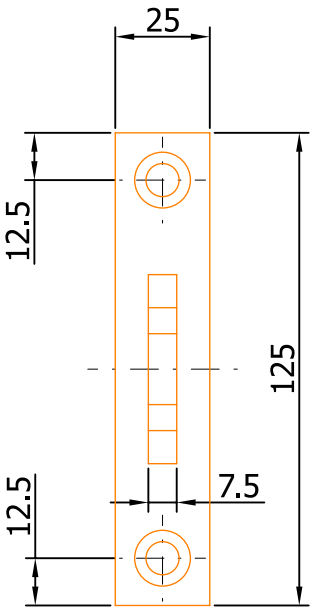

## Section39 - Miscellaneous GA's

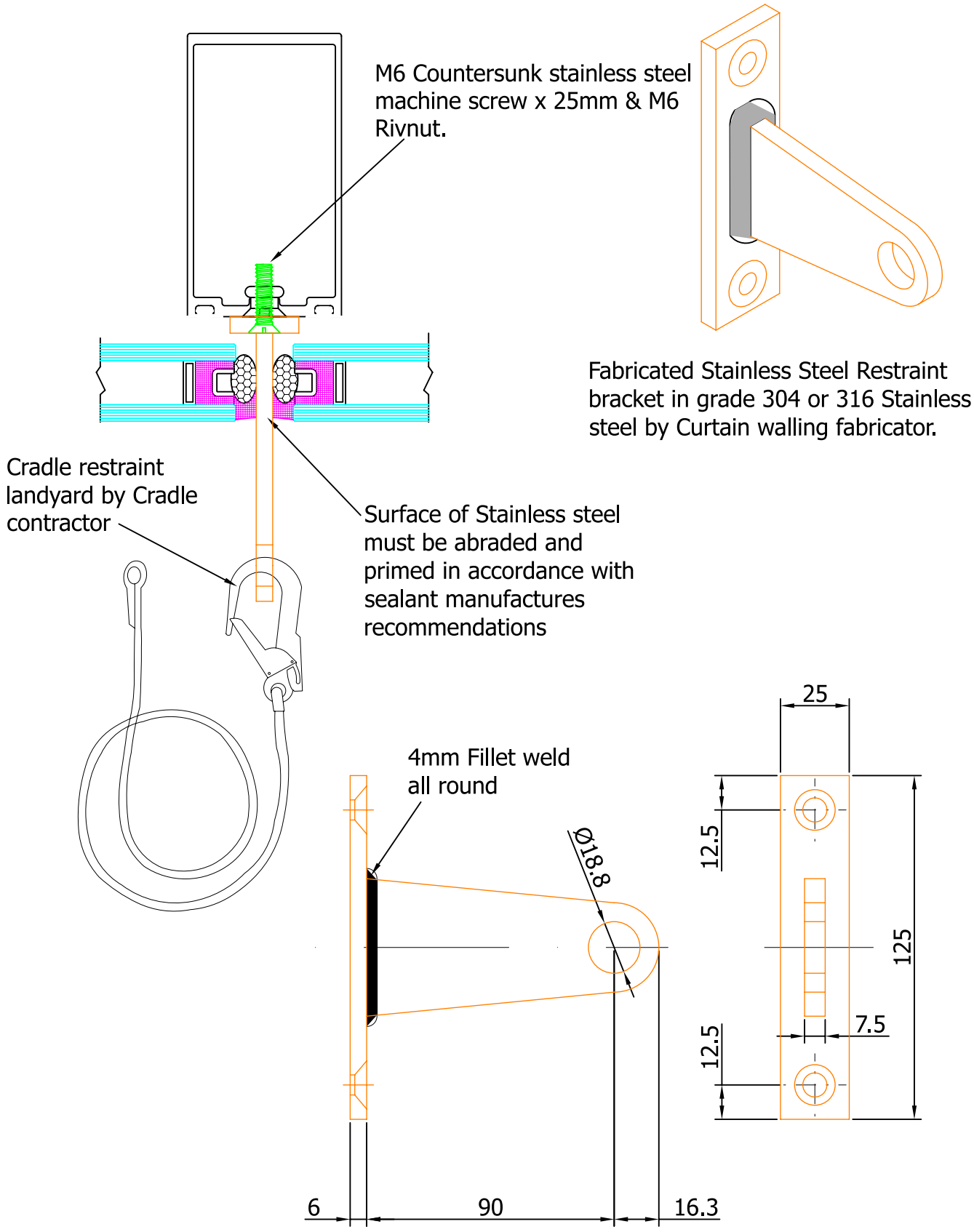

## Section39 - Miscellaneous GA's

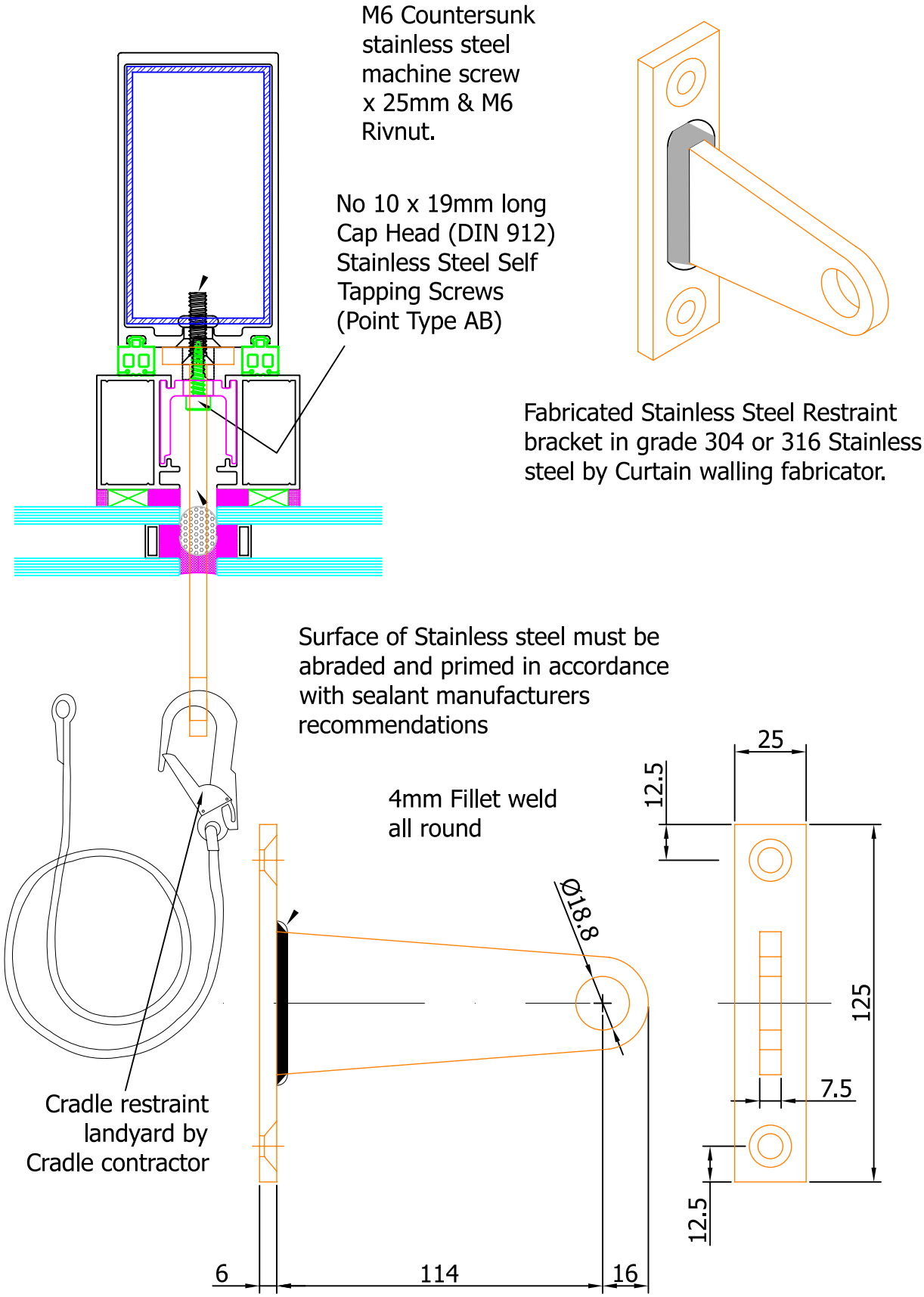

## Section39 - Miscellaneous GA's

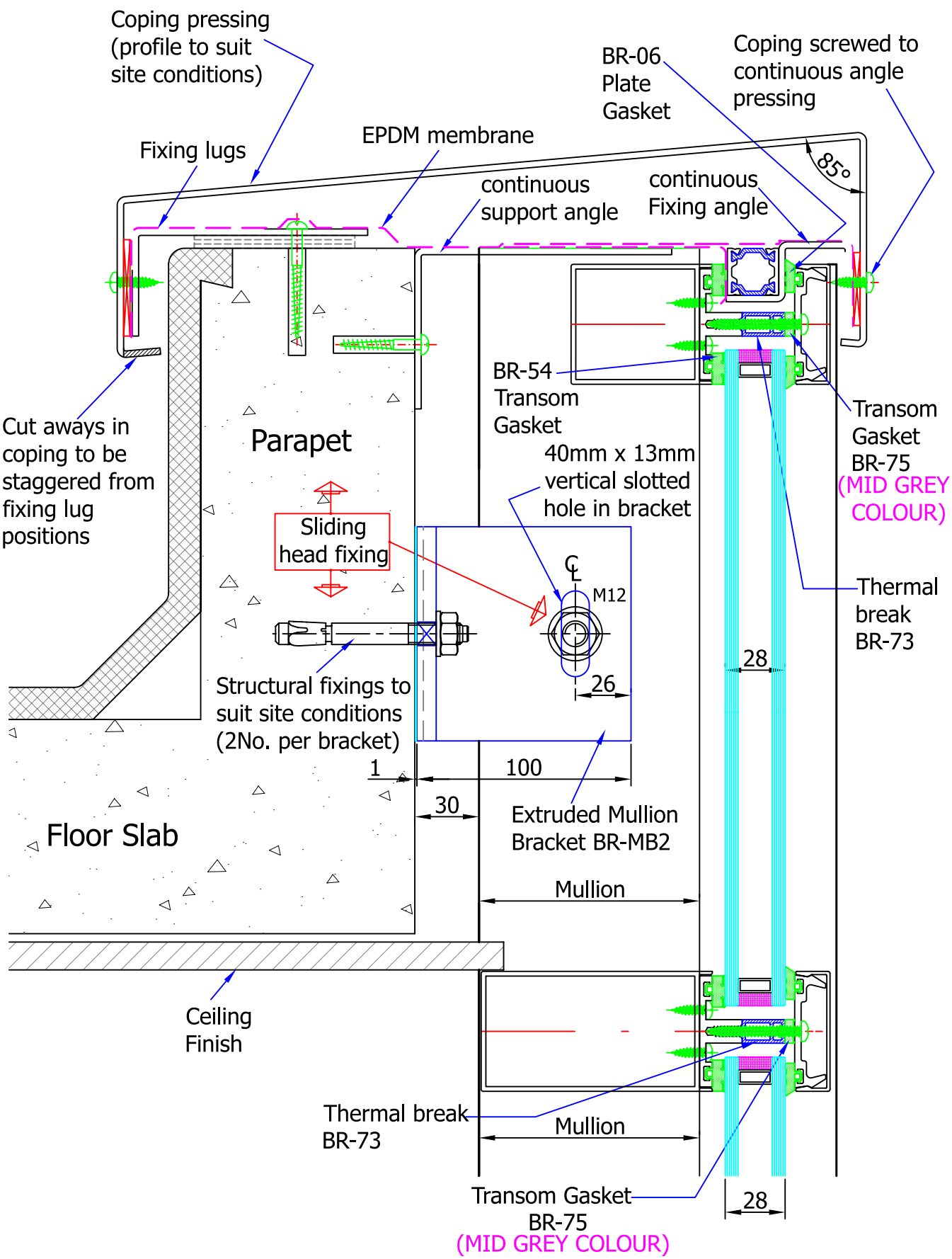

## Section39 - Miscellaneous GA's

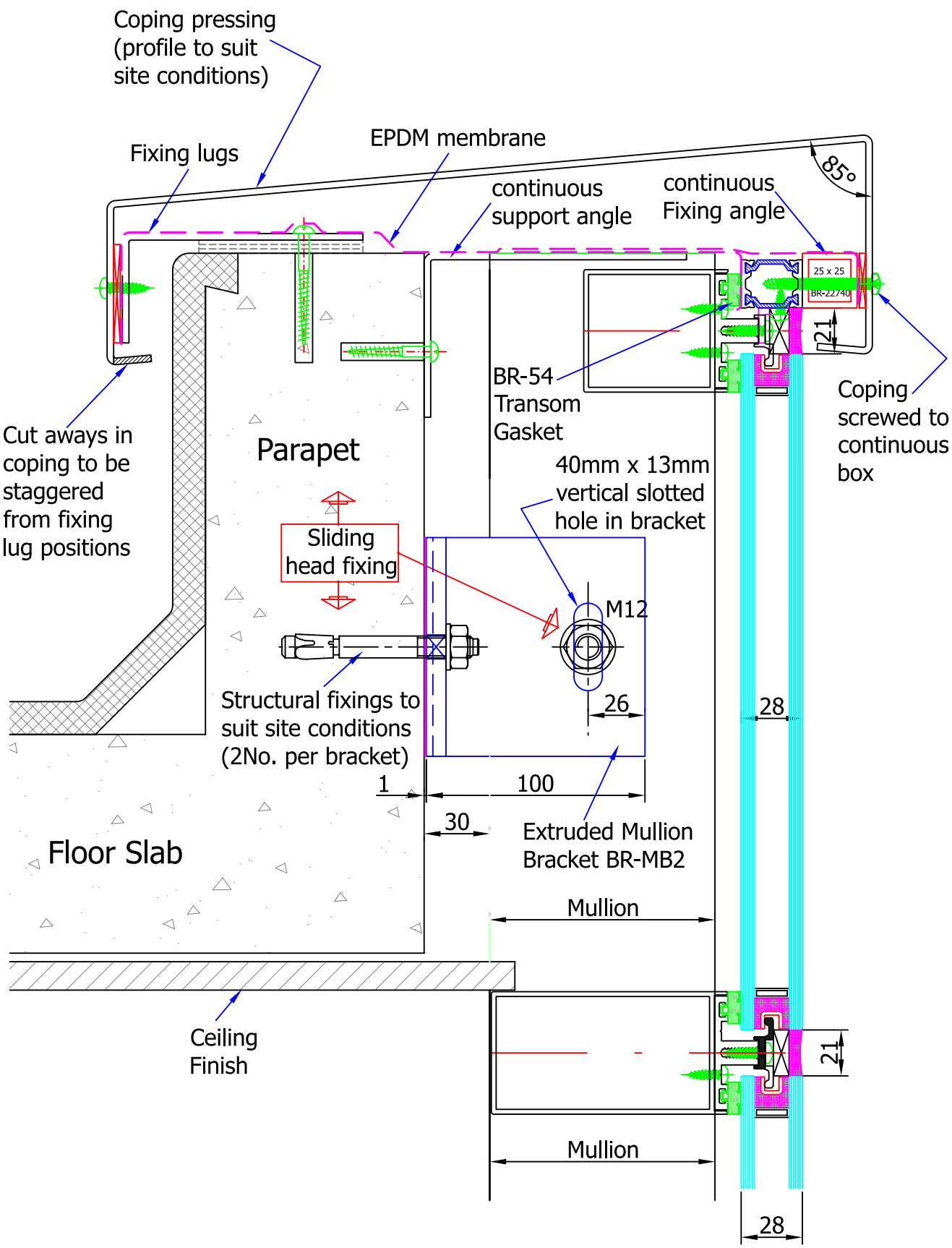

## Section39 - Miscellaneous GA's

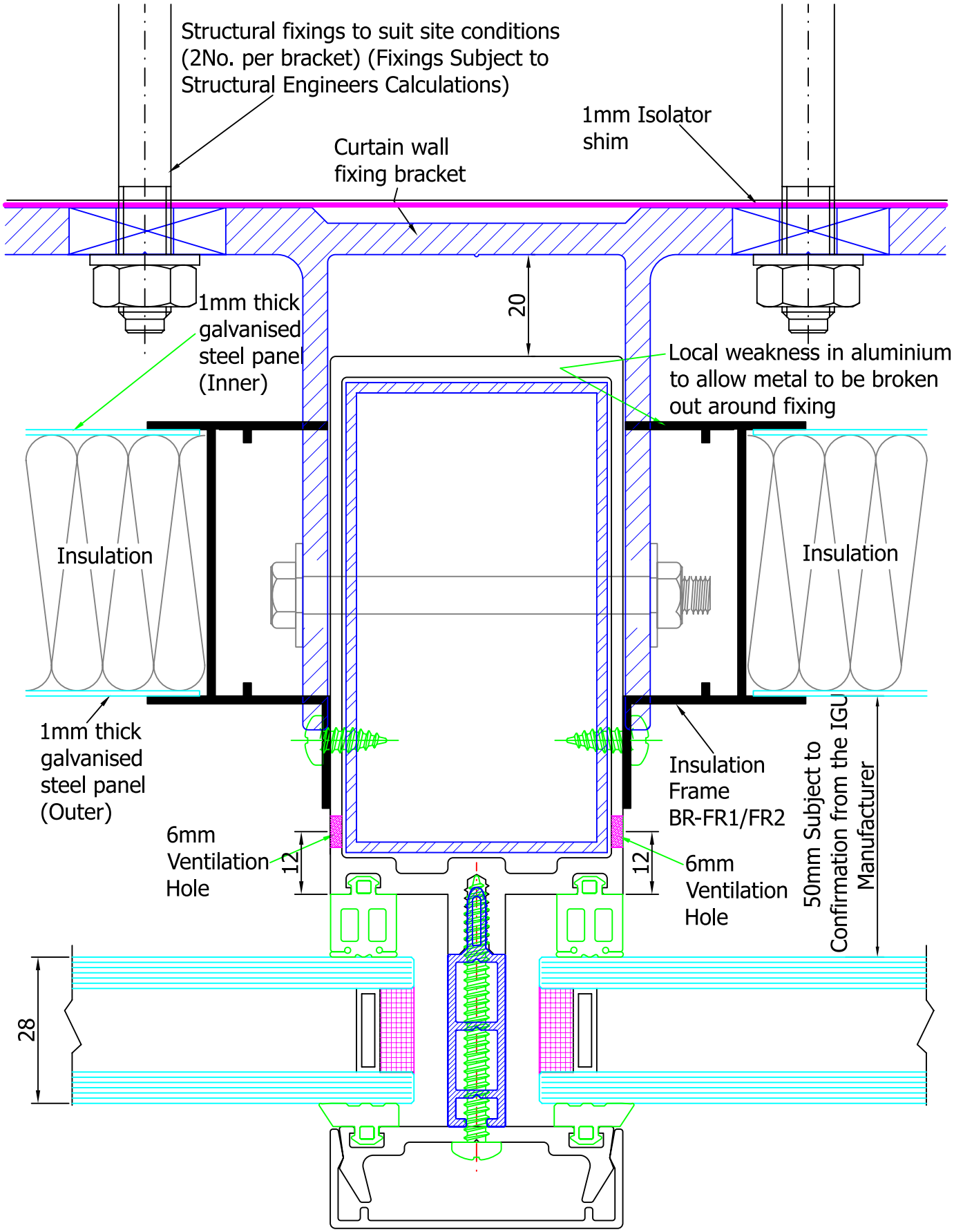

## Section39 - Miscellaneous GA's

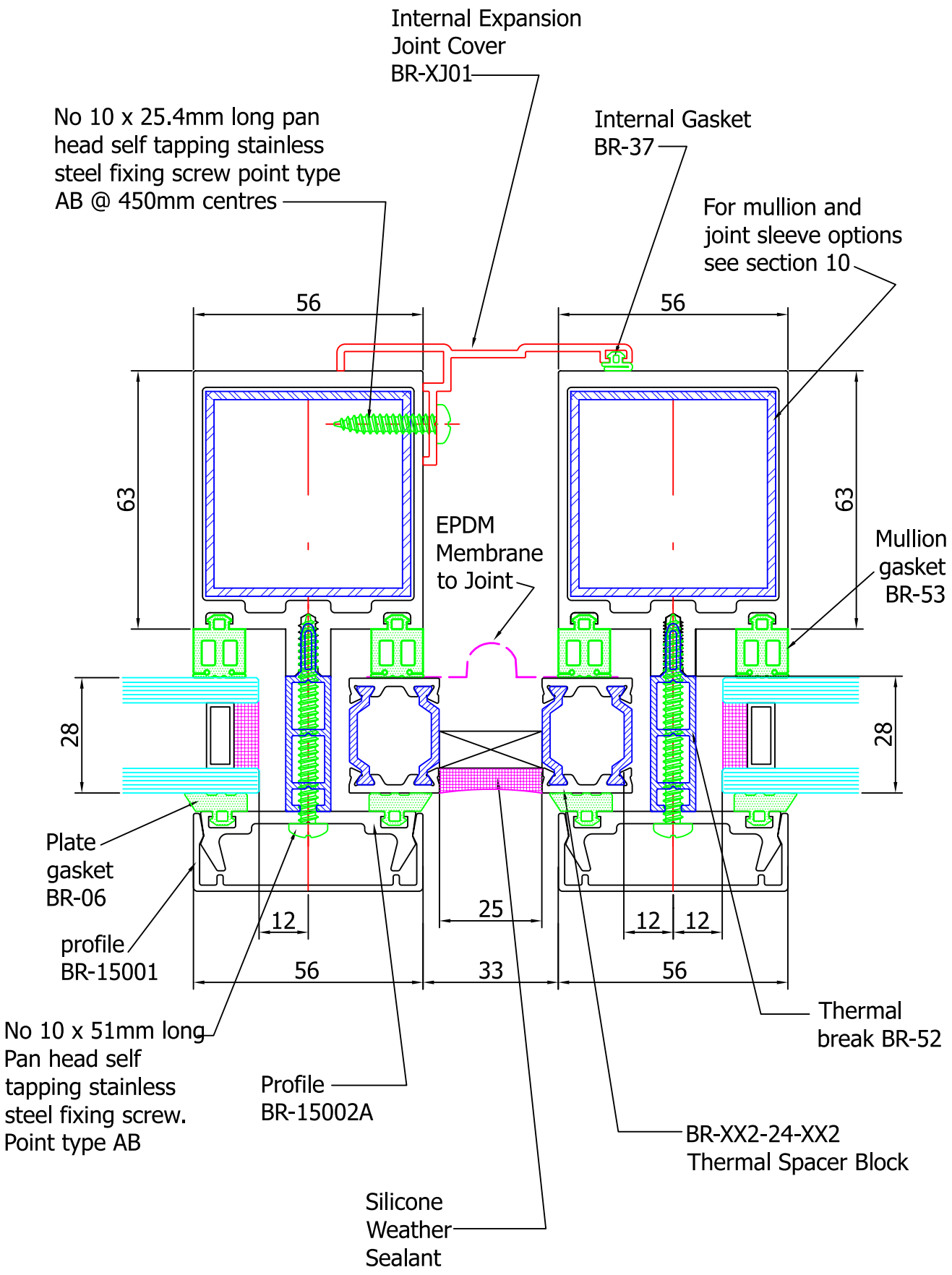

## Section39 - Miscellaneous GA's

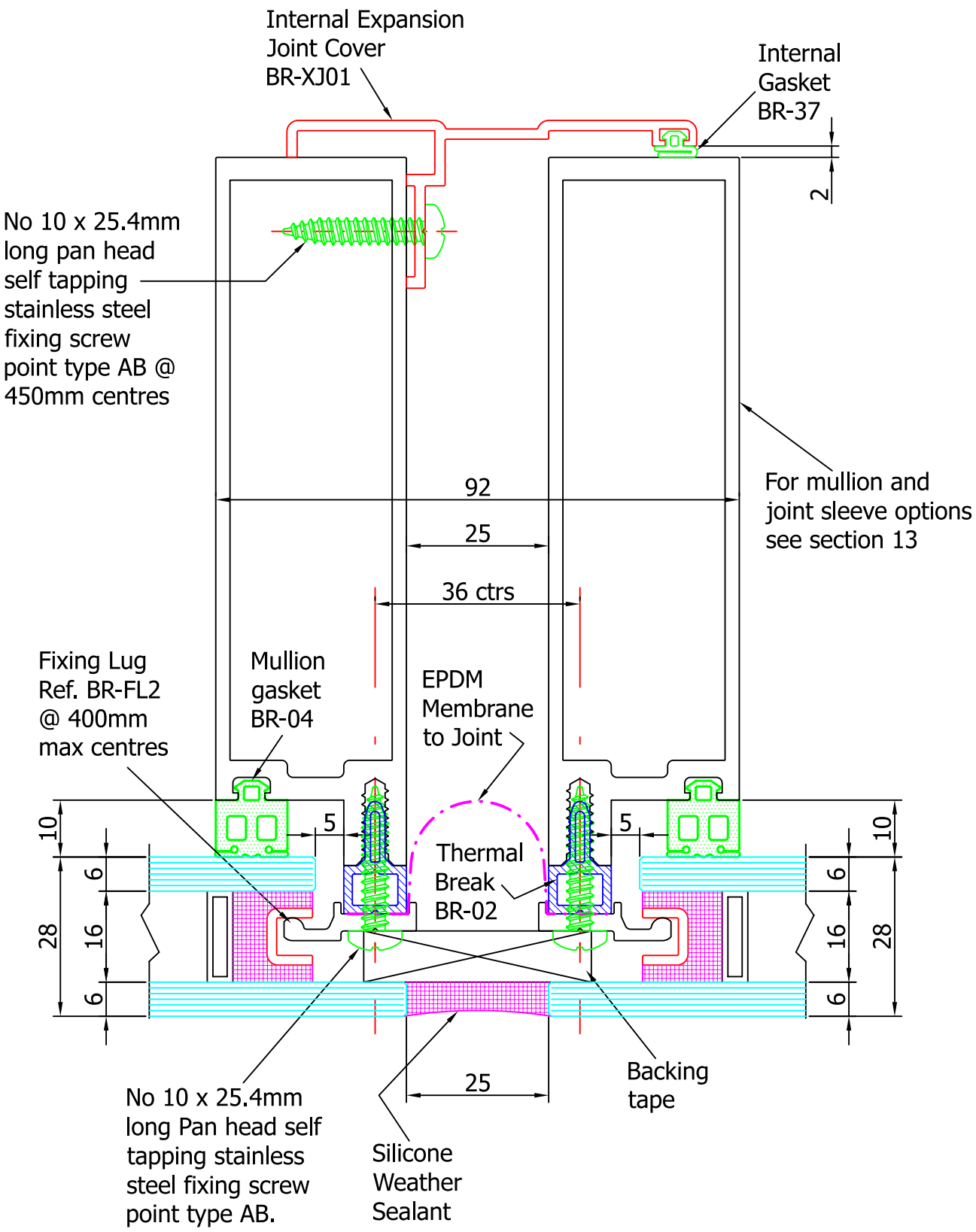

## Section40 - Frameless Opening Shutters

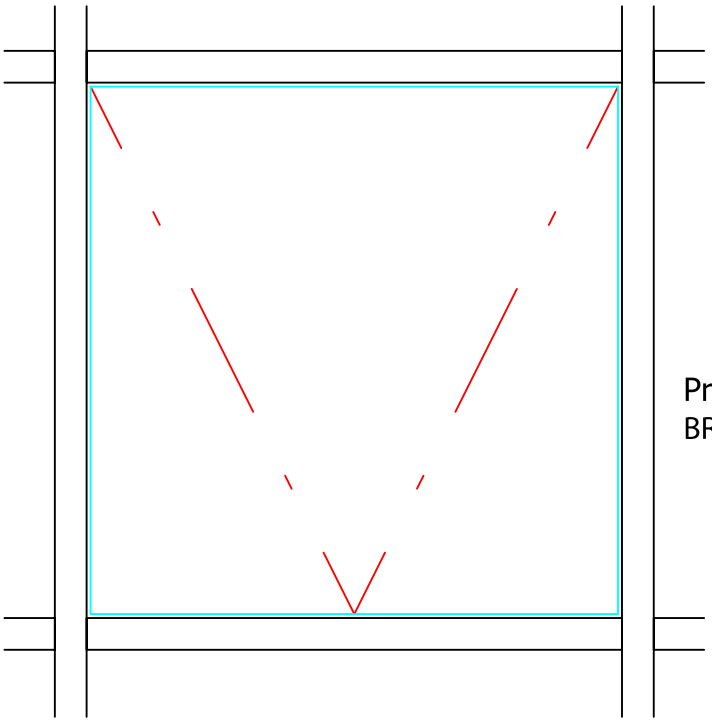

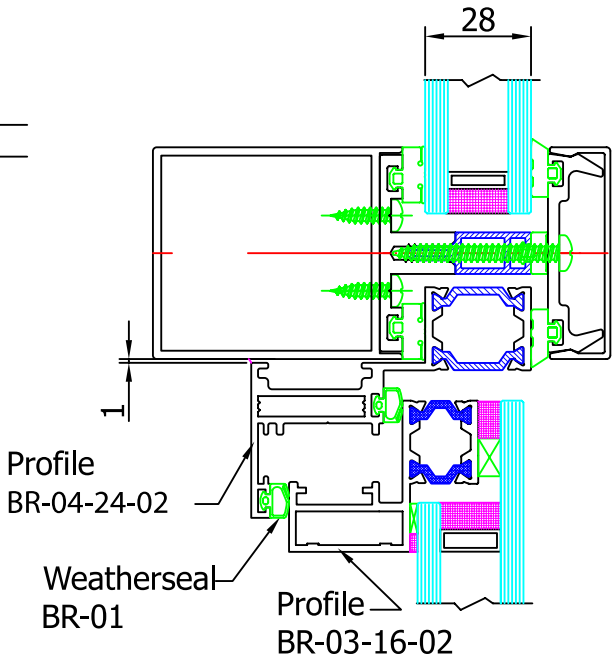


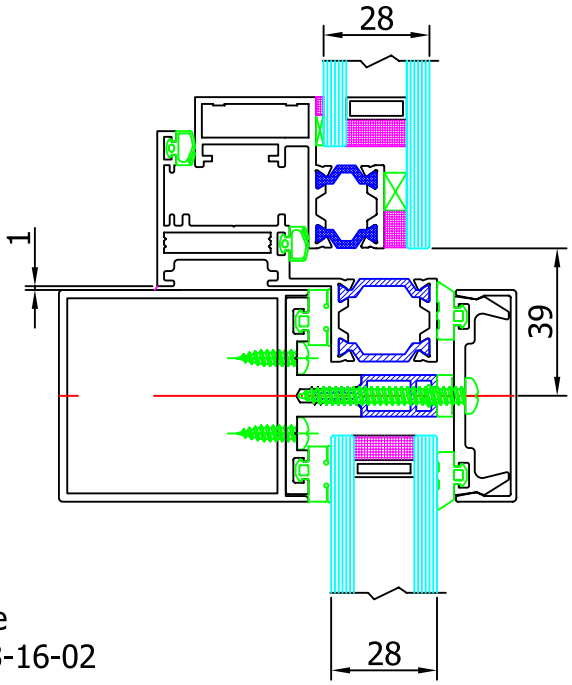


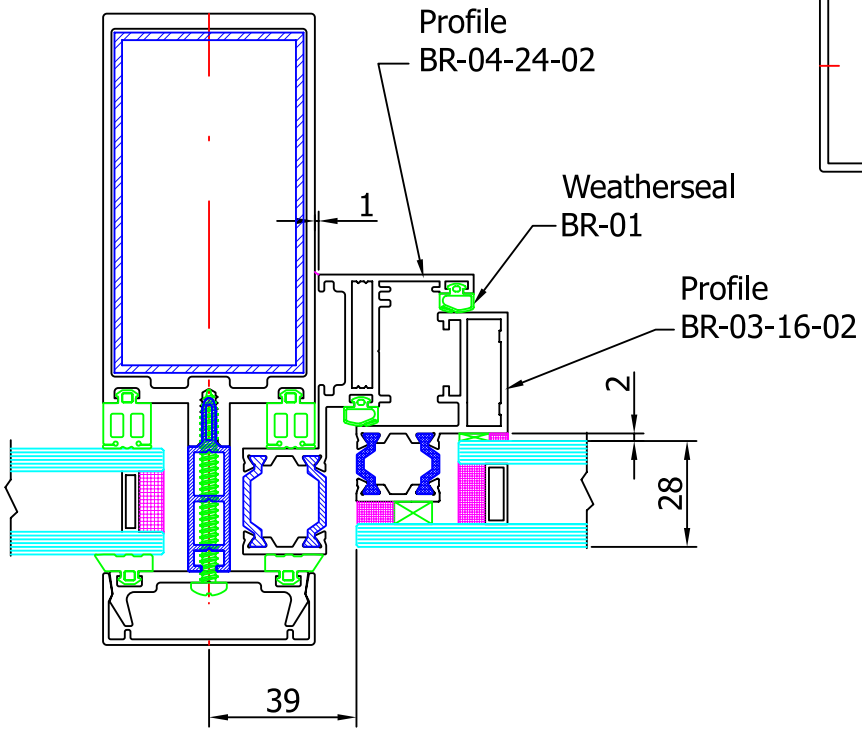

## Section40 - Frameless Opening Shutters

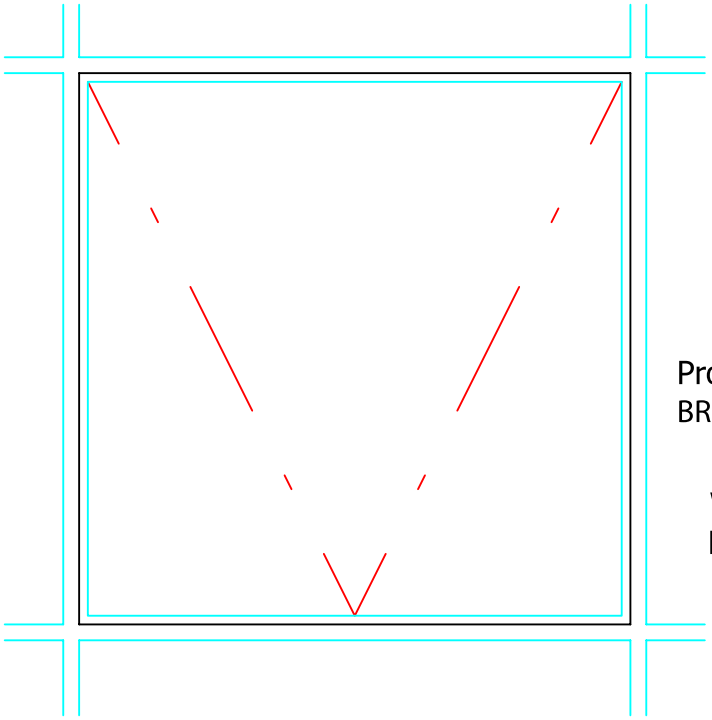

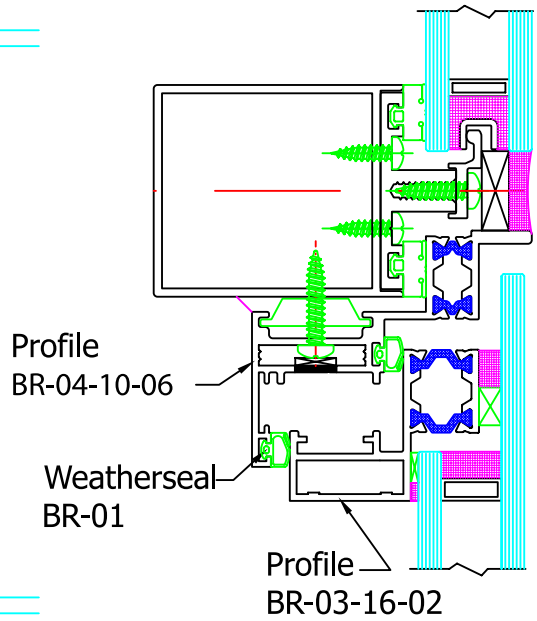


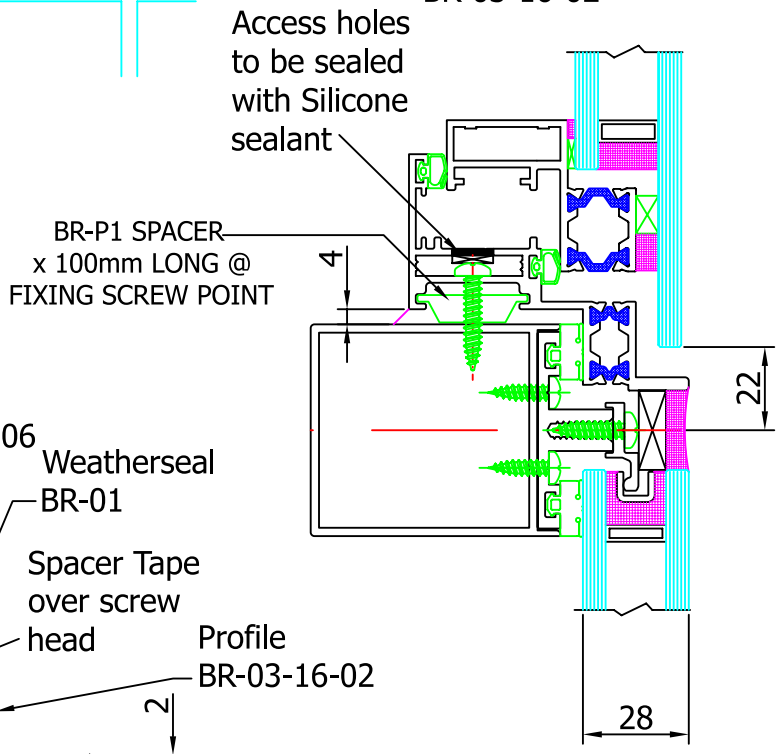


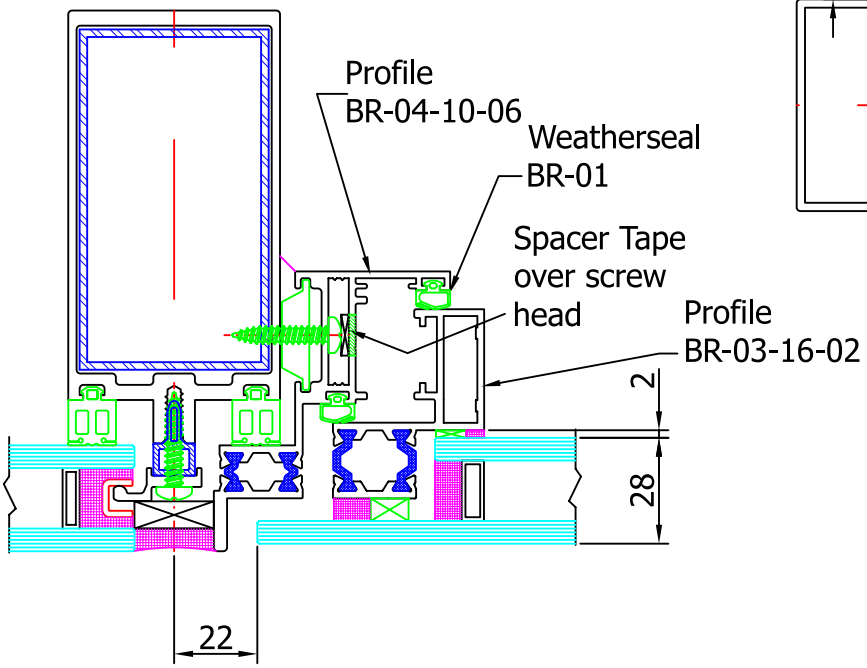

## Section40 - Frameless Opening Shutters

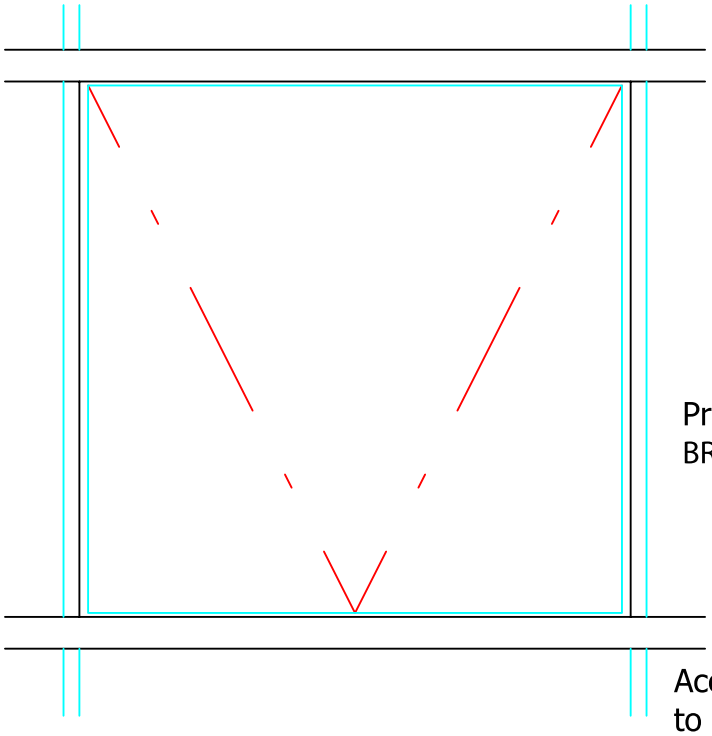

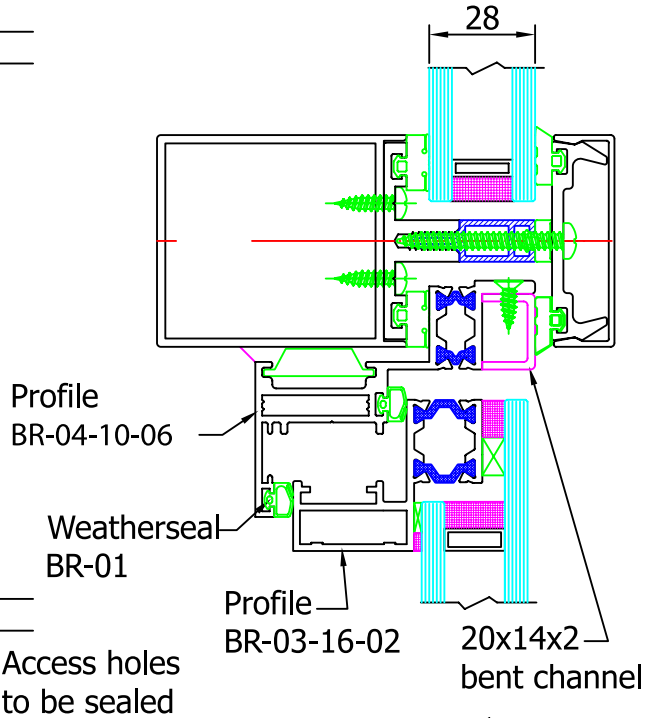


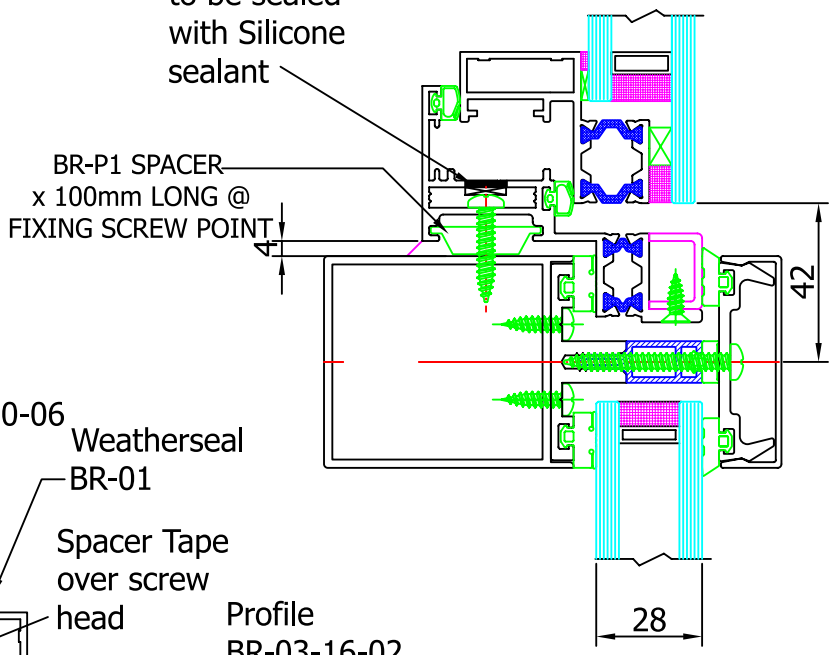


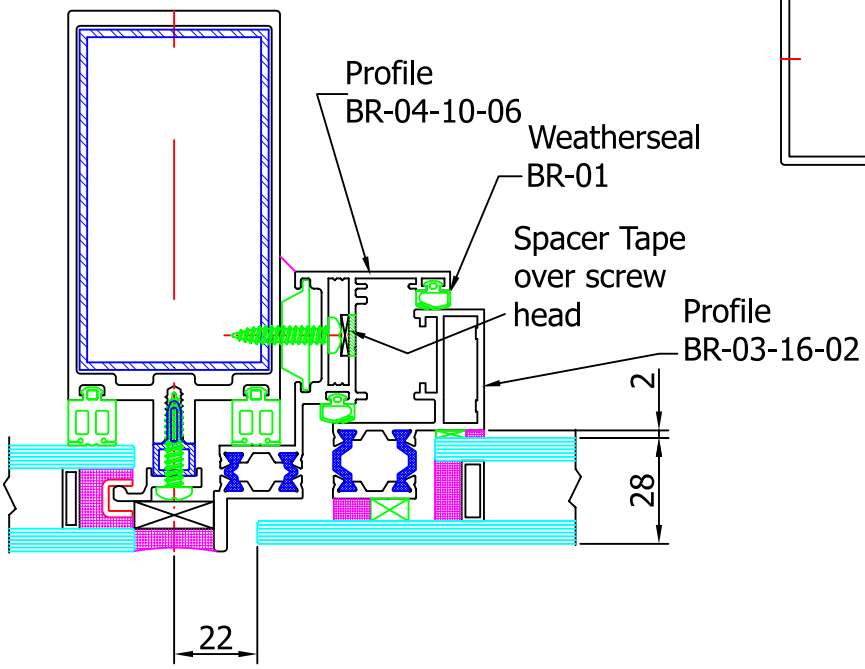

## Section40 - Frameless Opening Shutters

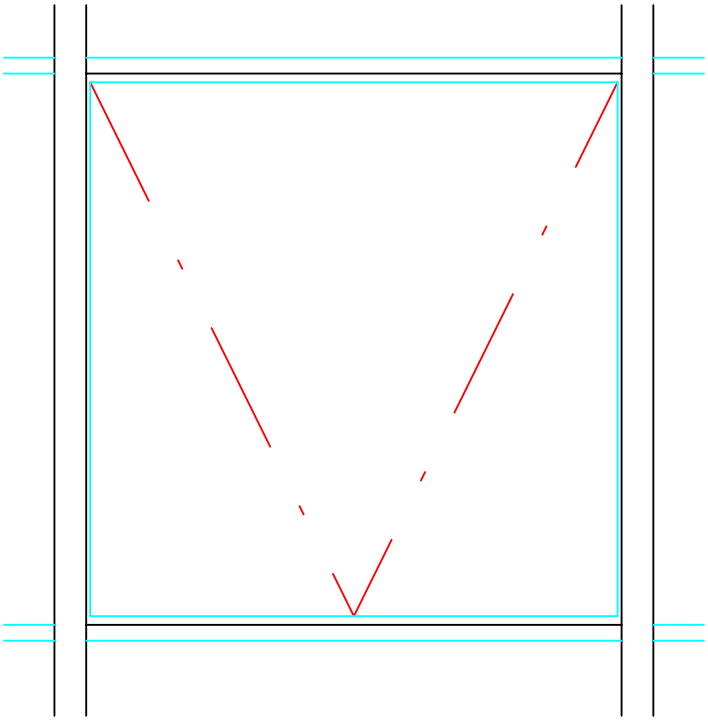

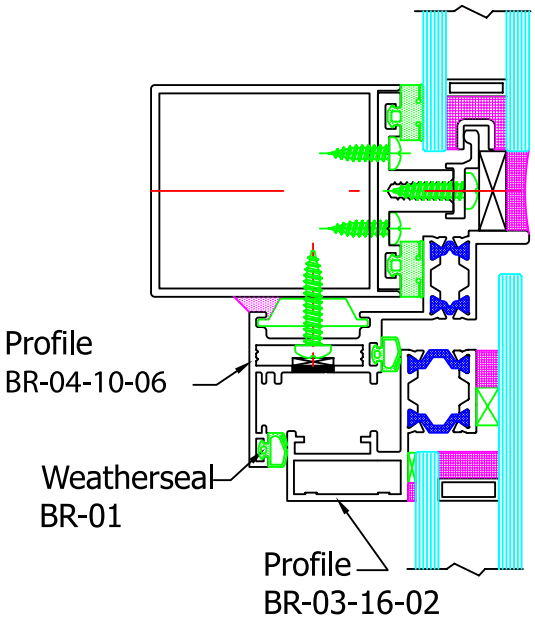


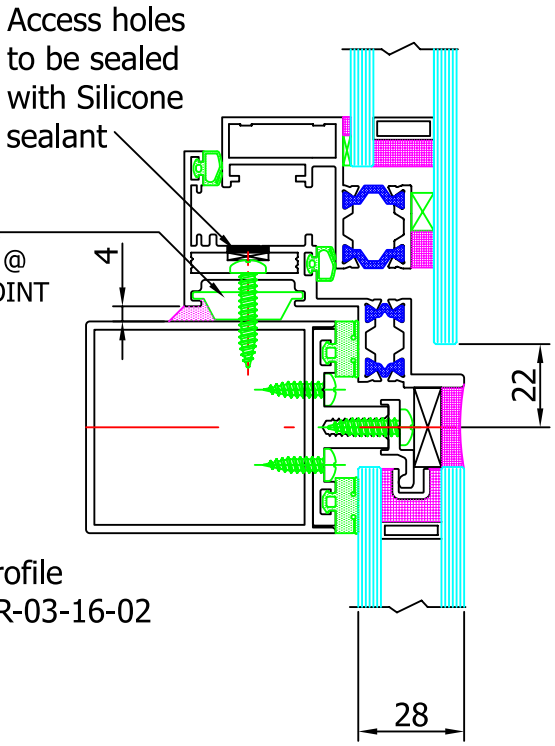


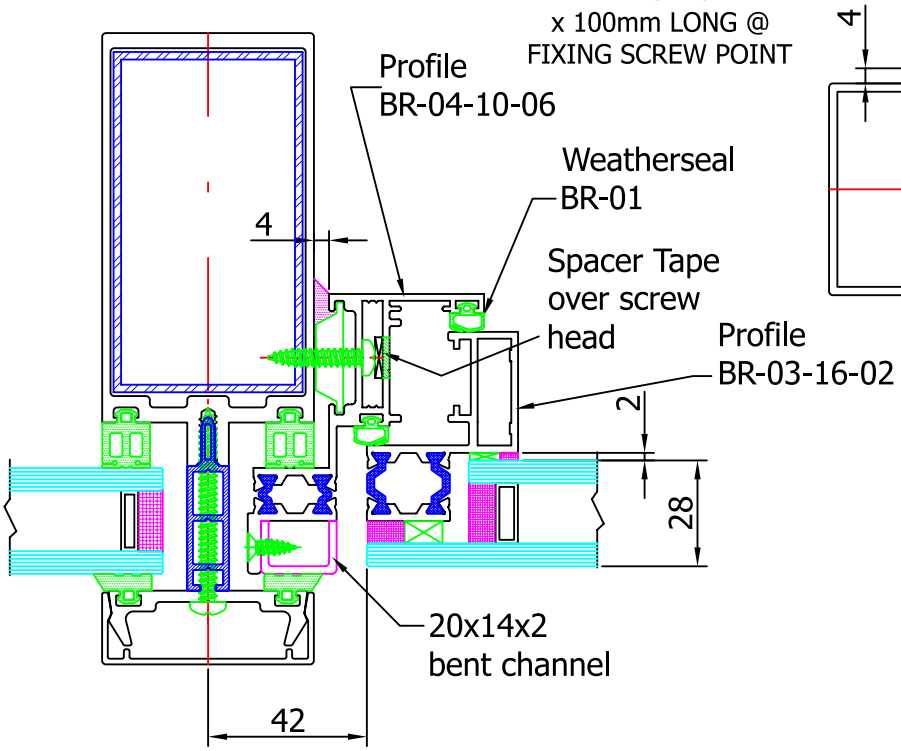

# Section40 - Frameless Opening Shutters

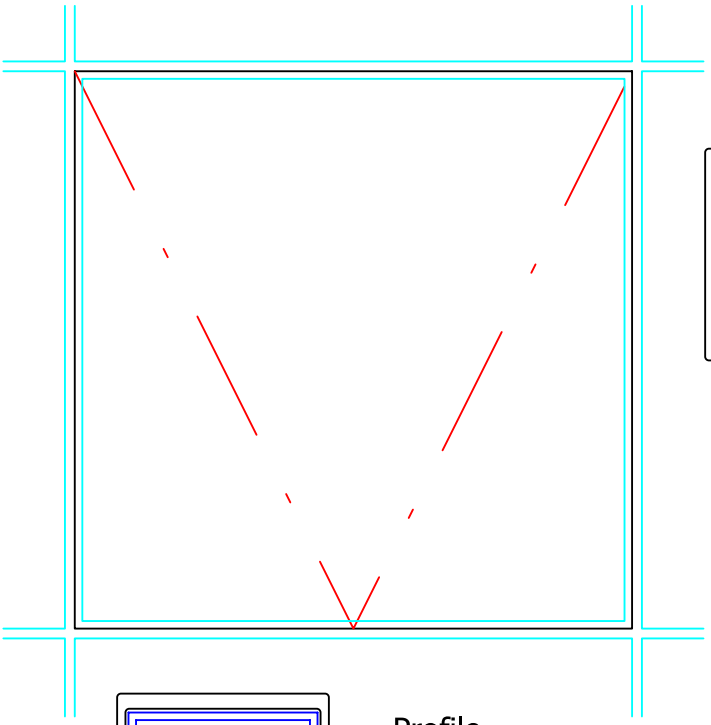

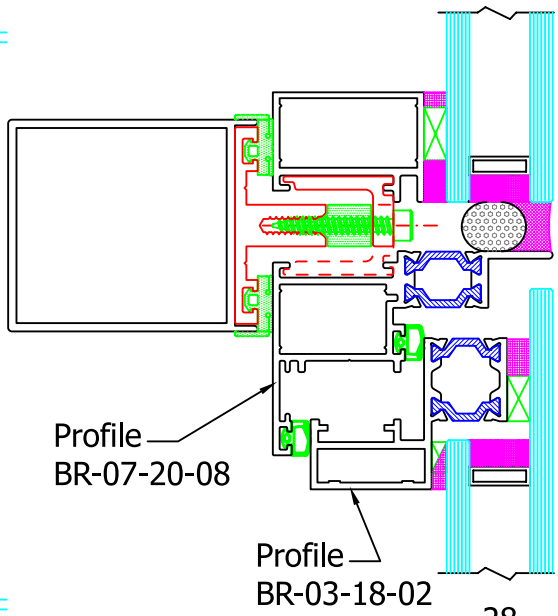


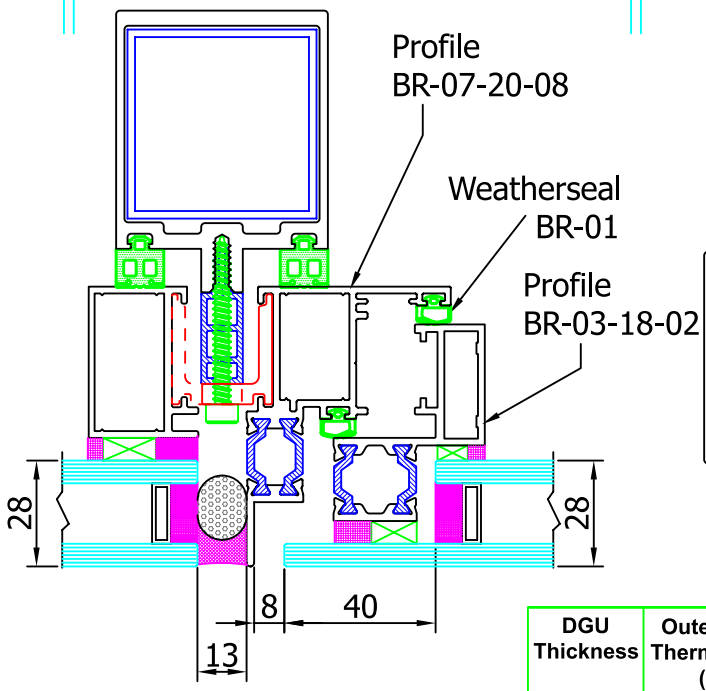


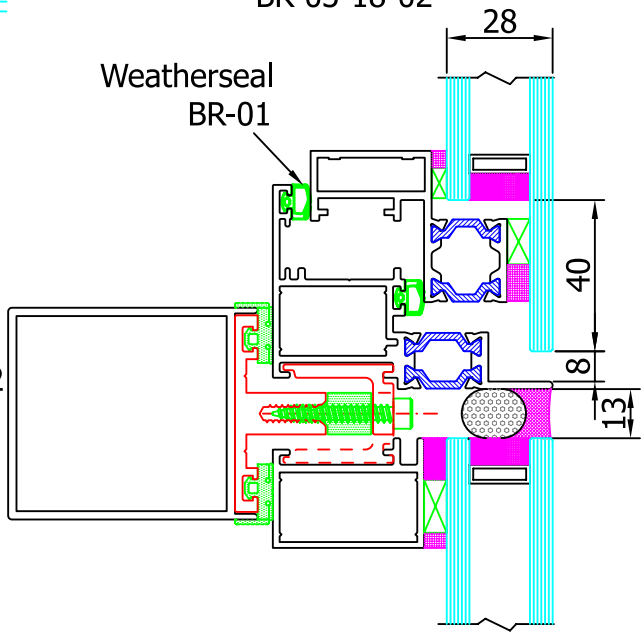


| DGU Thickness | Outer Frame Thermal Break (mm) | Sash Frame Thermal Break (mm) | | |
|---|---|---|---|---|
| | | Outer Pane Thickness | | |
| | | 6 | 8 | 10 |
| 24mm | 16 (219900) | 14 (217100) | N/A | N/A |
| 26mm | 18 (955000) | 16 (219900) | N/A | N/A |
| 28mm | 20 (246500) | 18 (955000) | N/A | N/A |
| 30mm | 22 (413700) | 20 (246500) | 18 (955000) | N/A |
| 32mm | 24 (235100) | 22 (413700) | 20 (246500) | 18 (955000) |

## Section40 - Frameless Opening Shutters

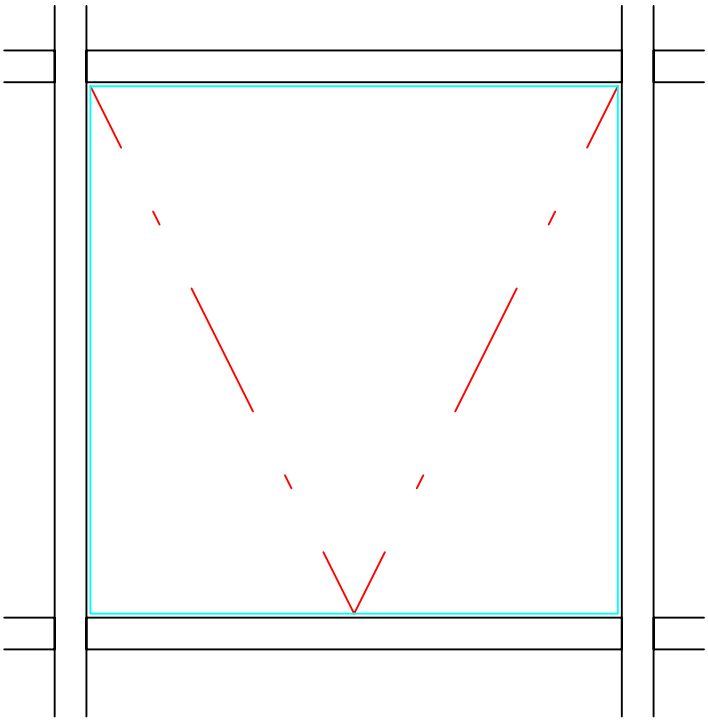

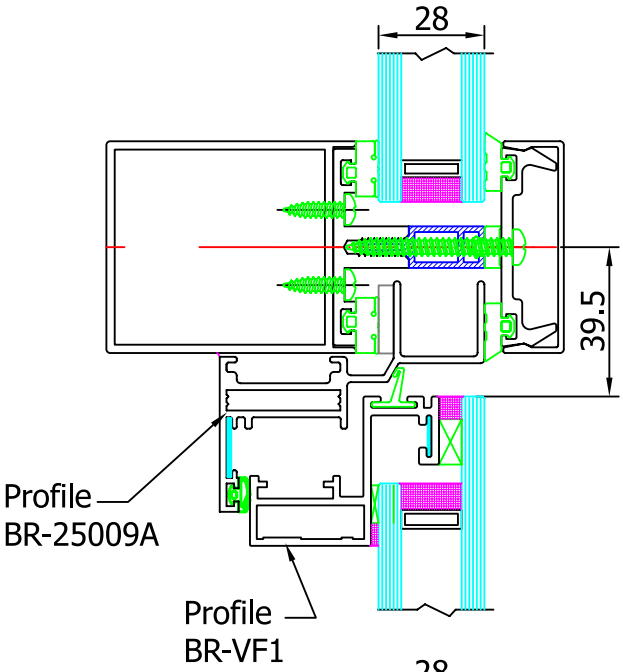


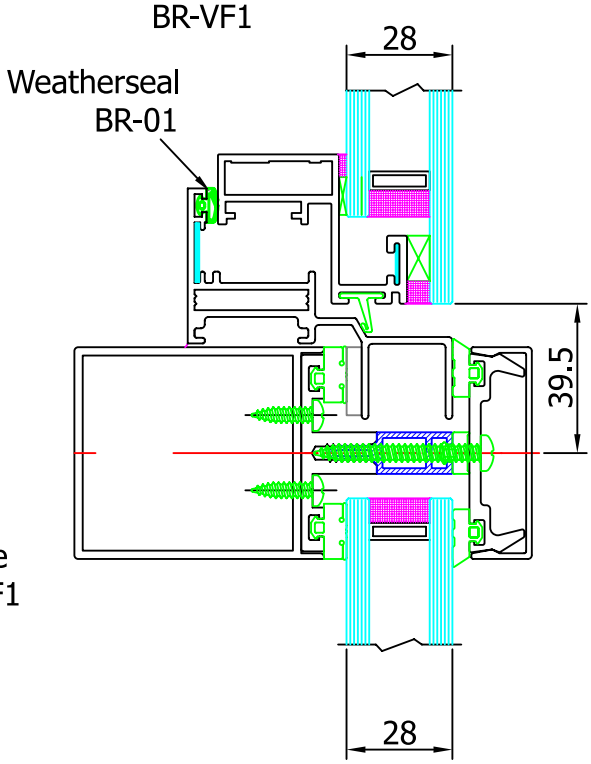


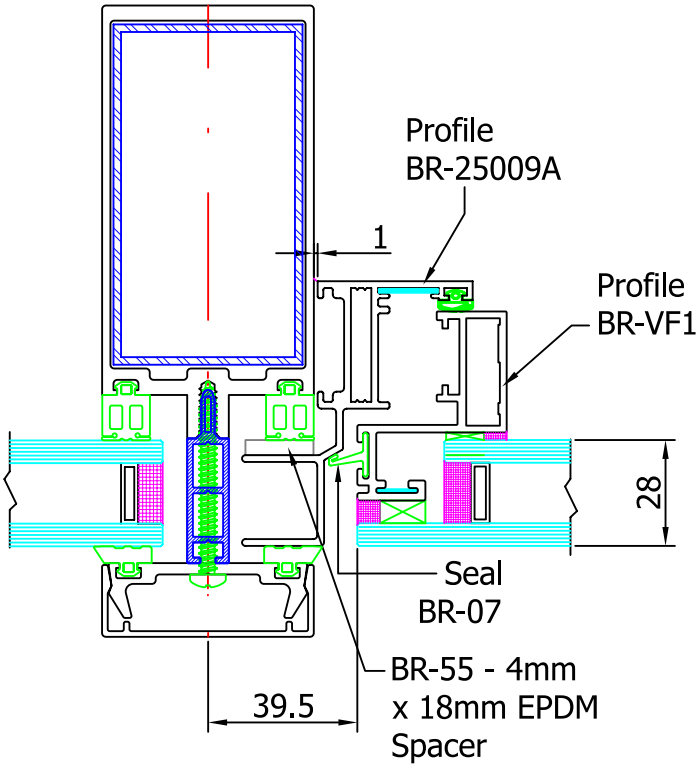

## Section40 - Frameless Opening Shutters

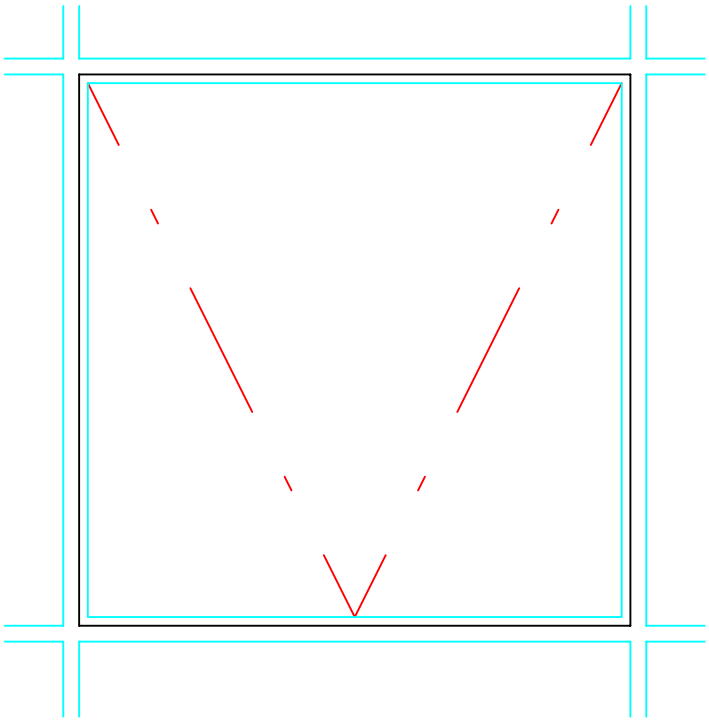

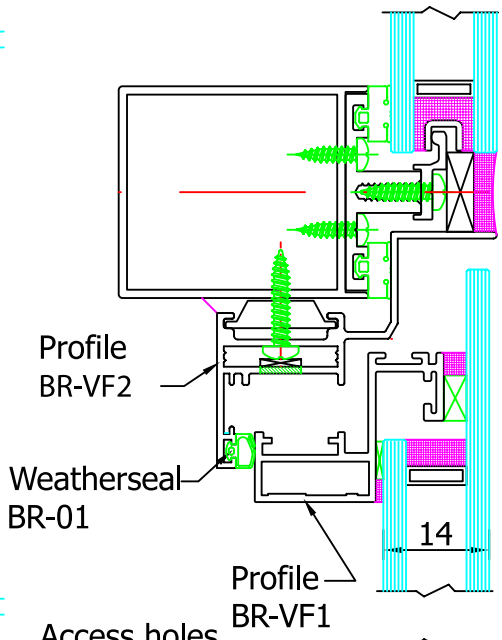


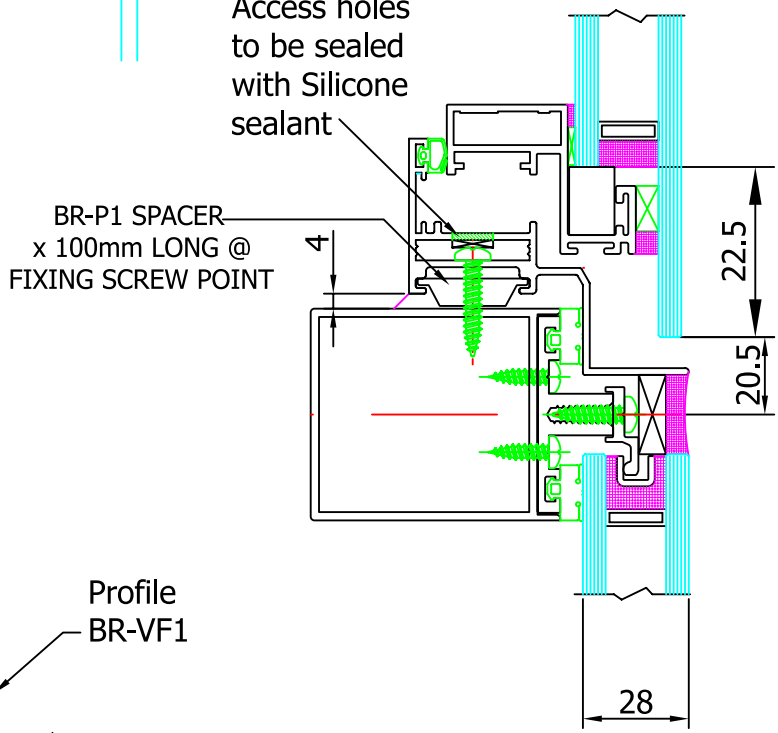


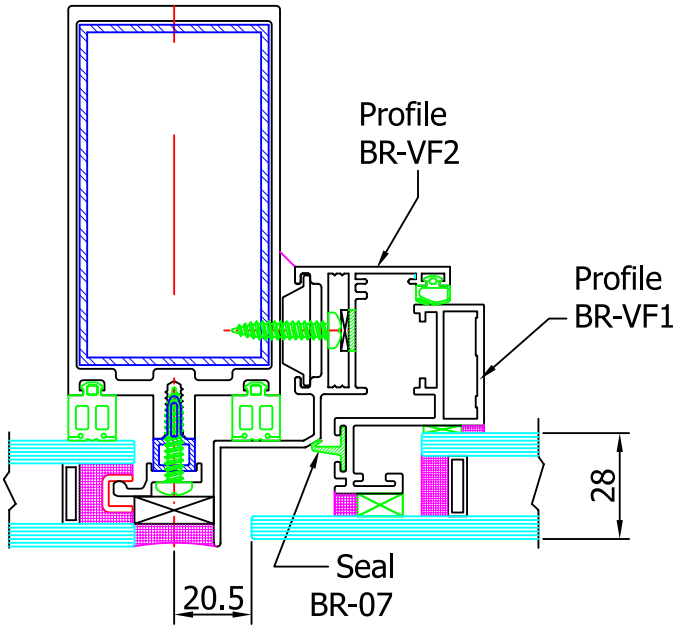

## Section40 - Frameless Opening Shutters

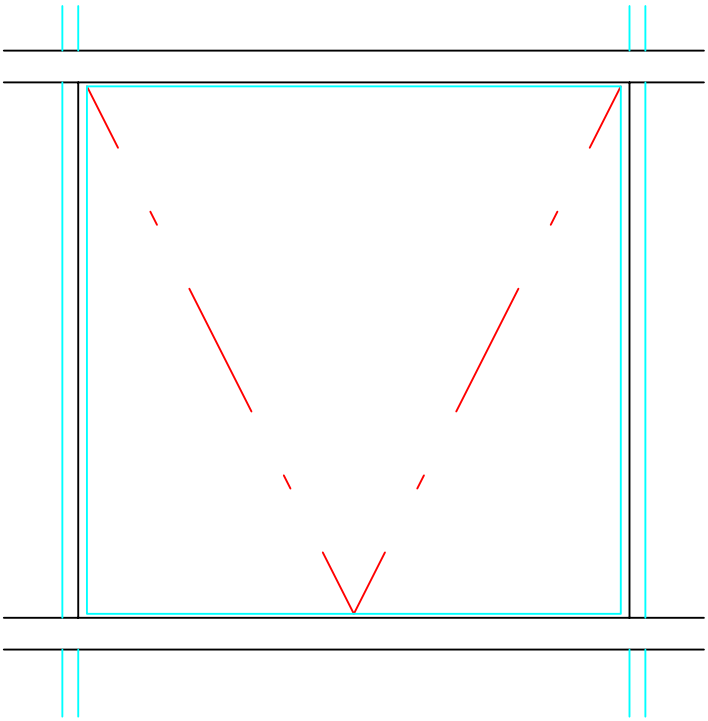

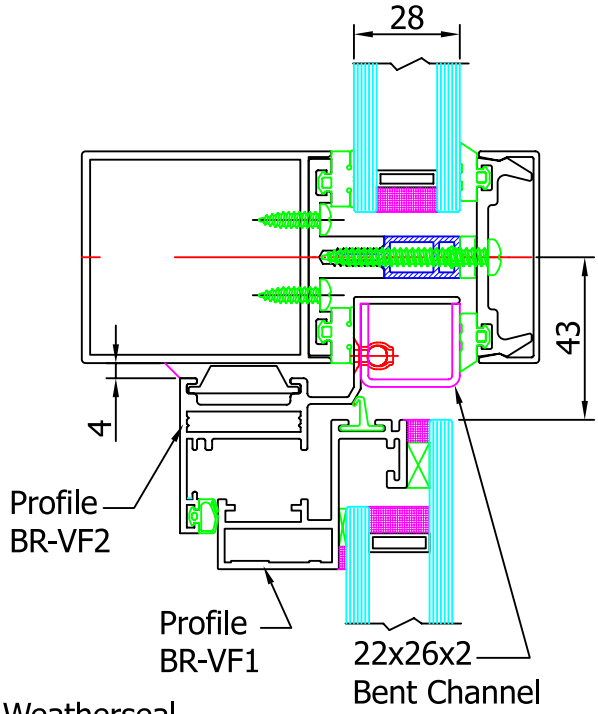


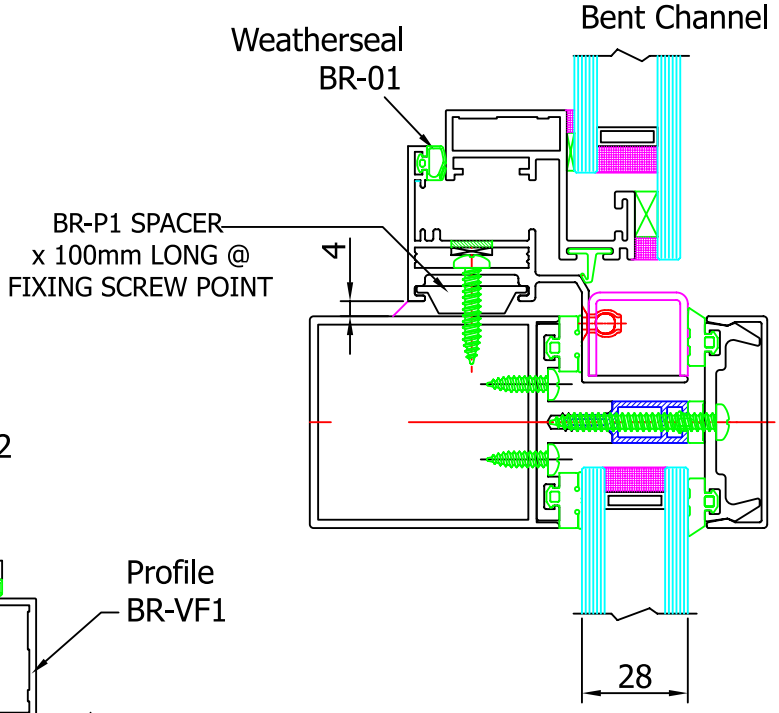


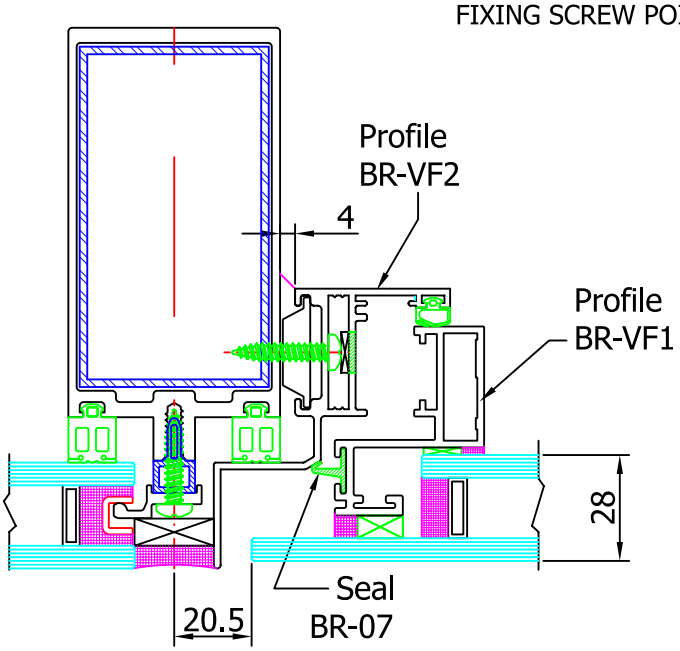

## Section40 - Frameless Opening Shutters

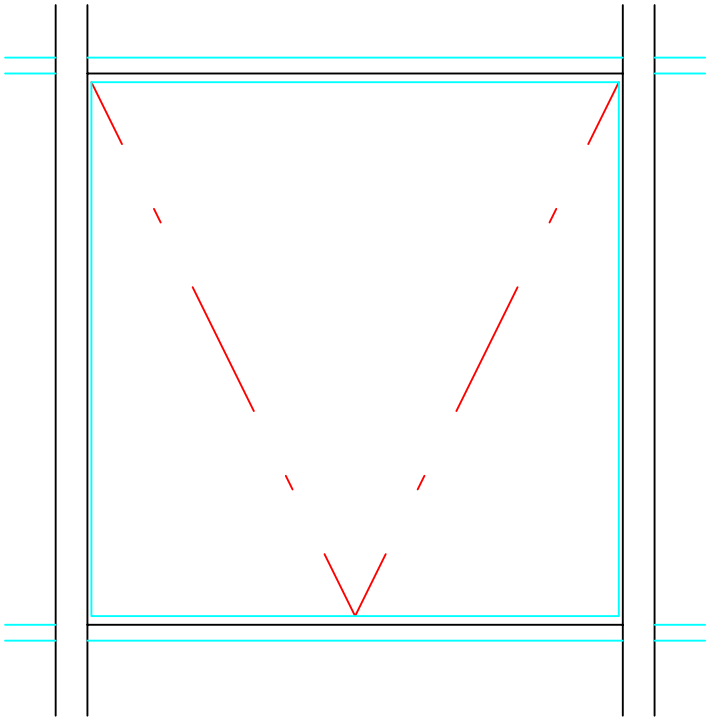

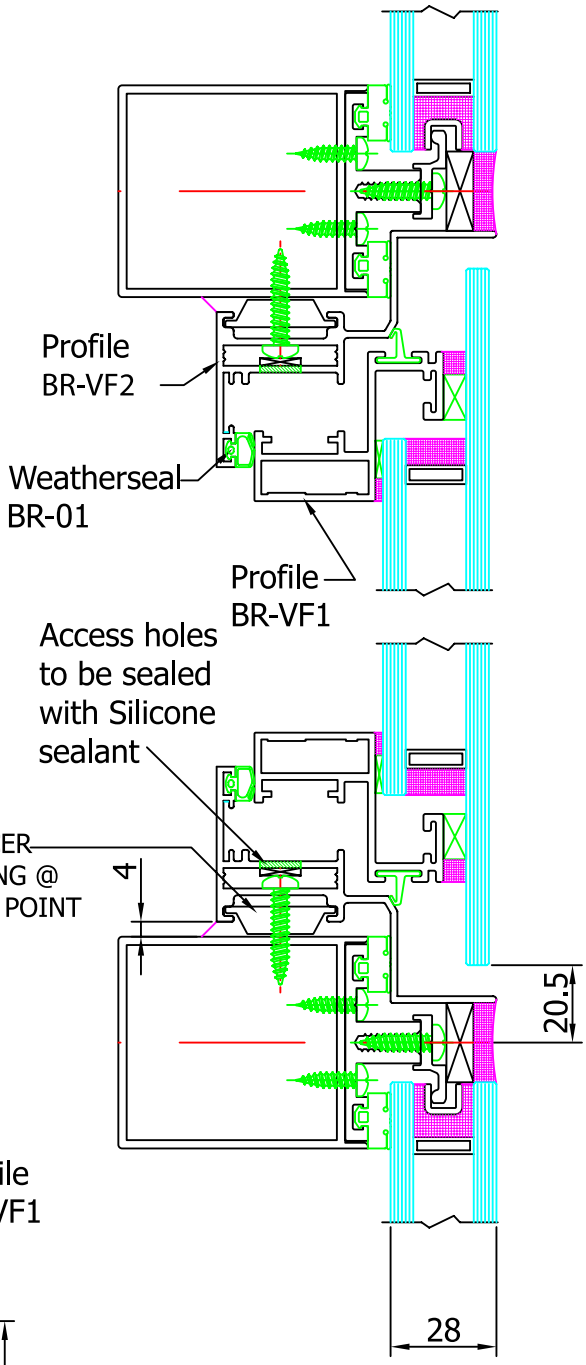


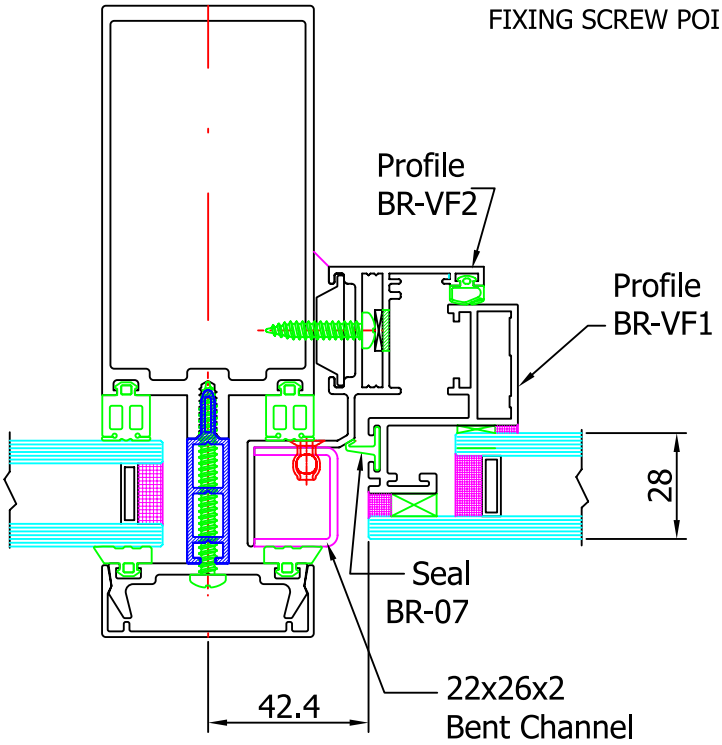

## Section40 - Frameless Opening Shutters

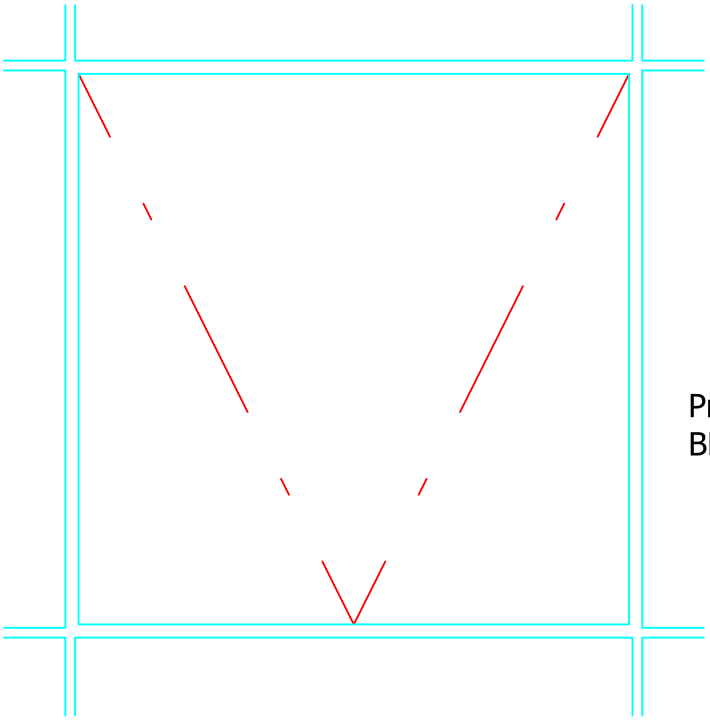

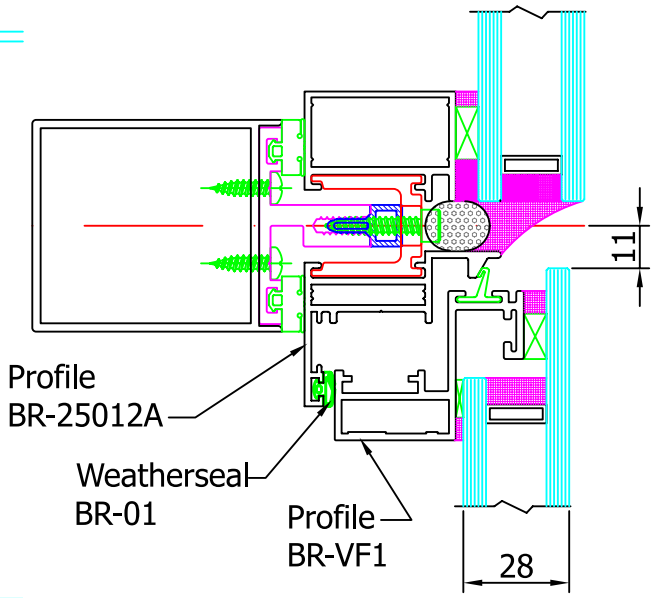


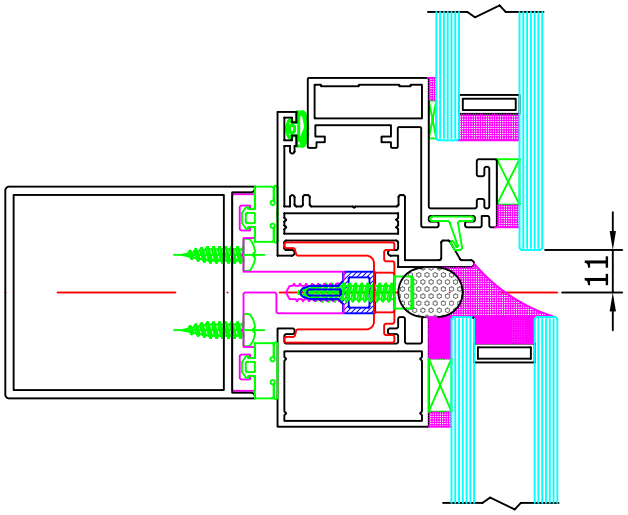


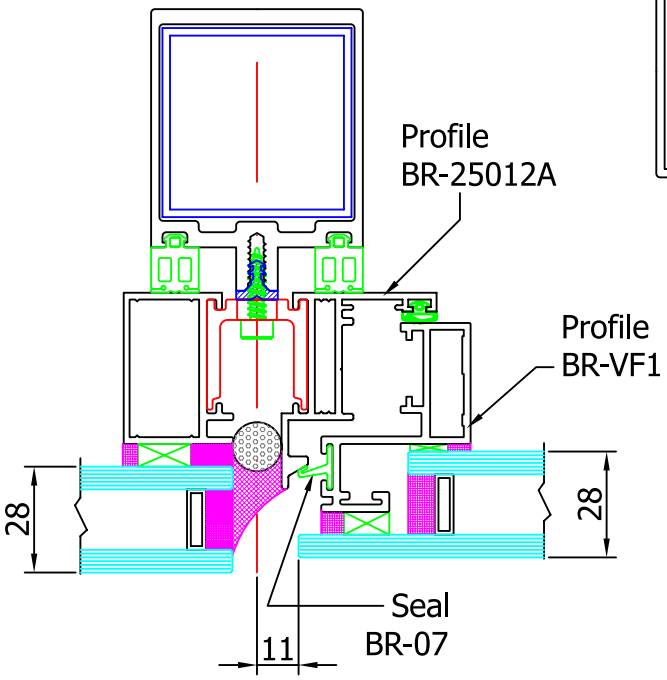

## Section40 - Frameless Opening Shutters

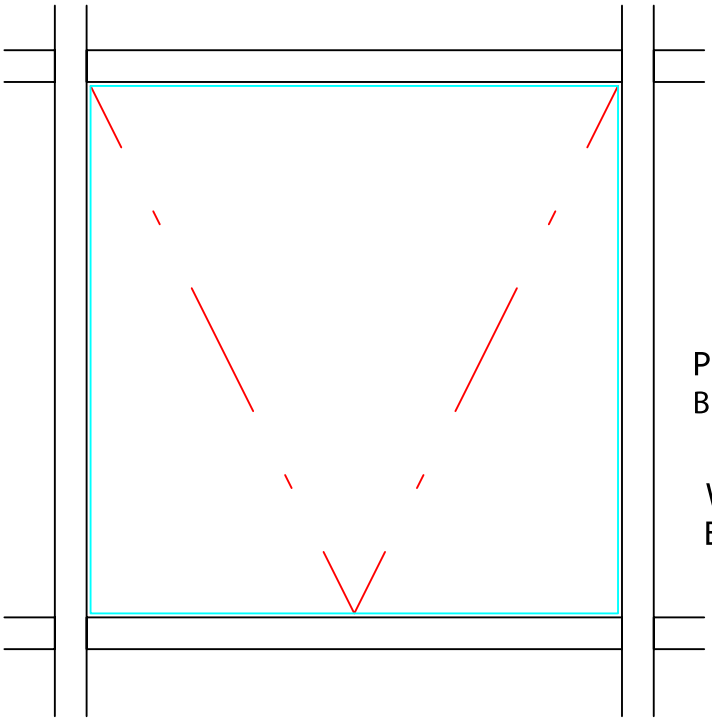

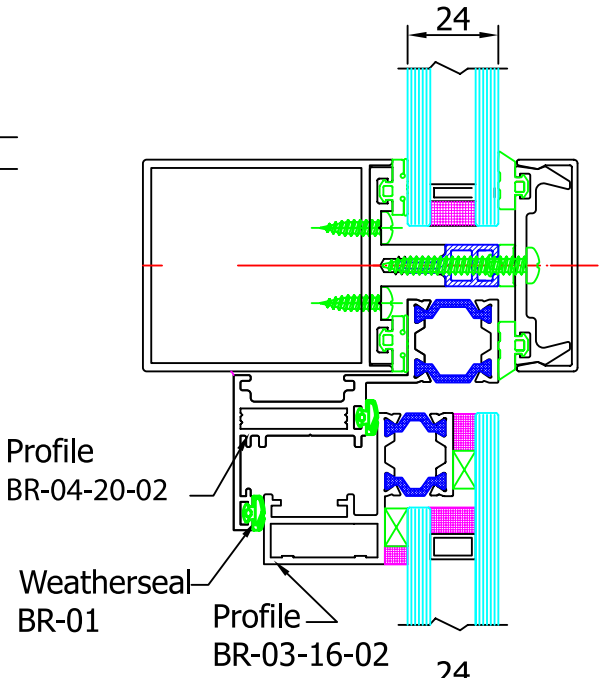


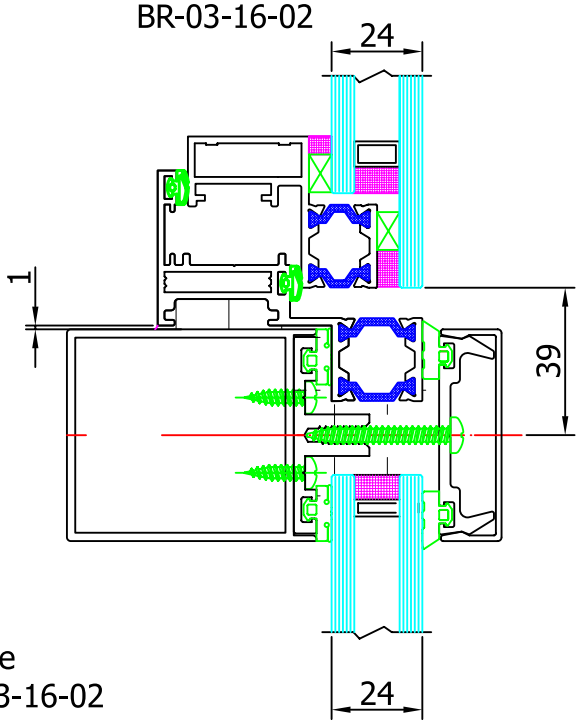


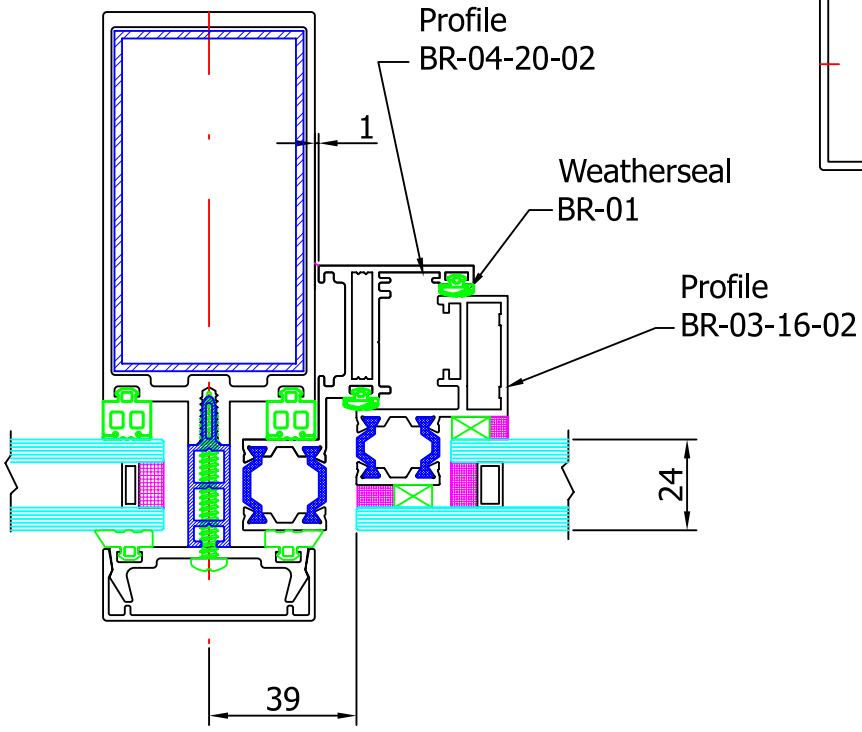

## Section40 - Frameless Opening Shutters

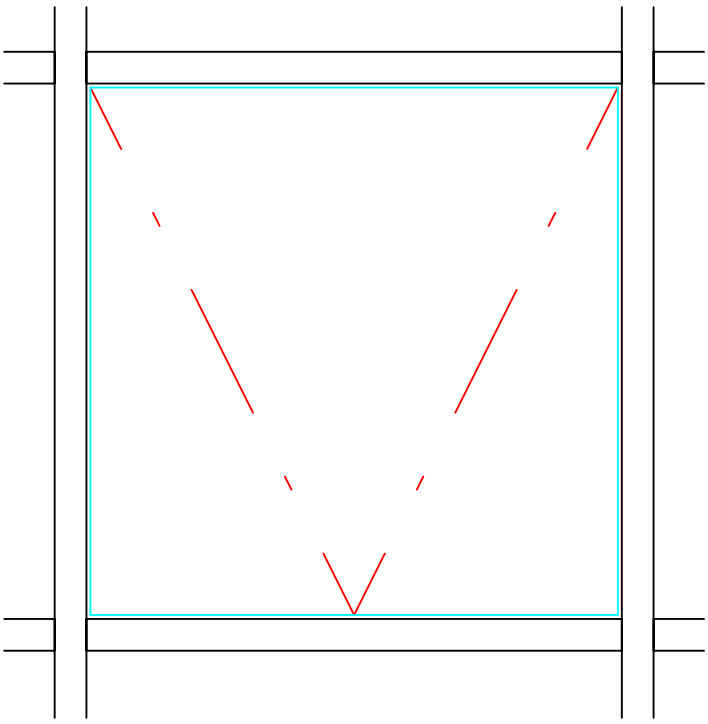

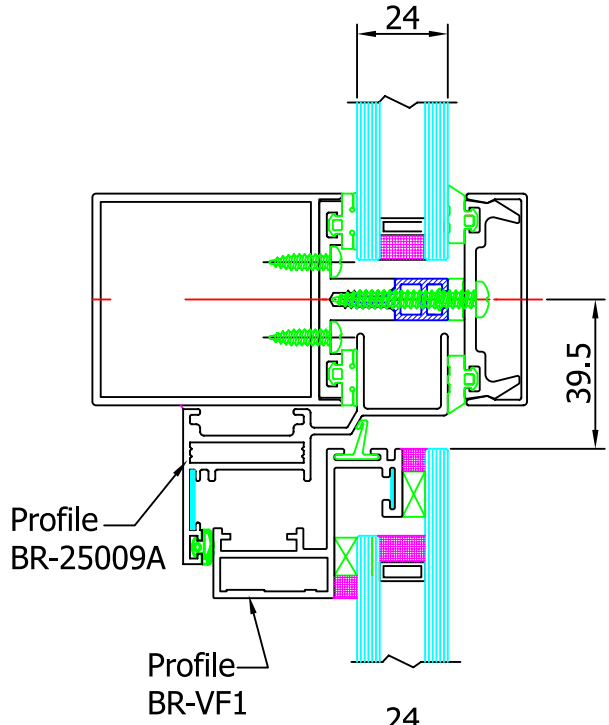


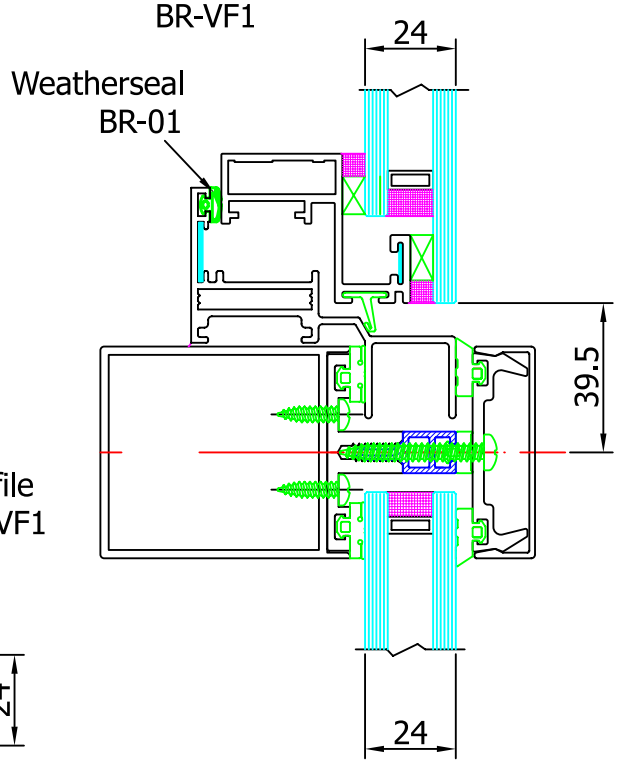


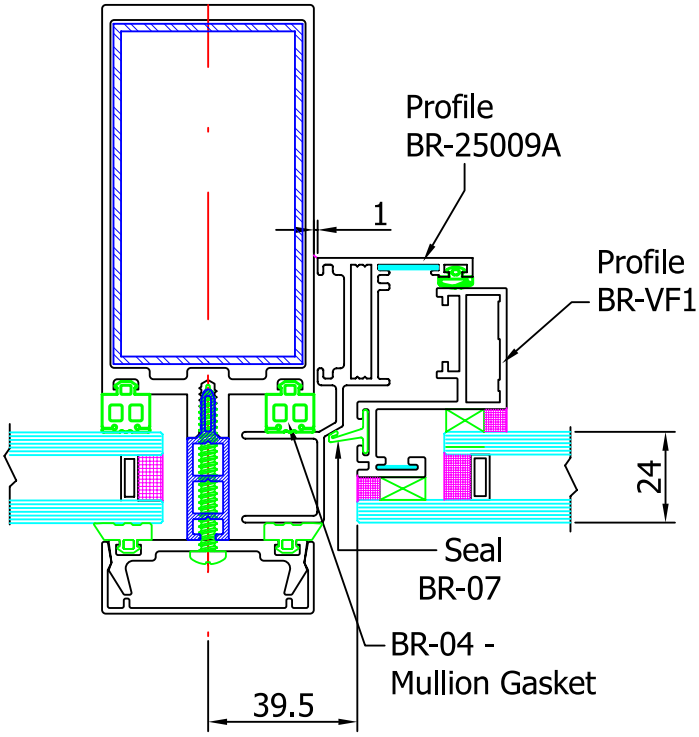

## Section40 - Frameless Opening Shutters

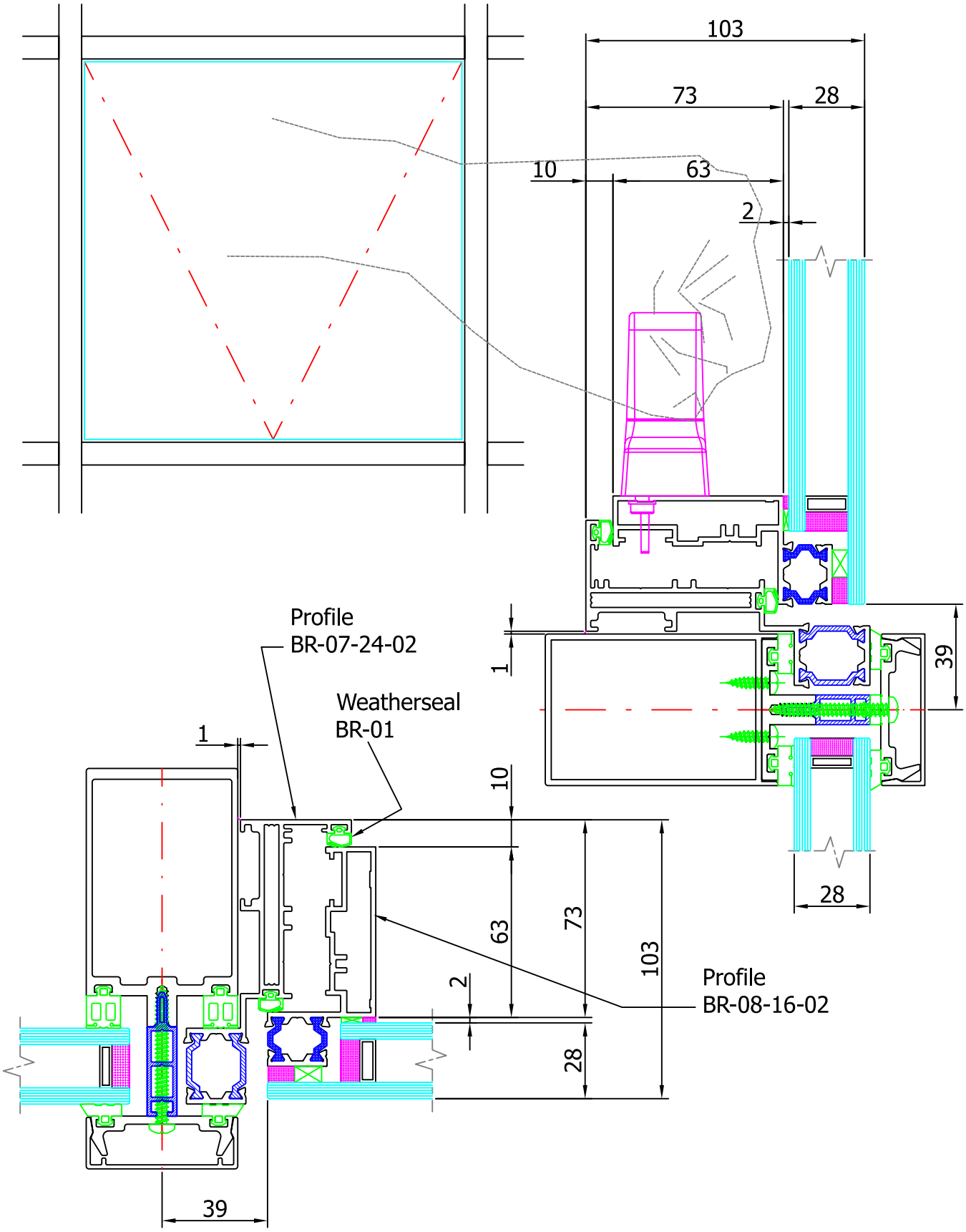

## Section40 - Frameless Opening Shutters

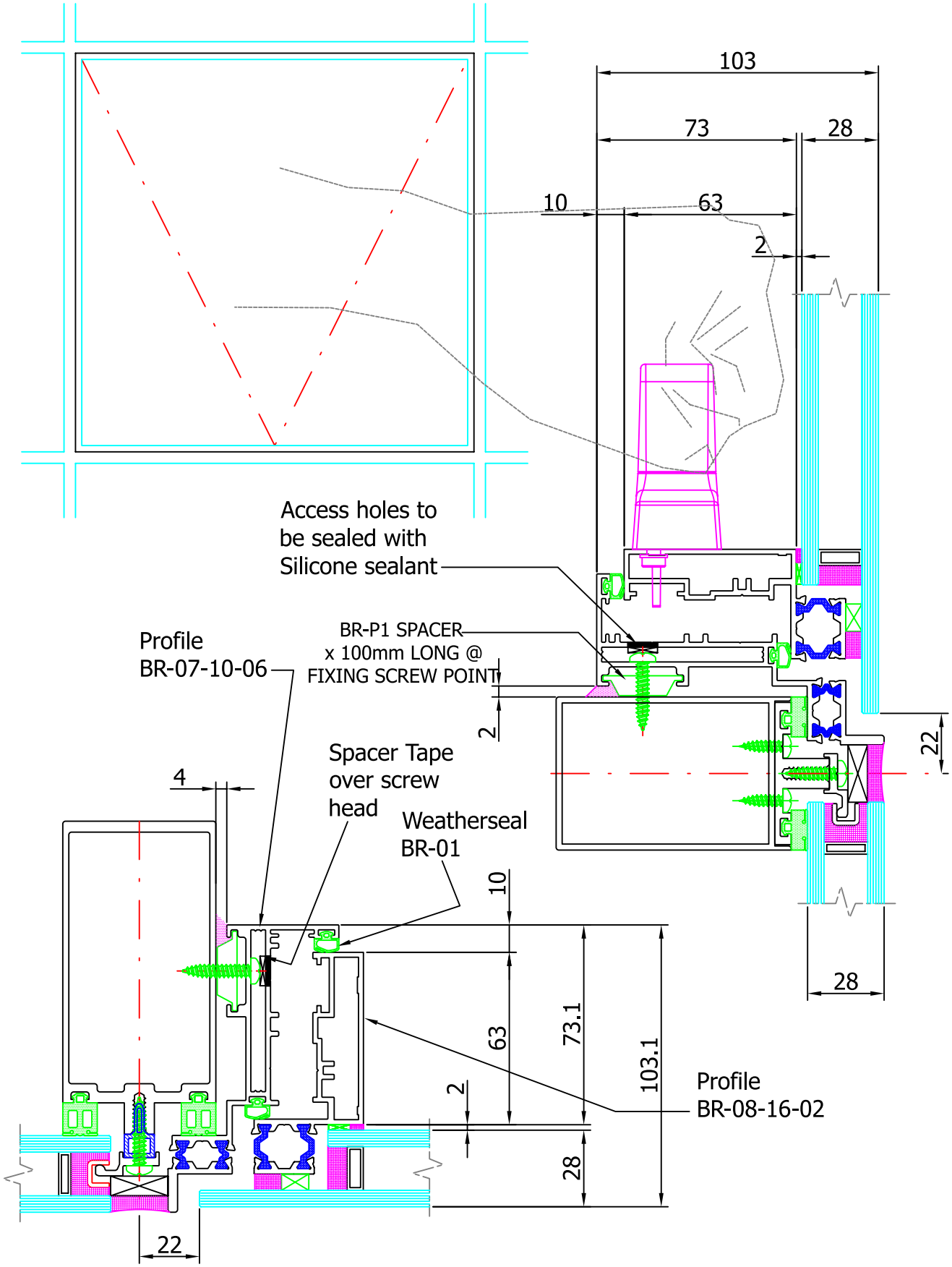

## Section40 - Frameless Opening Shutters

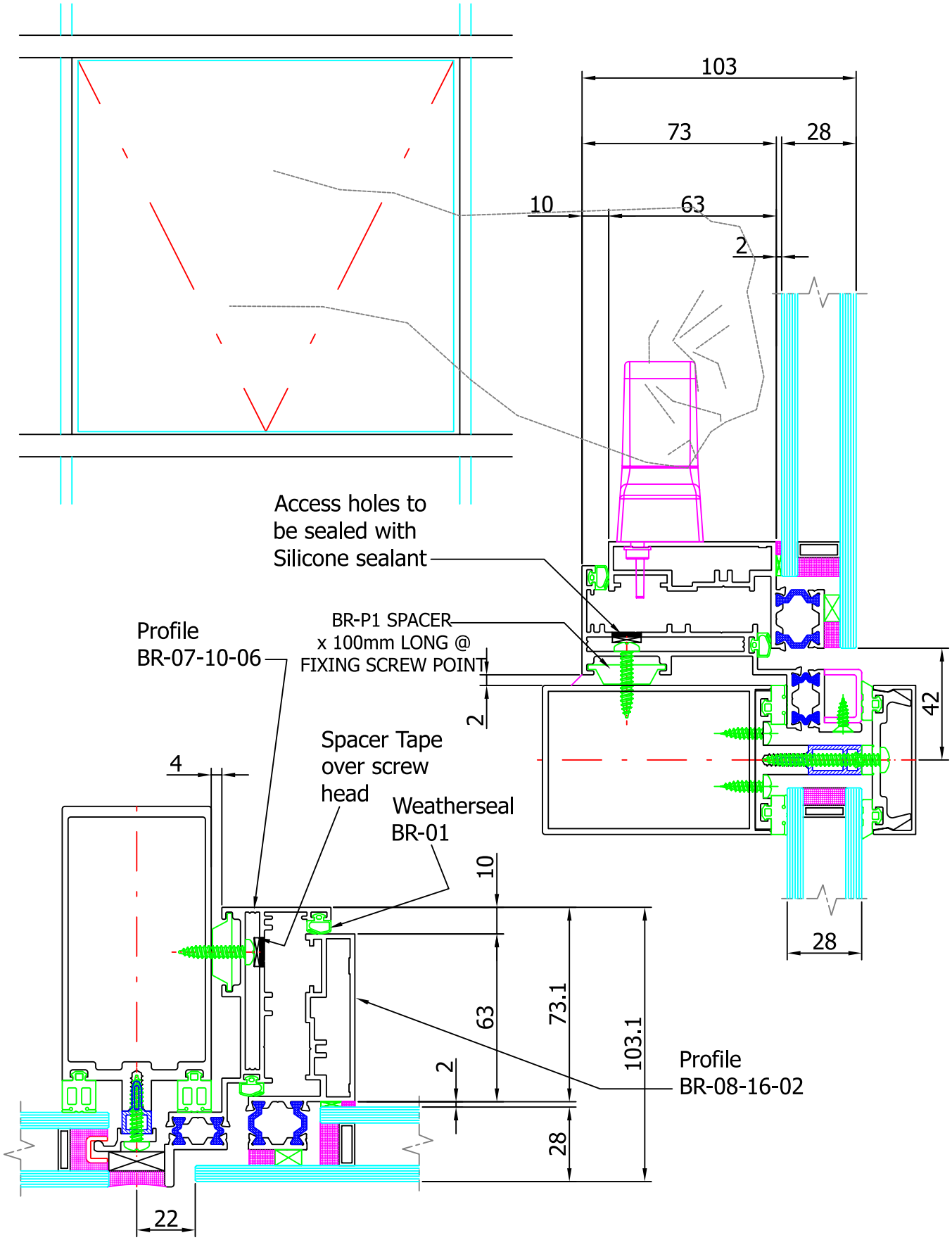

## Section40 - Frameless Opening Shutters

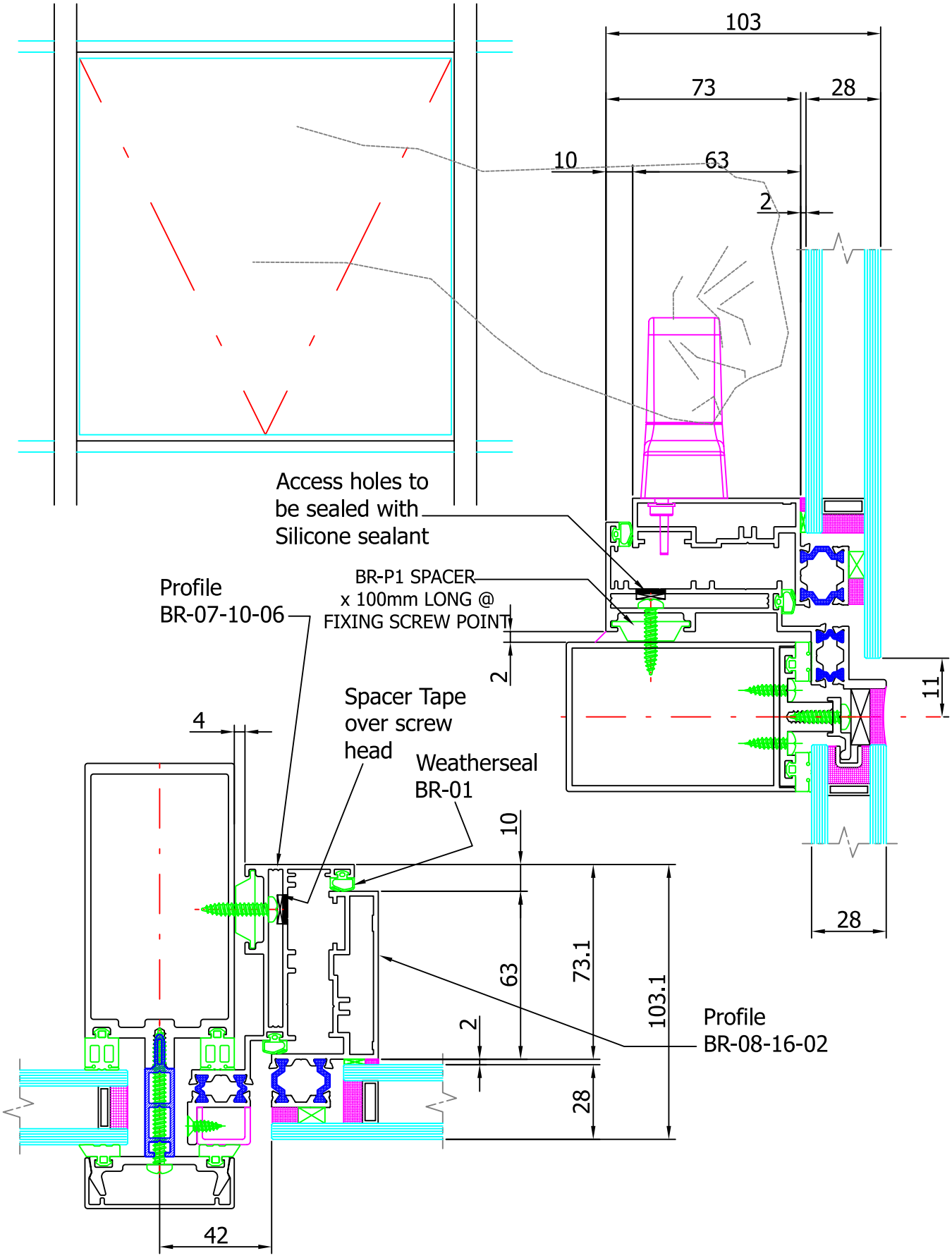

BRITAL

ALUMINIUM SYSTEMS DESIGN

## Section41 - Frameless Opening Shutters

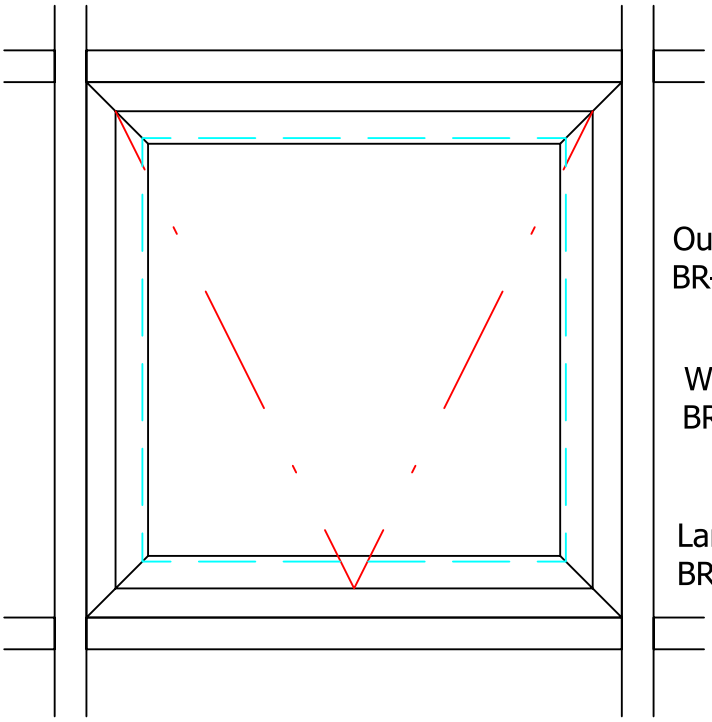

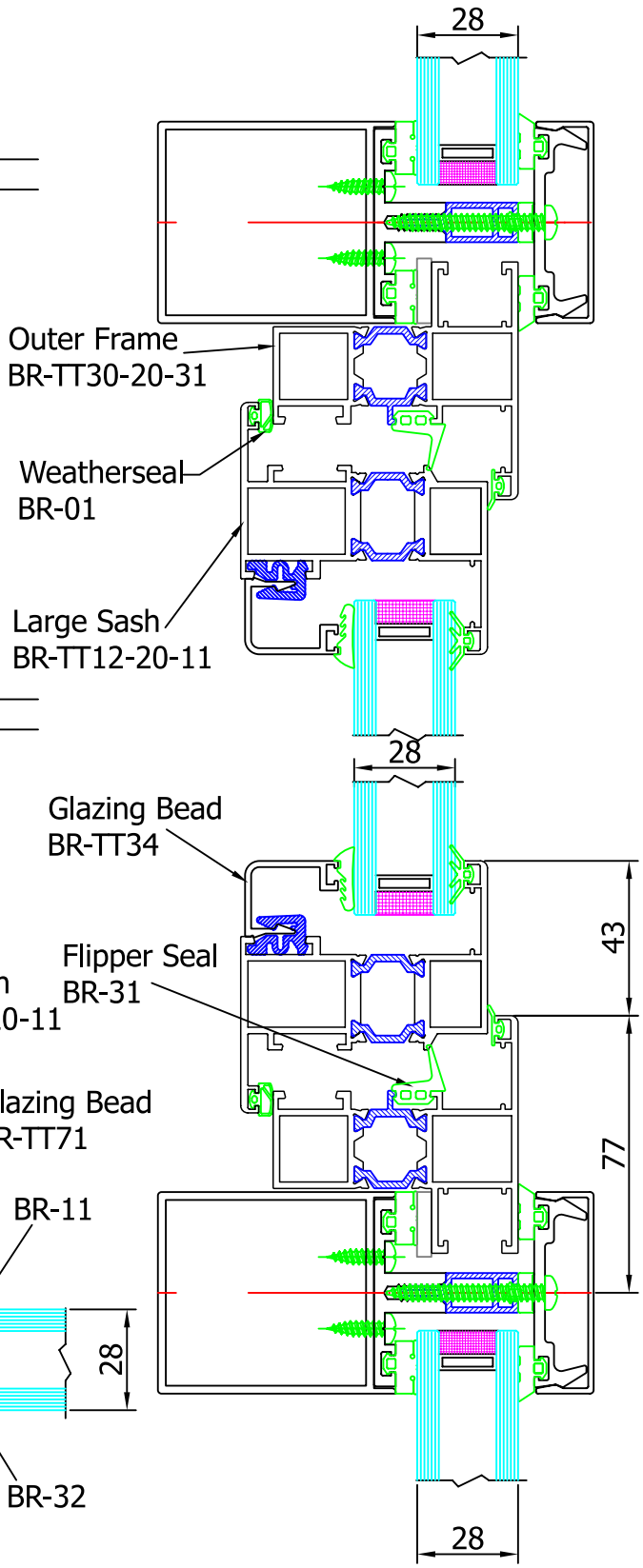


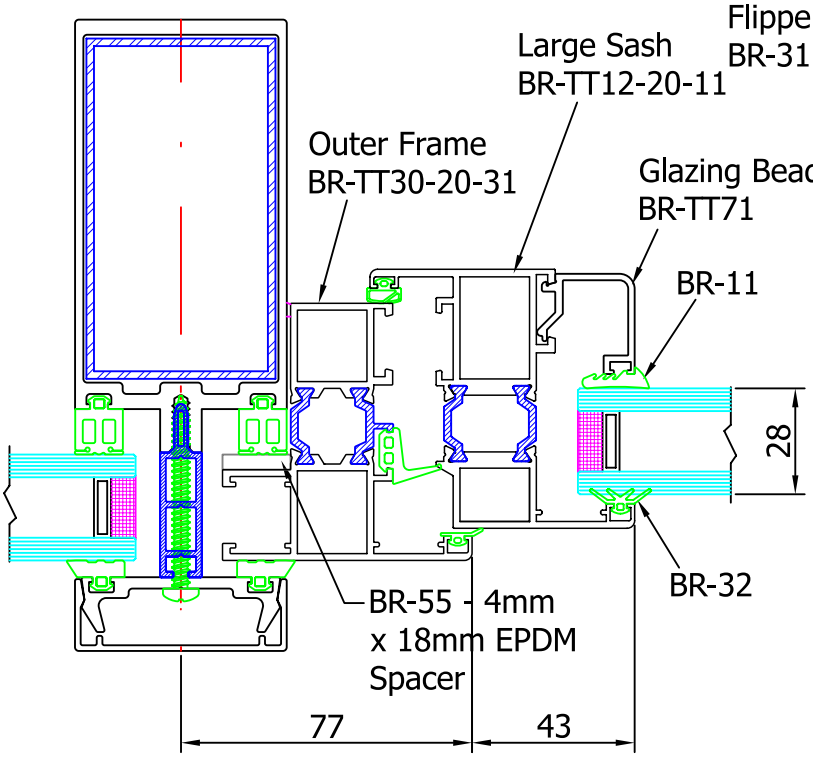

## Section41 - Frameless Opening Shutters

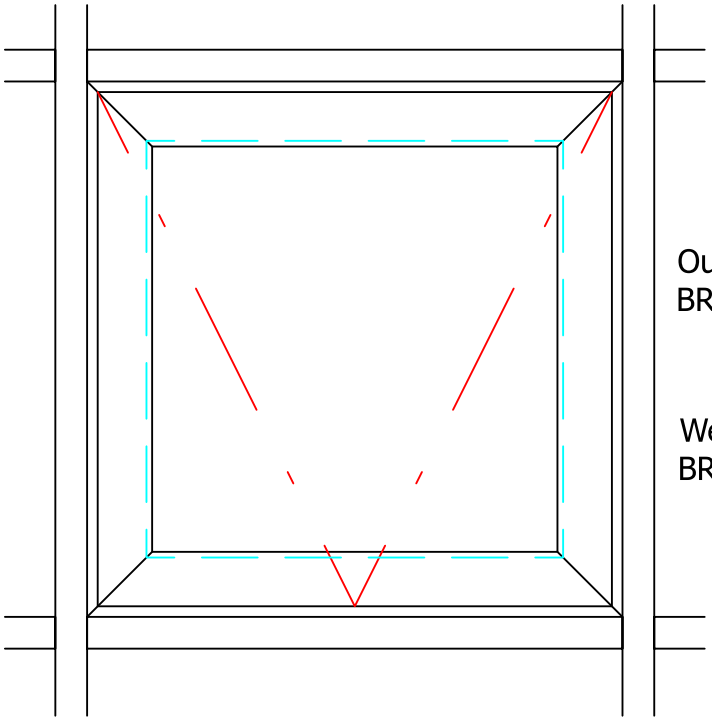

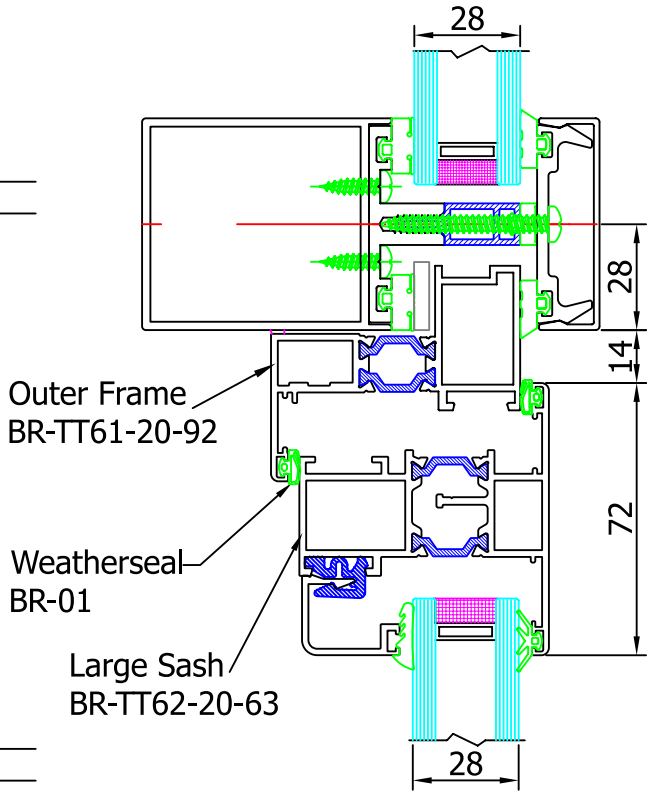


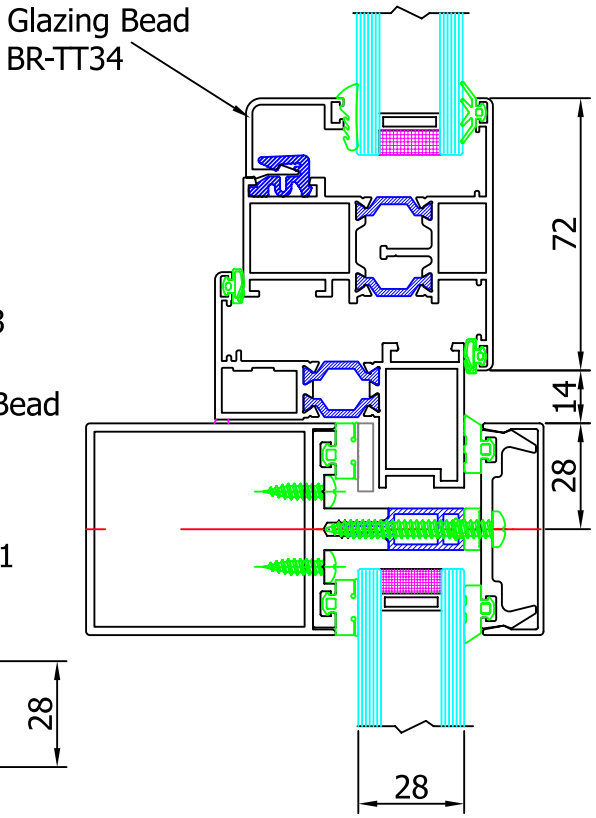


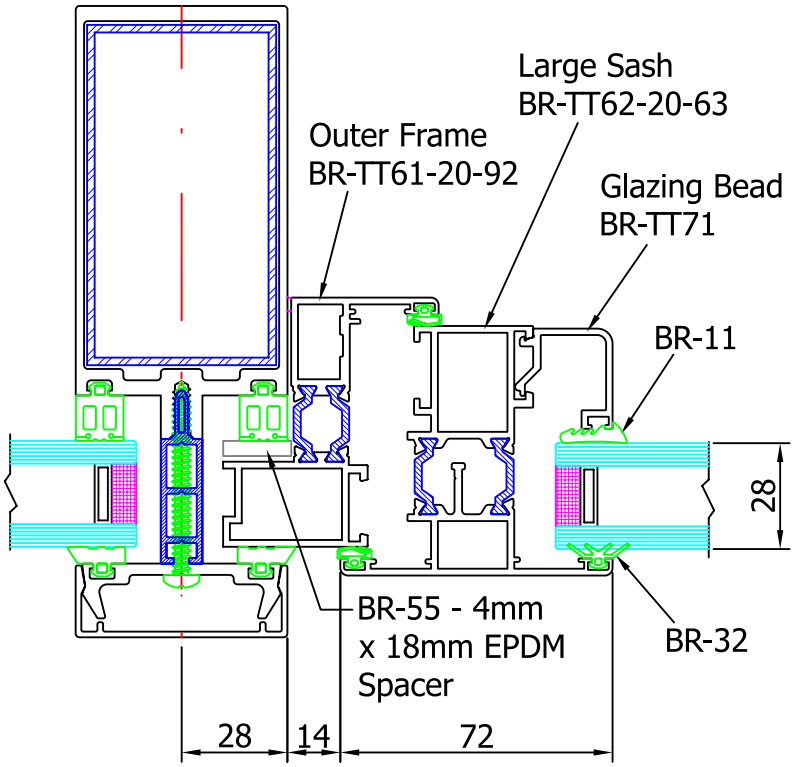

## Section41 - Frameless Opening Shutters

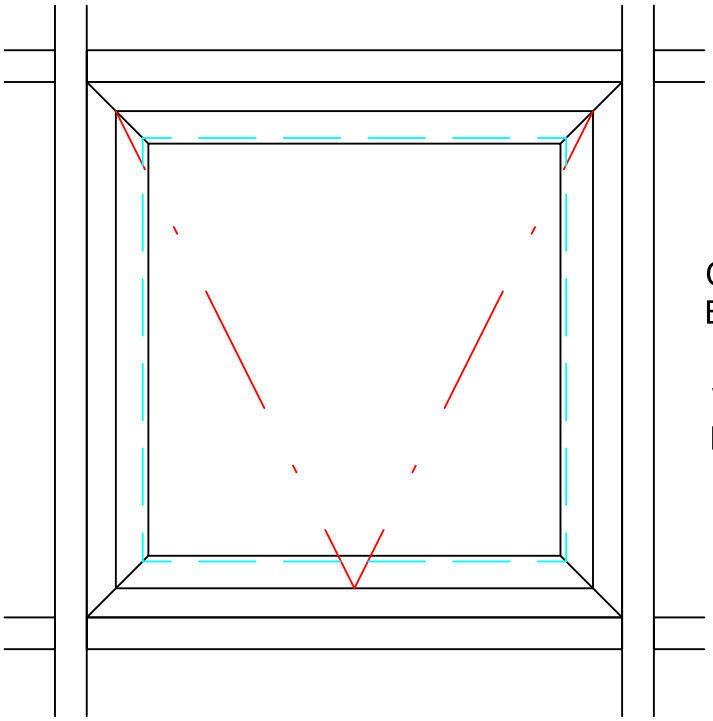

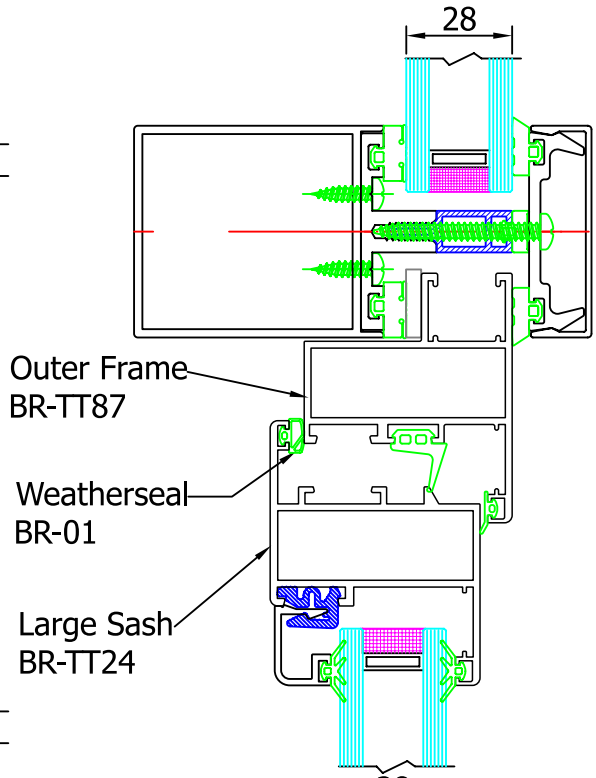


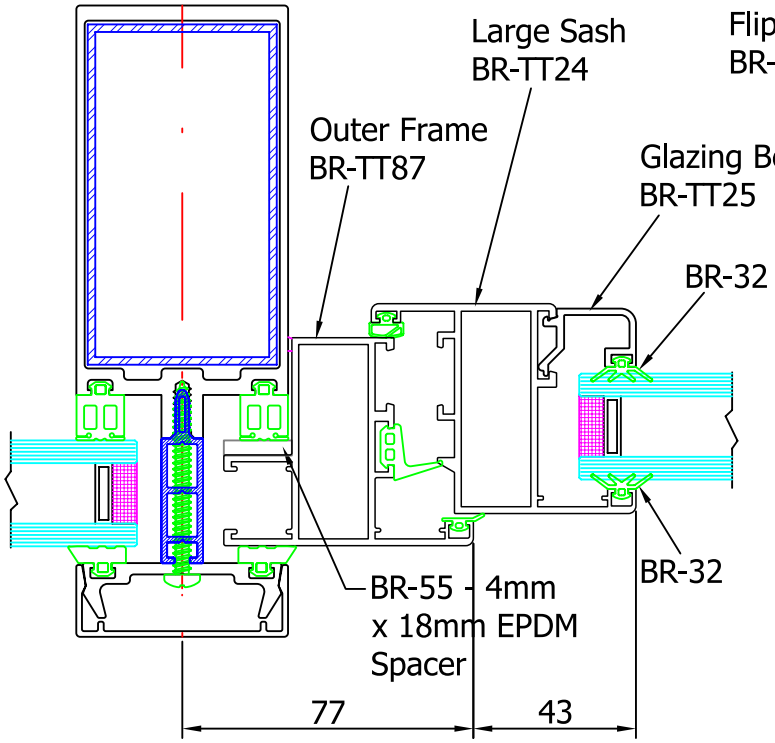


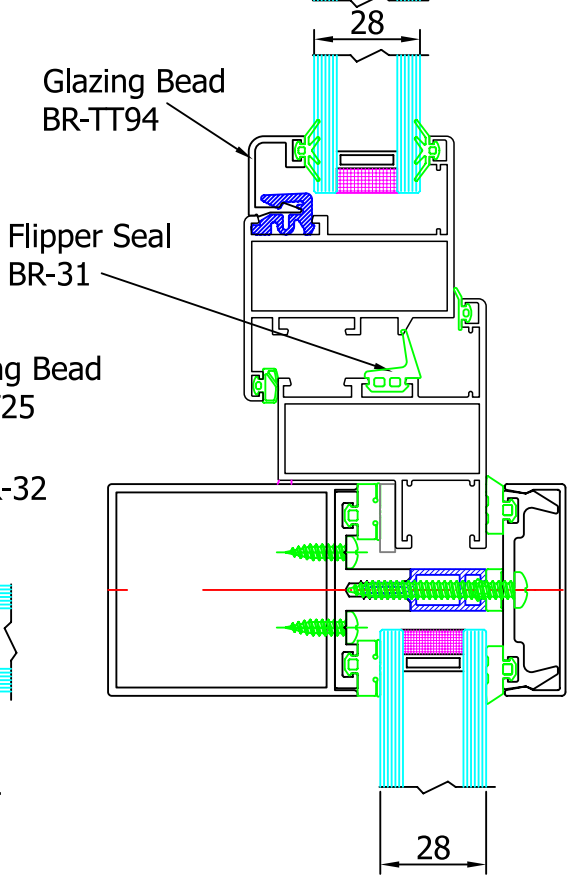

## Section41 - Frameless Opening Shutters

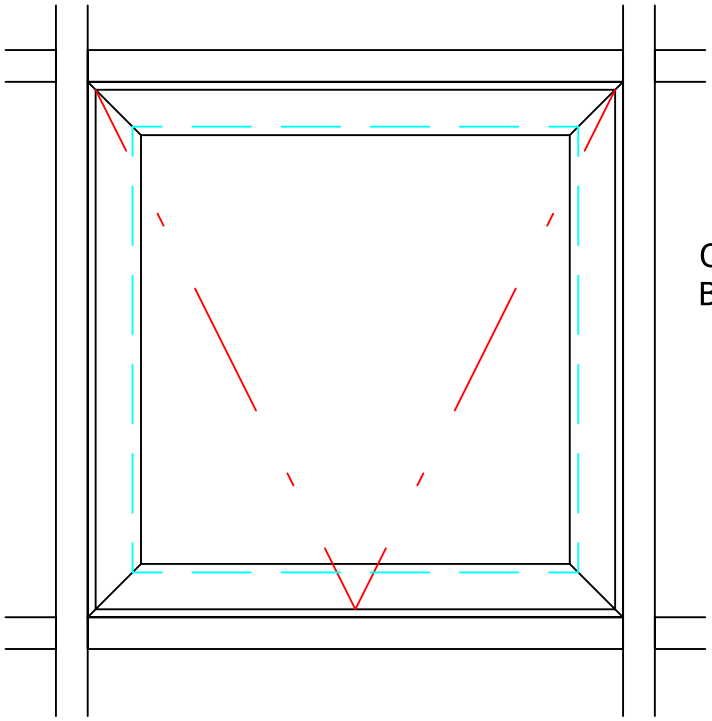

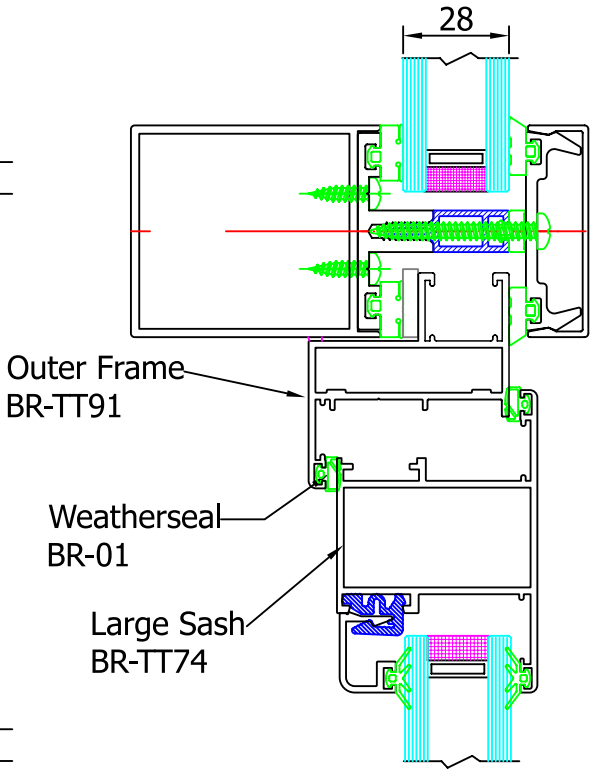


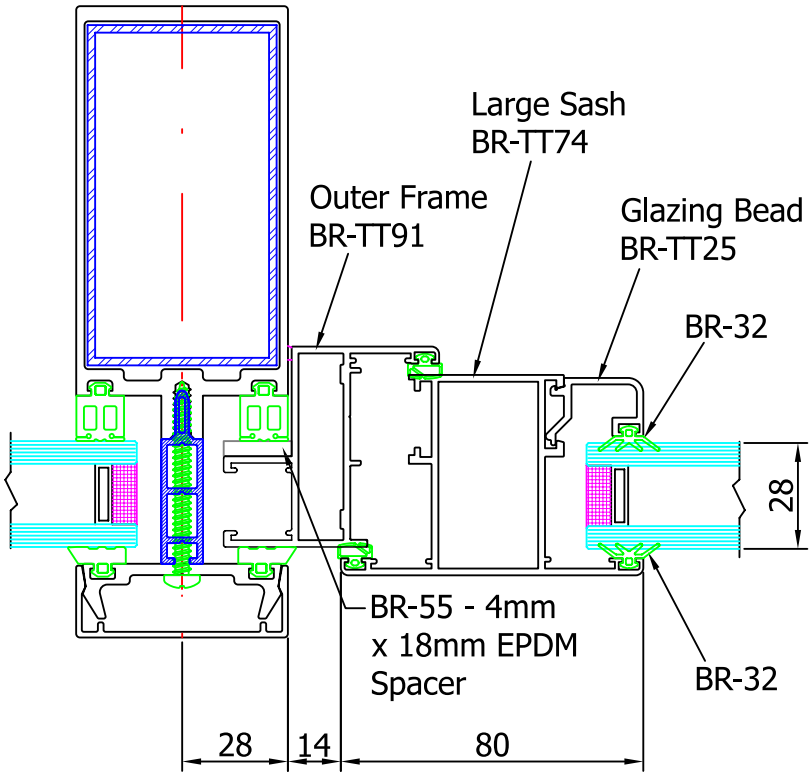


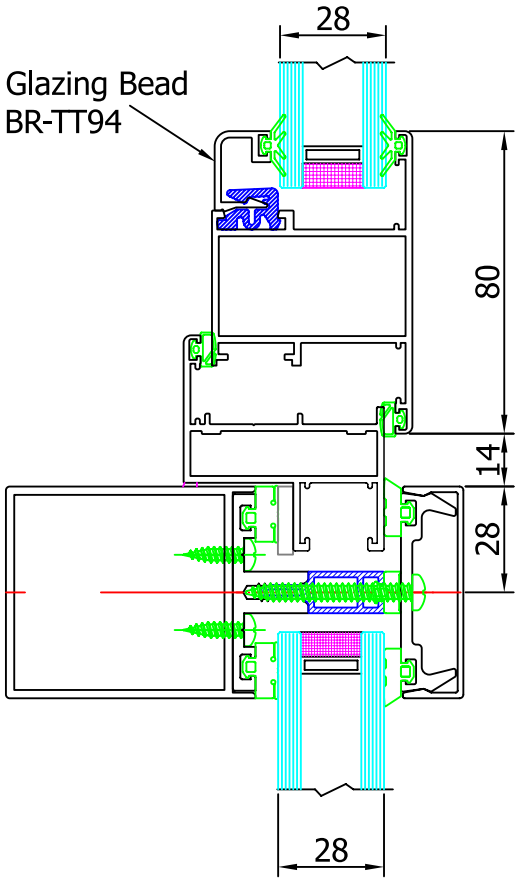

## Section41 - Frameless Opening Shutters

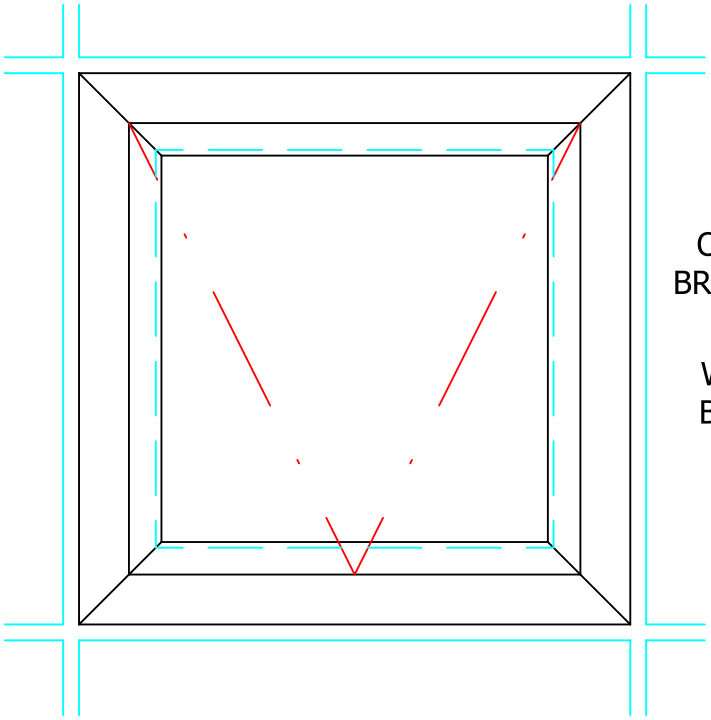

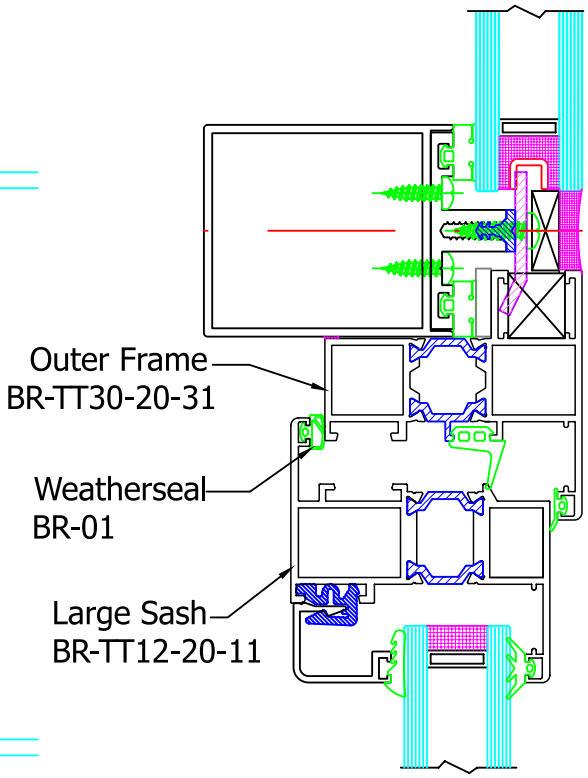


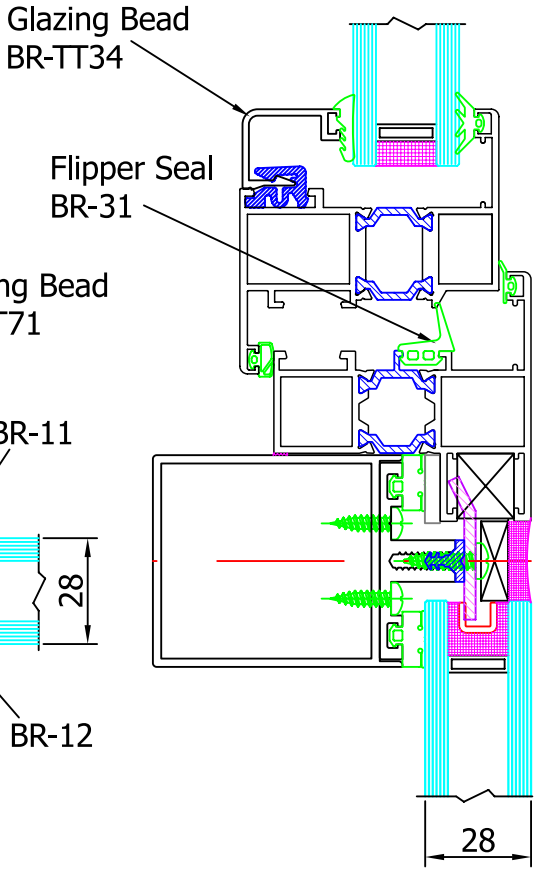


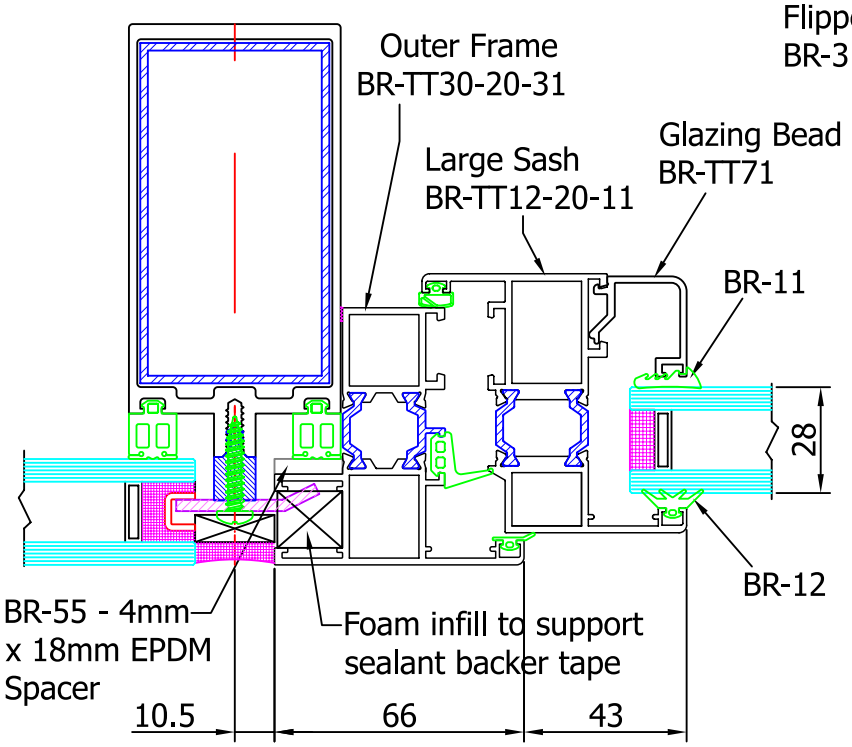

## Section41 - Frameless Opening Shutters

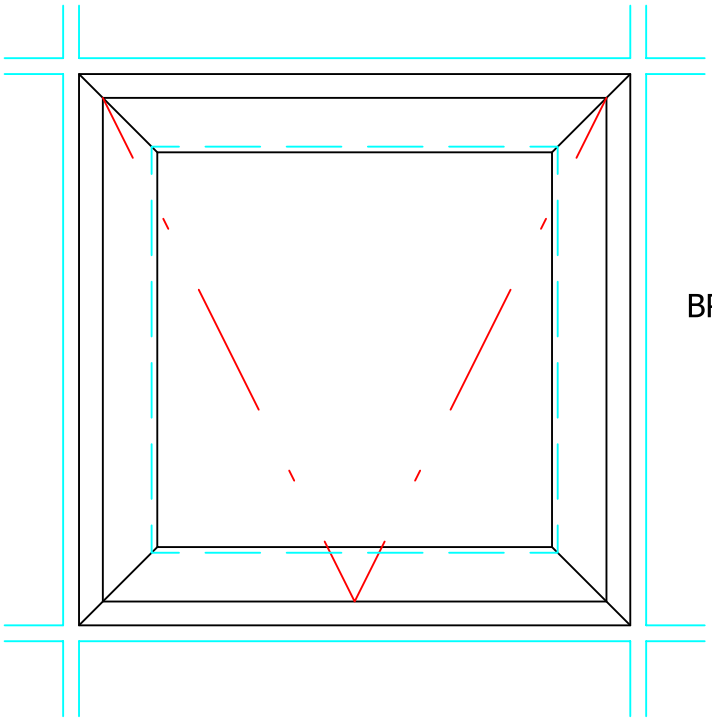

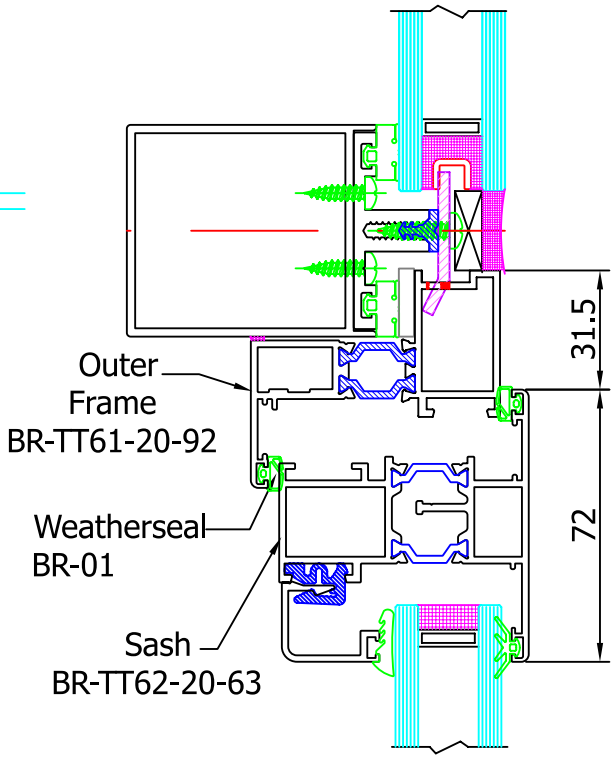


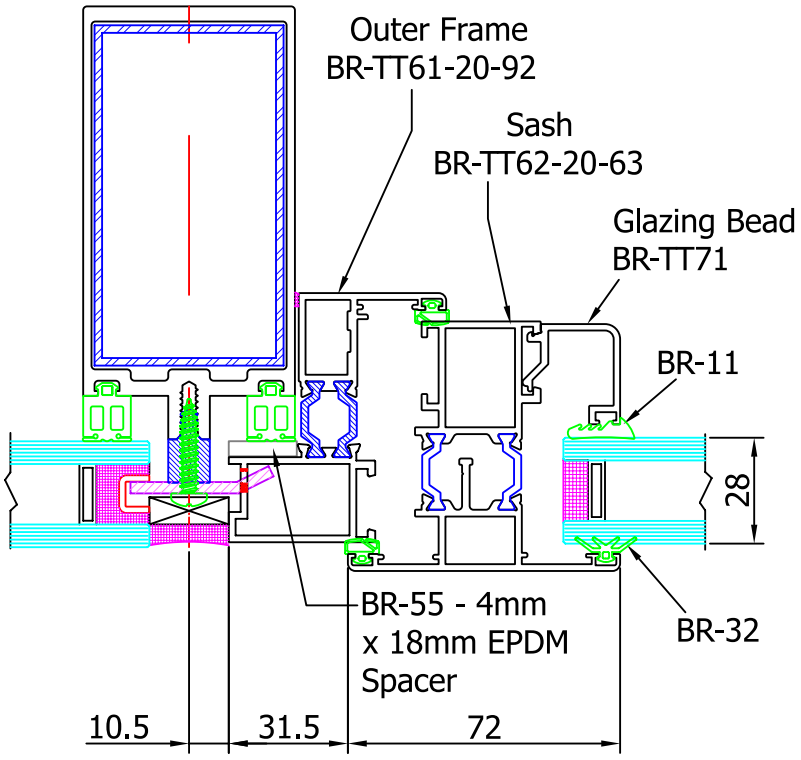


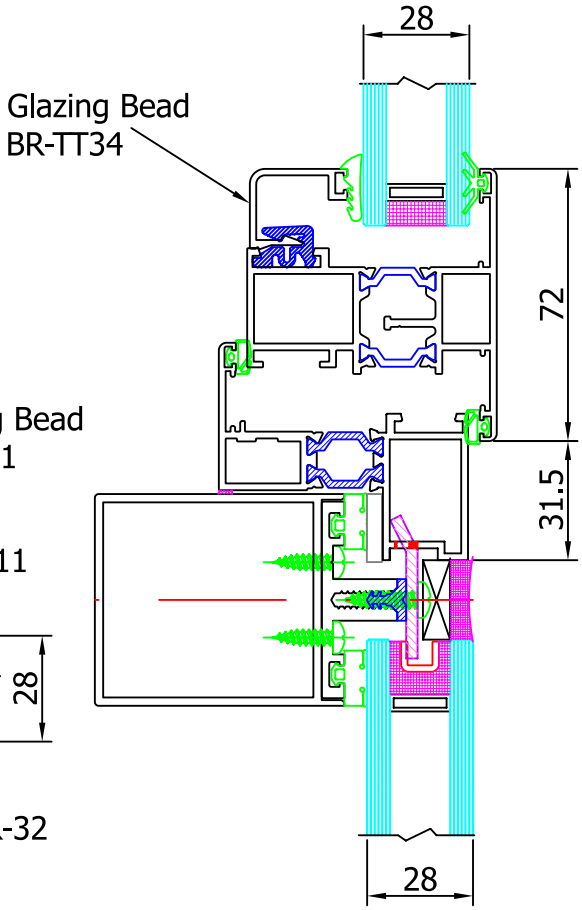

## Section41 - Frameless Opening Shutters

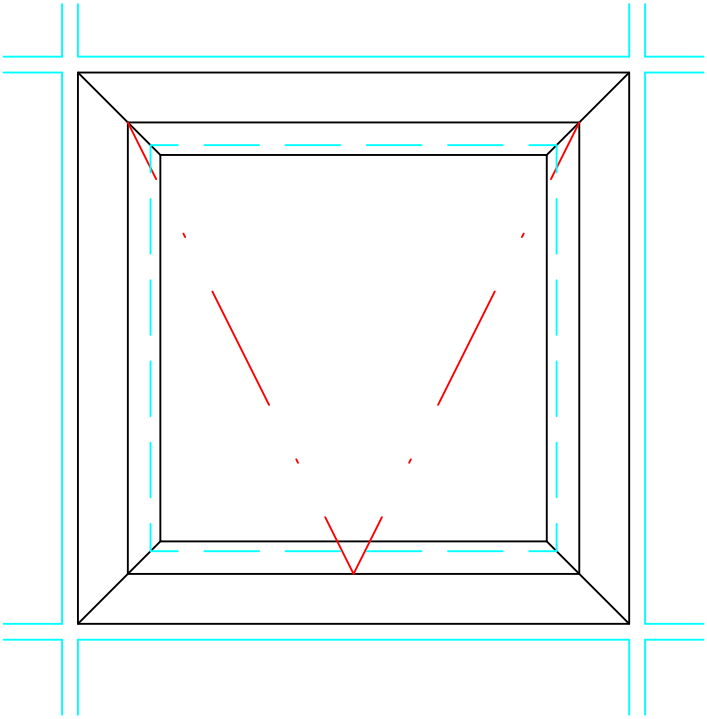

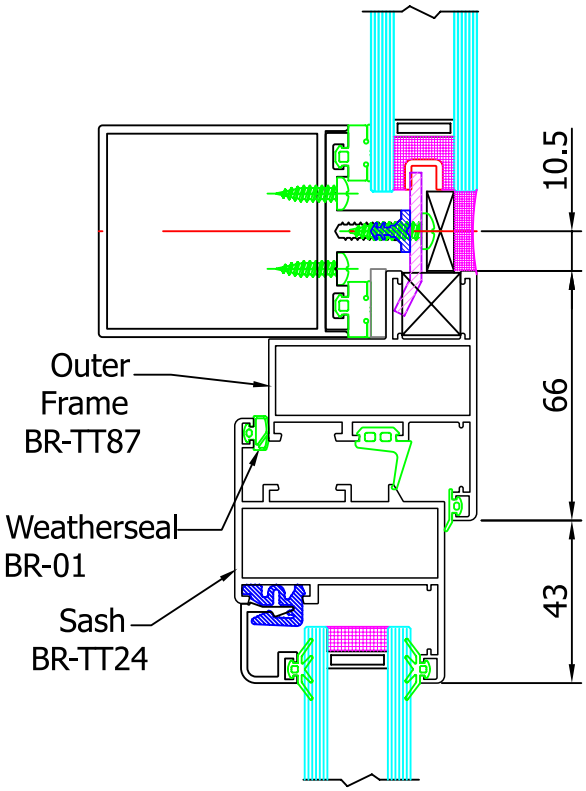


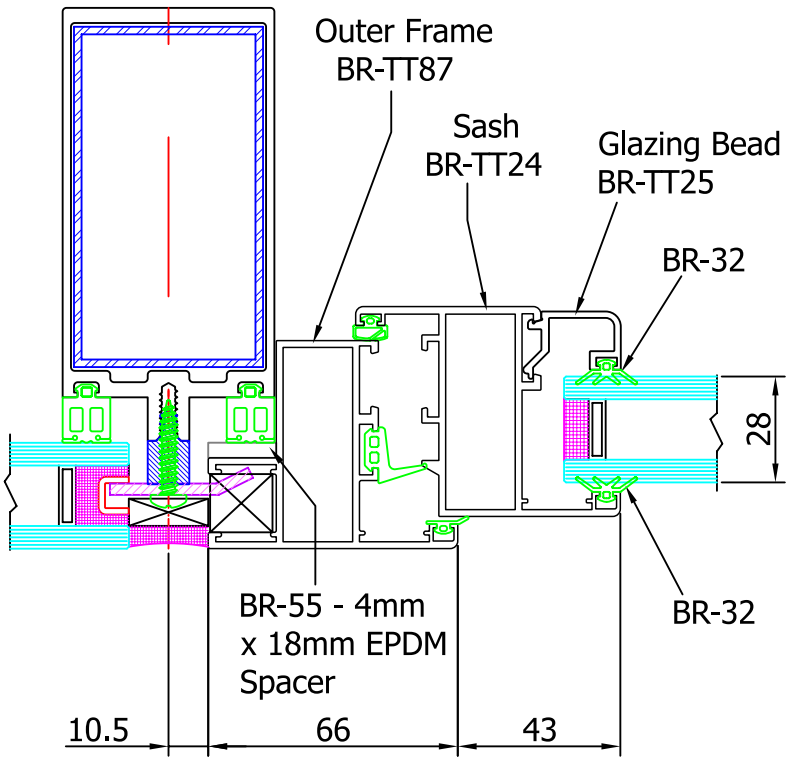


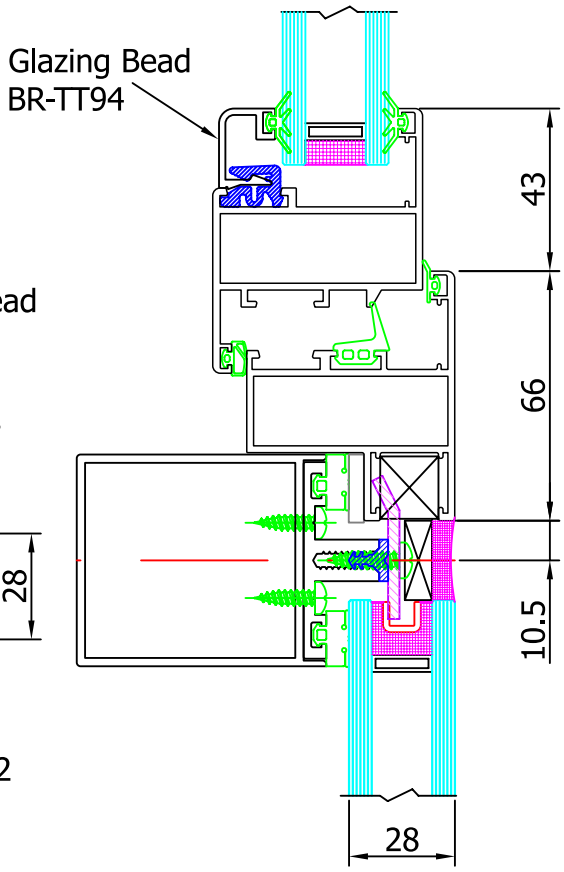

## Section41 - Frameless Opening Shutters

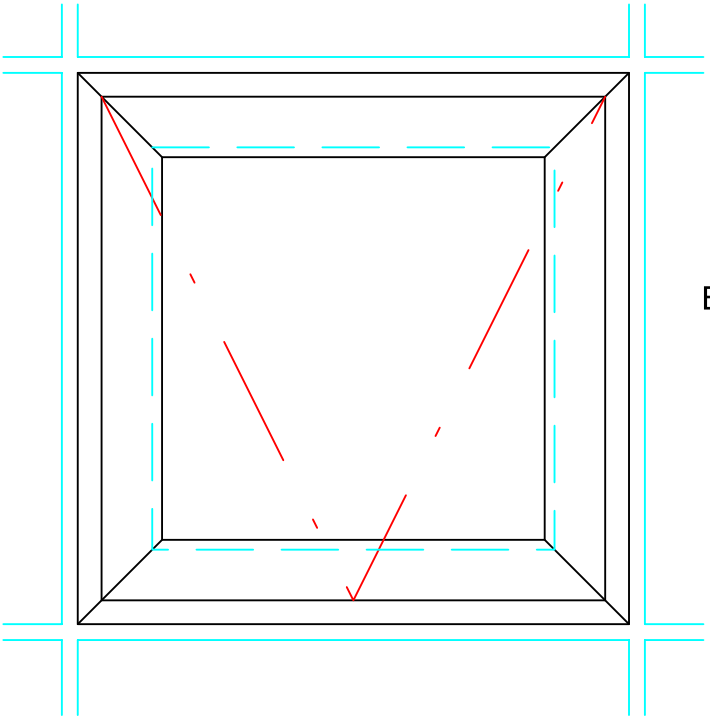

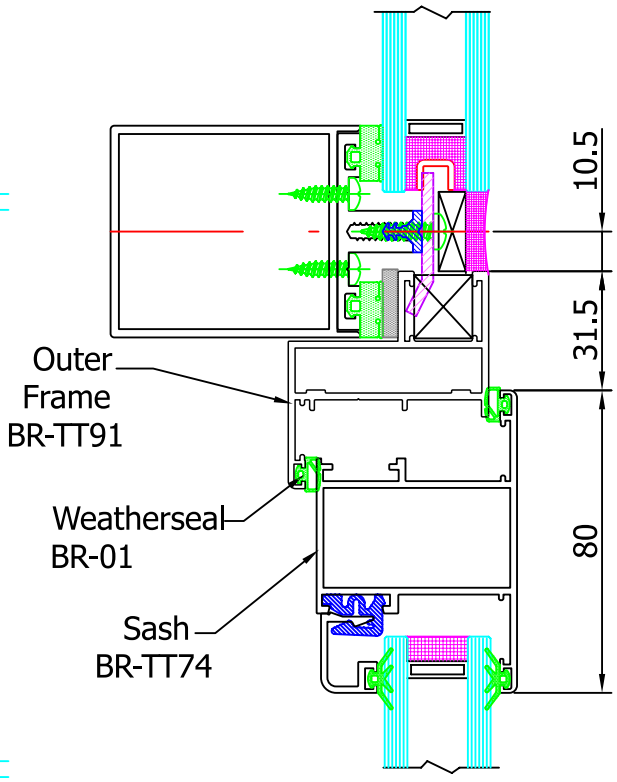


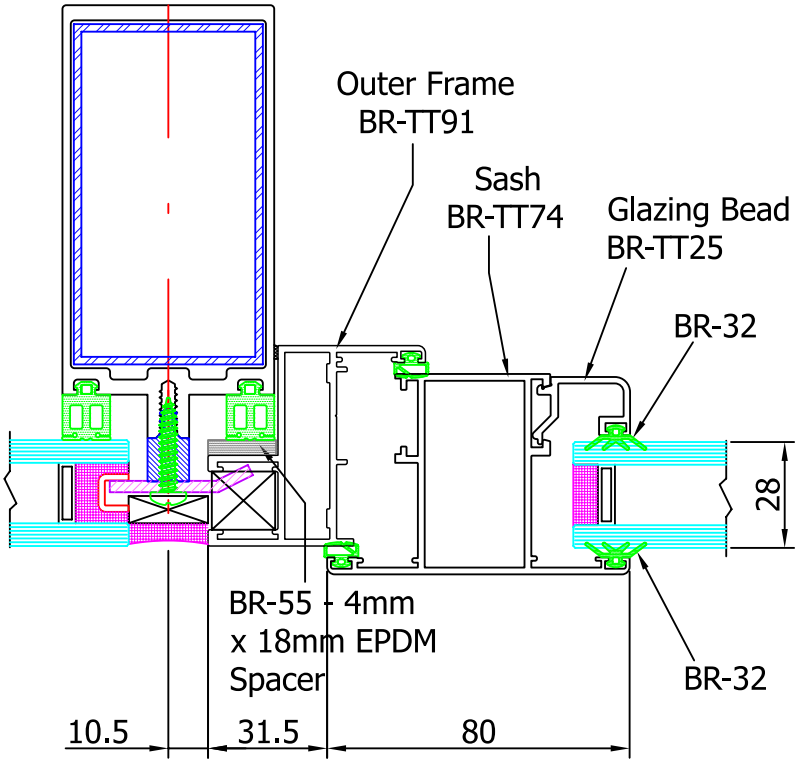


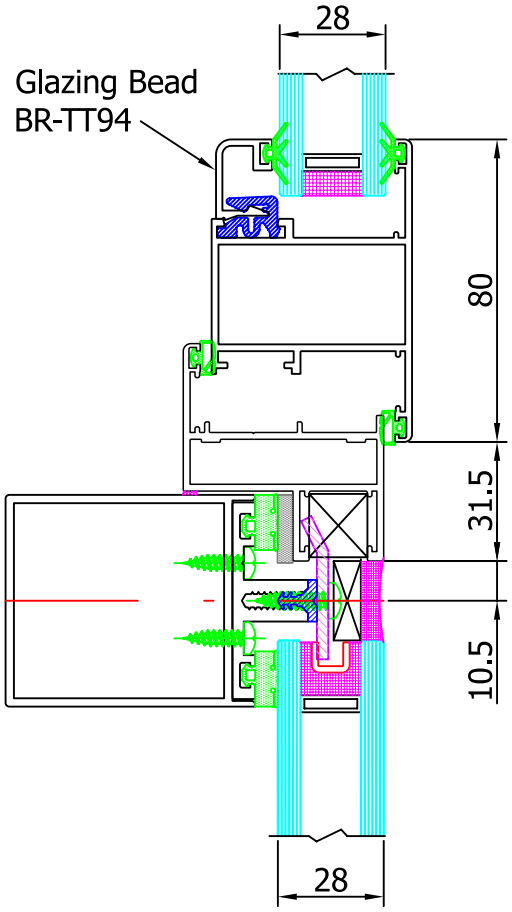

## Section41 - Frameless Opening Shutters

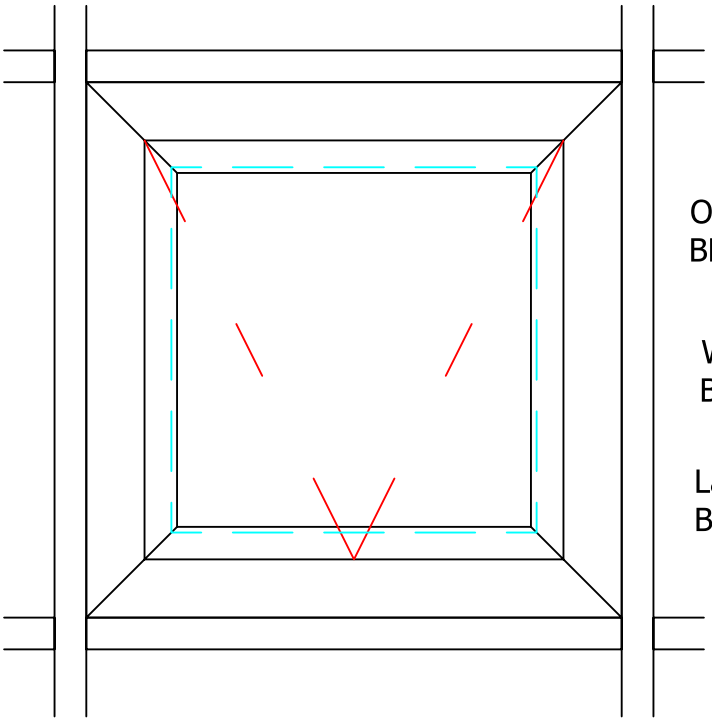

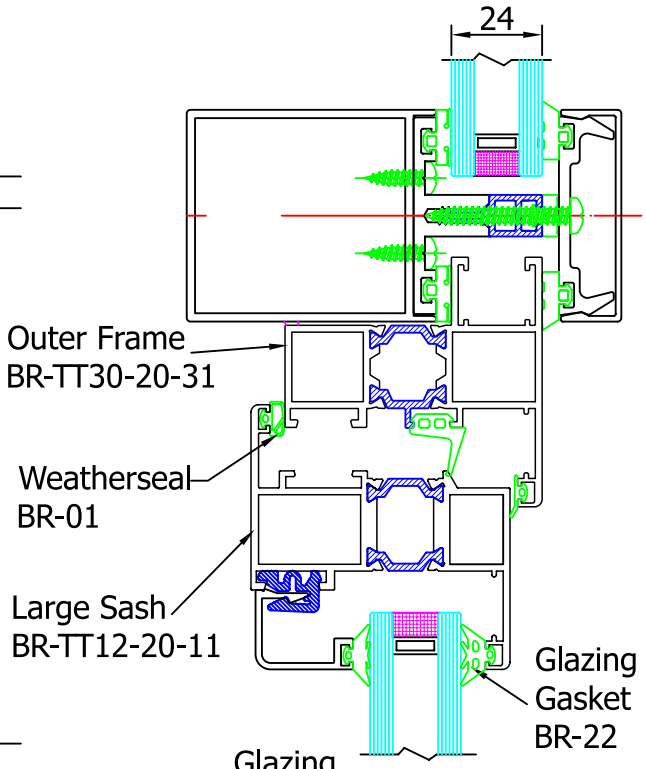


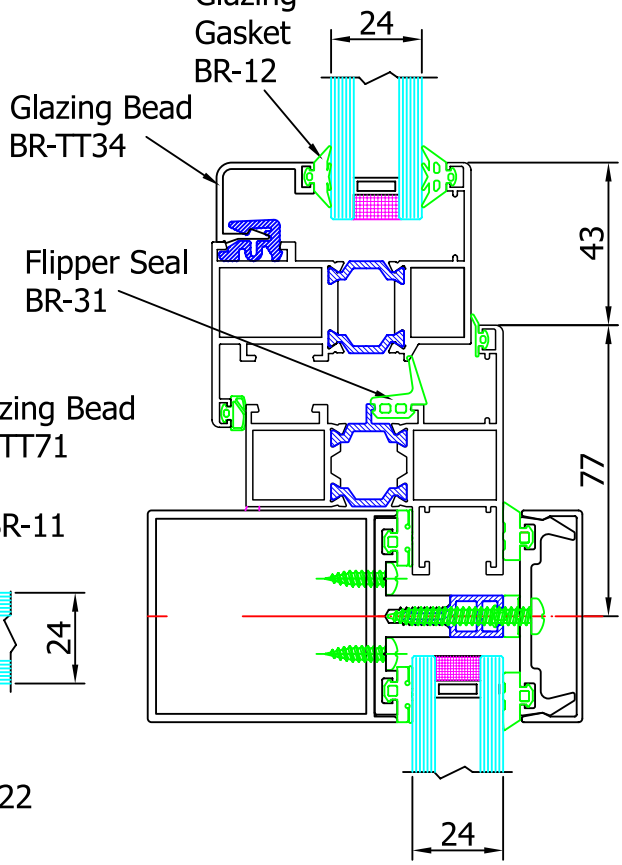


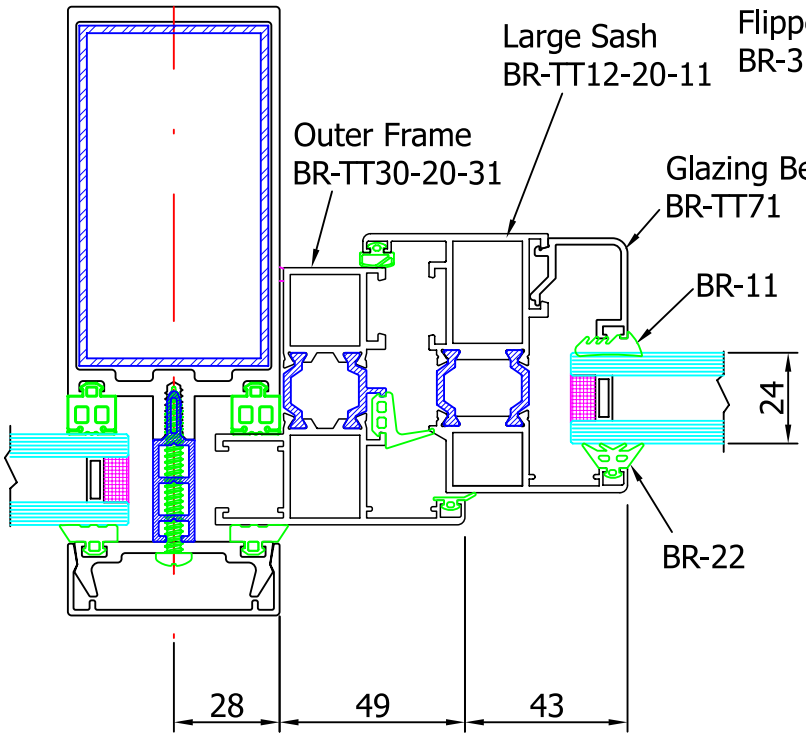

## Section41 - Frameless Opening Shutters

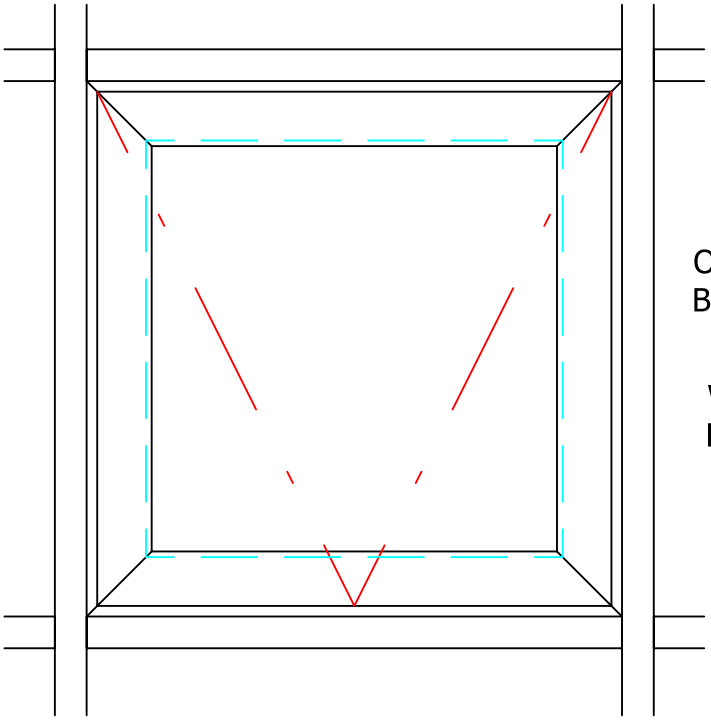

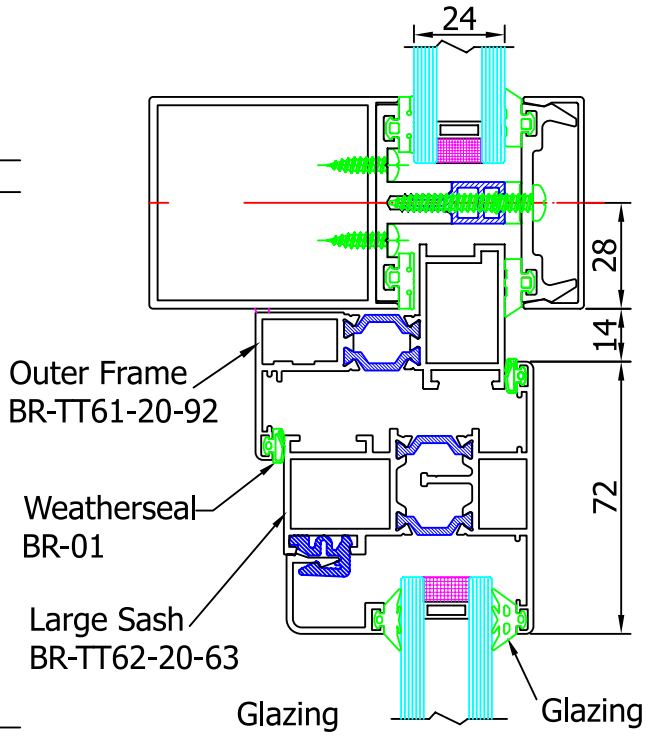


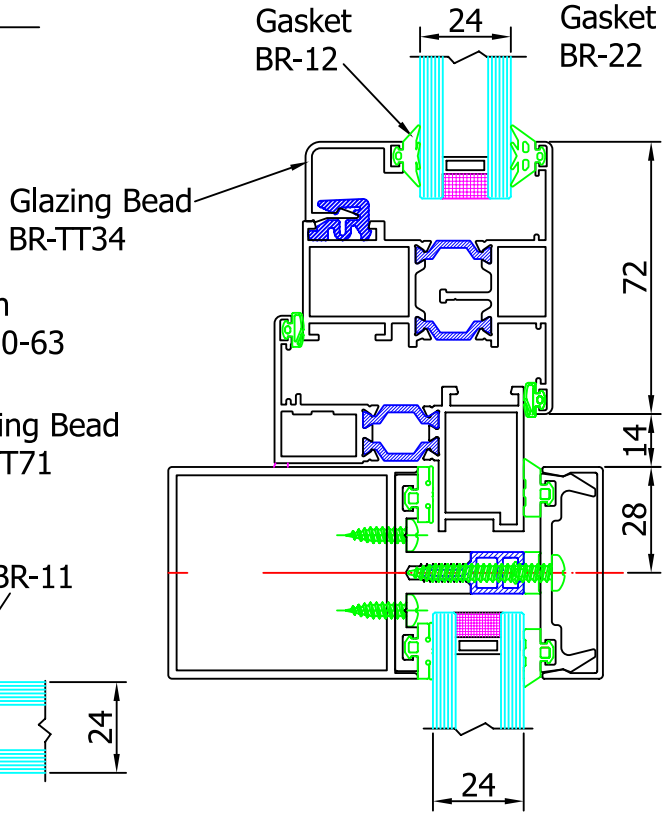


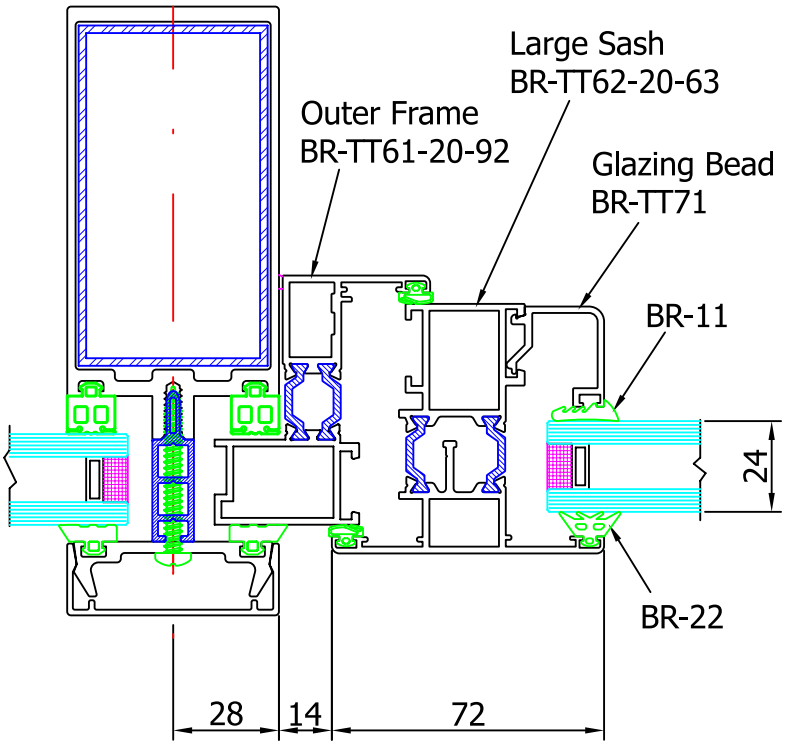

## Section41 - Frameless Opening Shutters

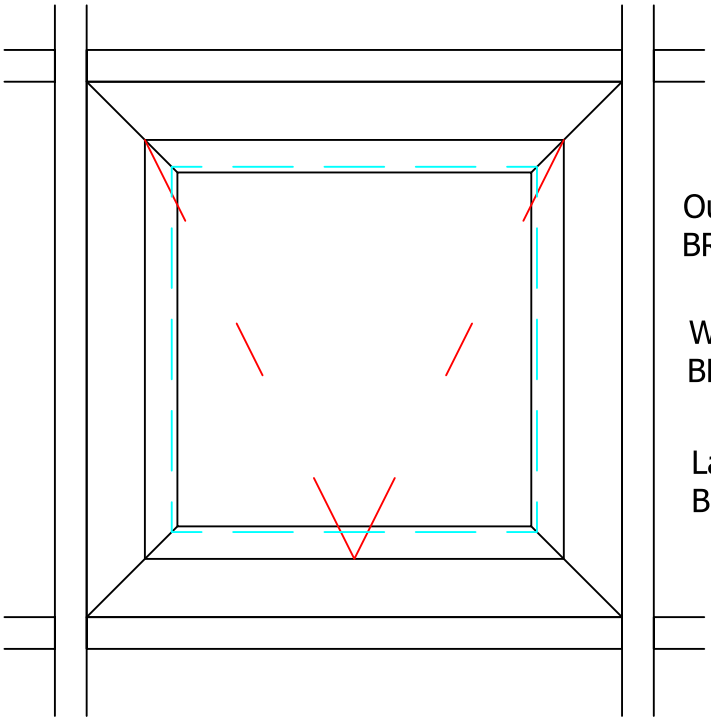

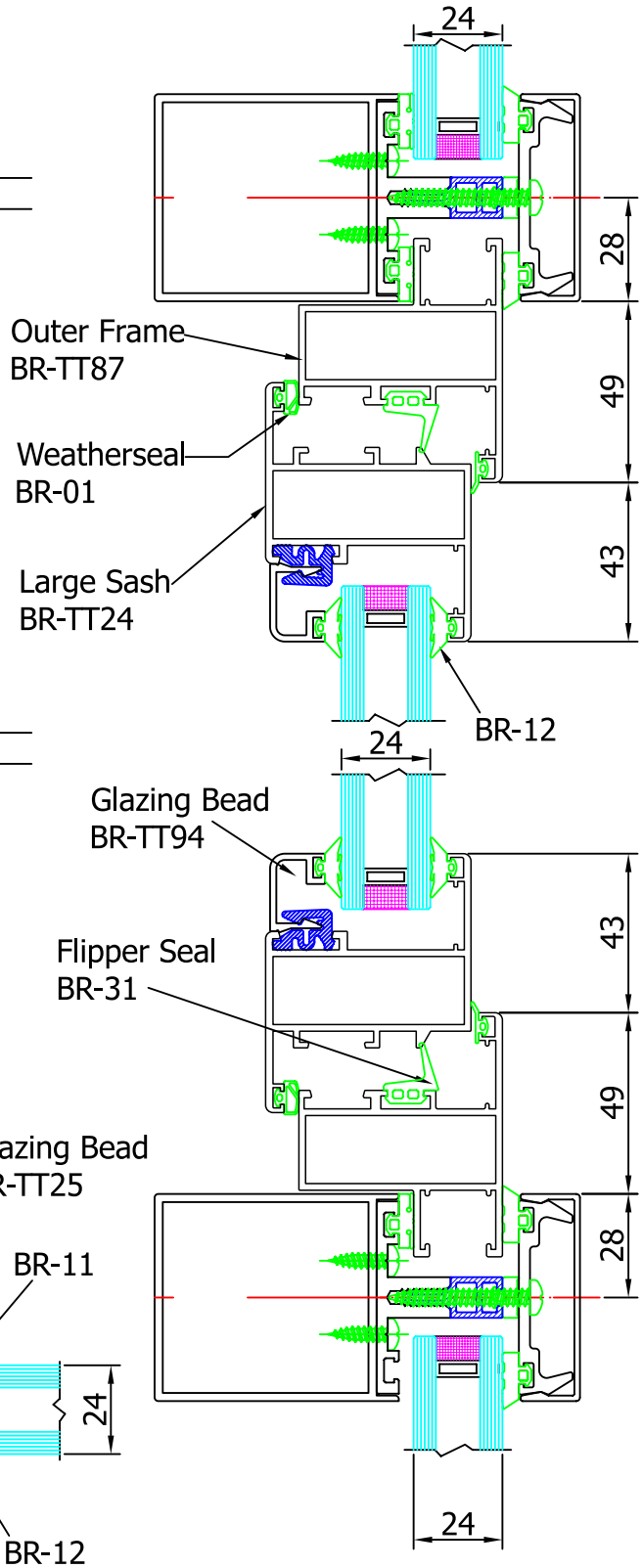


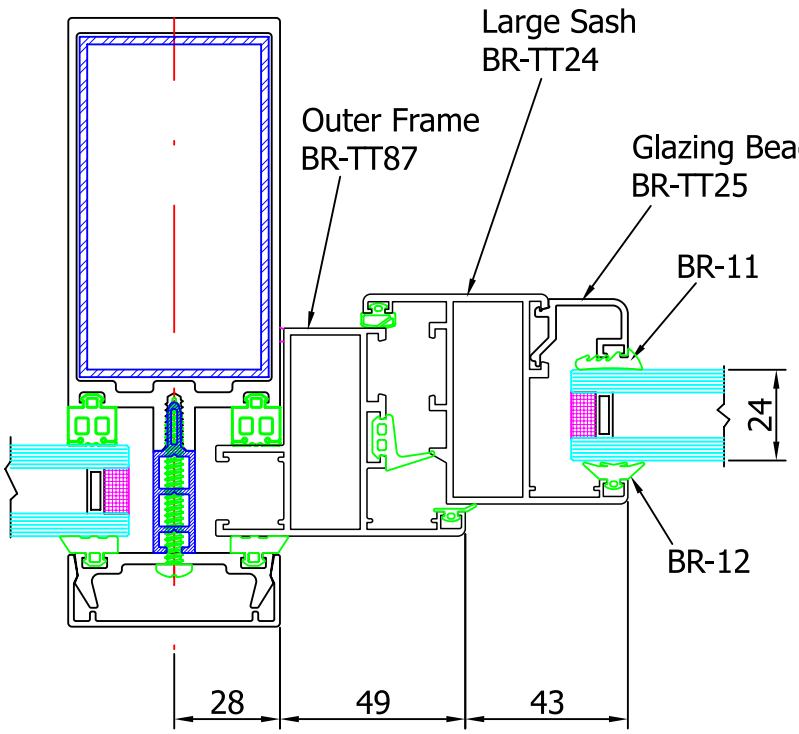

## Section41 - Frameless Opening Shutters

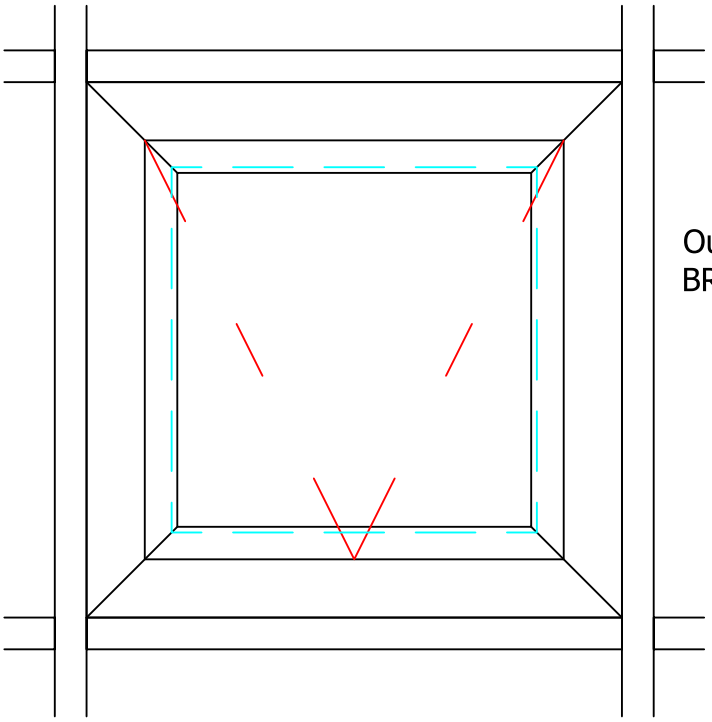

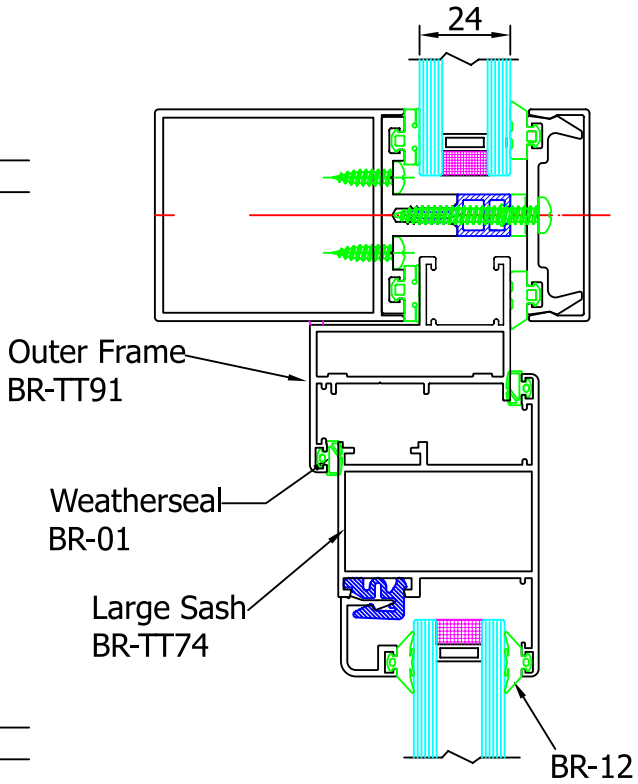


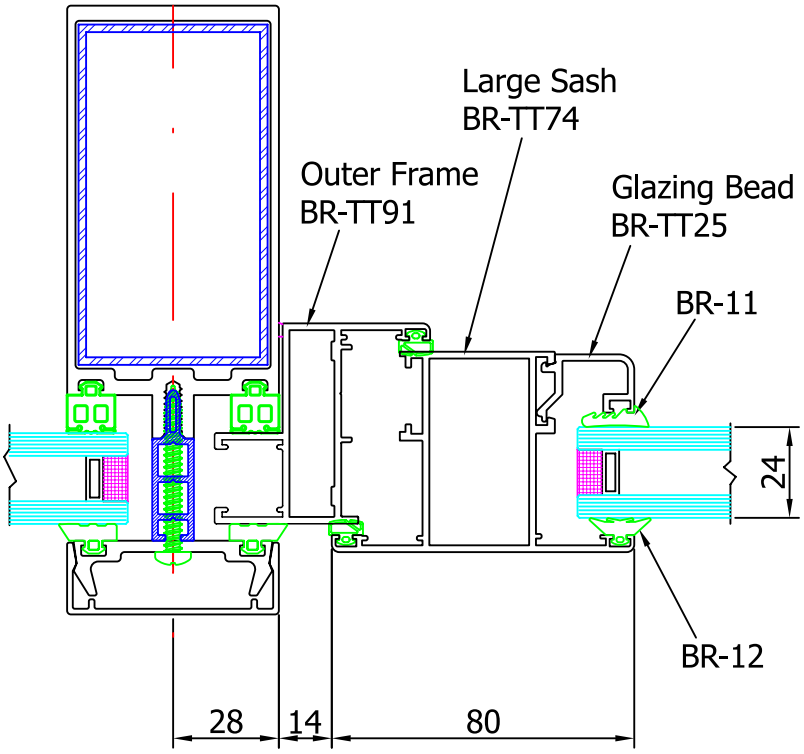


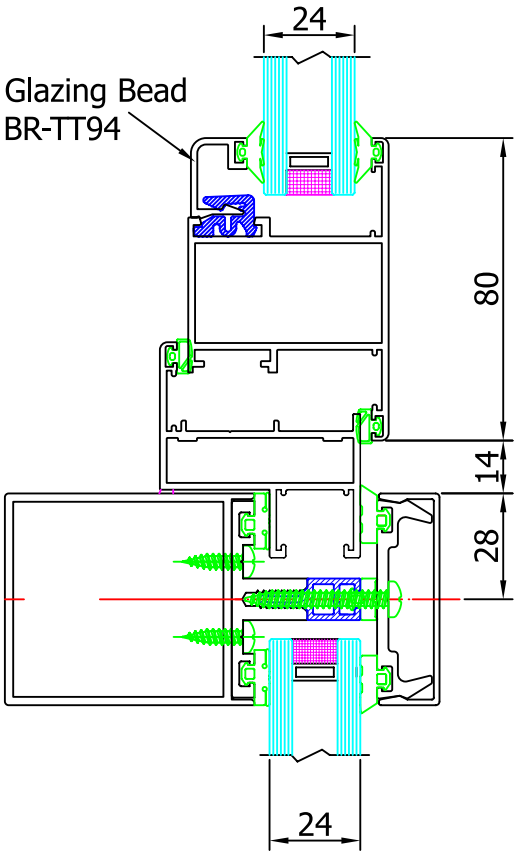

## Section42 - Sliding Doors

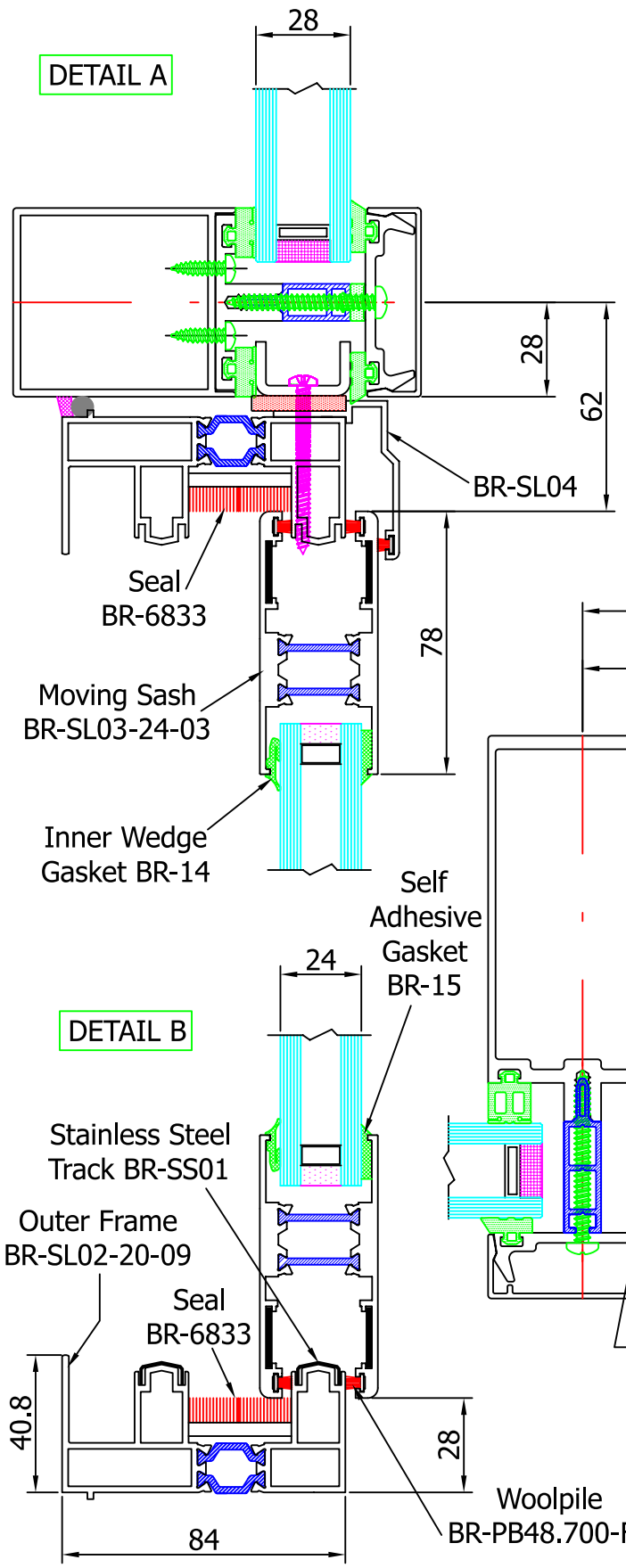


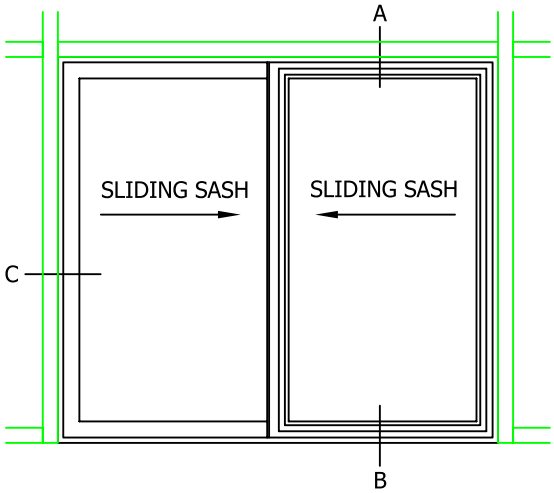


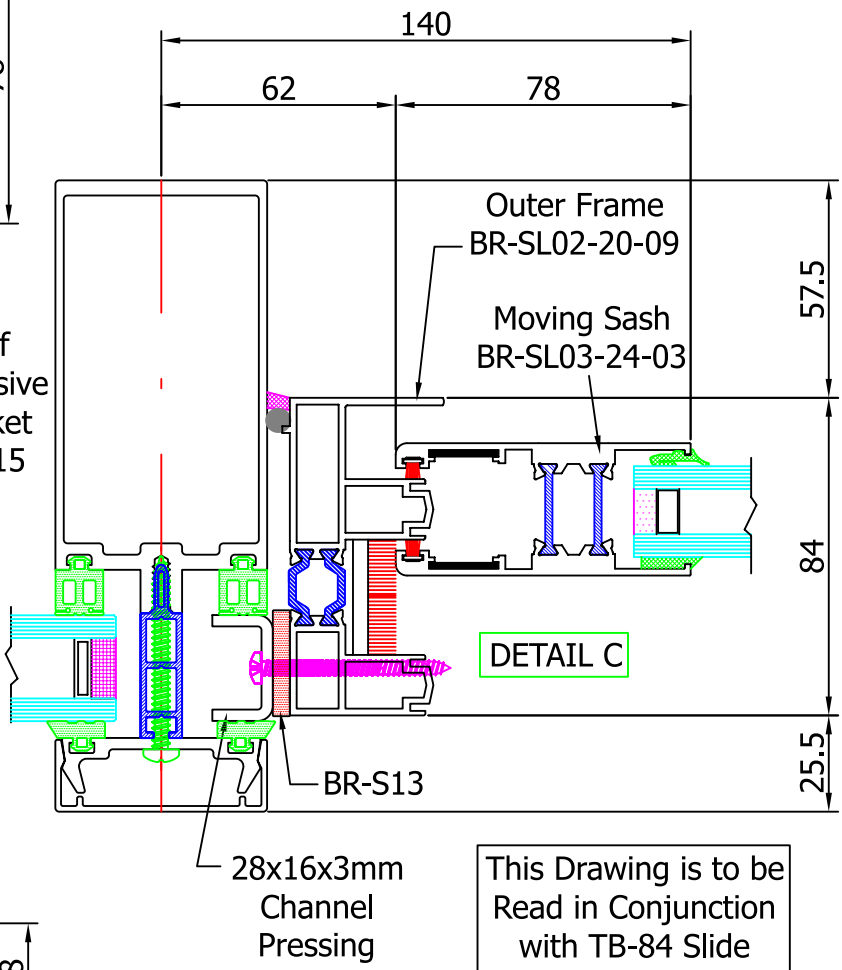


This Drawing is to be Read in Conjunction with TB-84 Slide System Manual

## Section42 - Sliding Doors

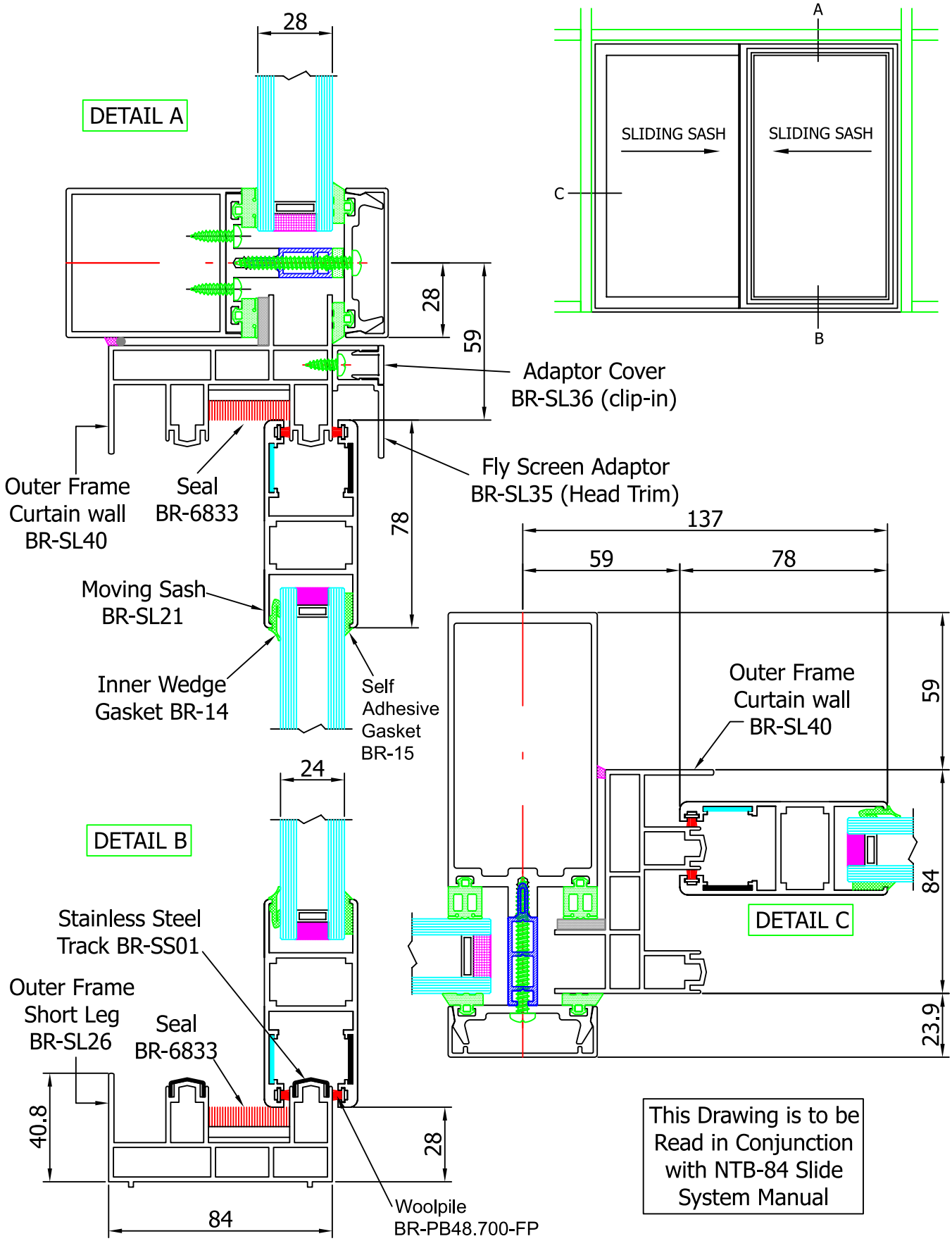


This Drawing is to be Read in Conjunction with NTB-84 Slide System Manual

## Section42 - Sliding Doors

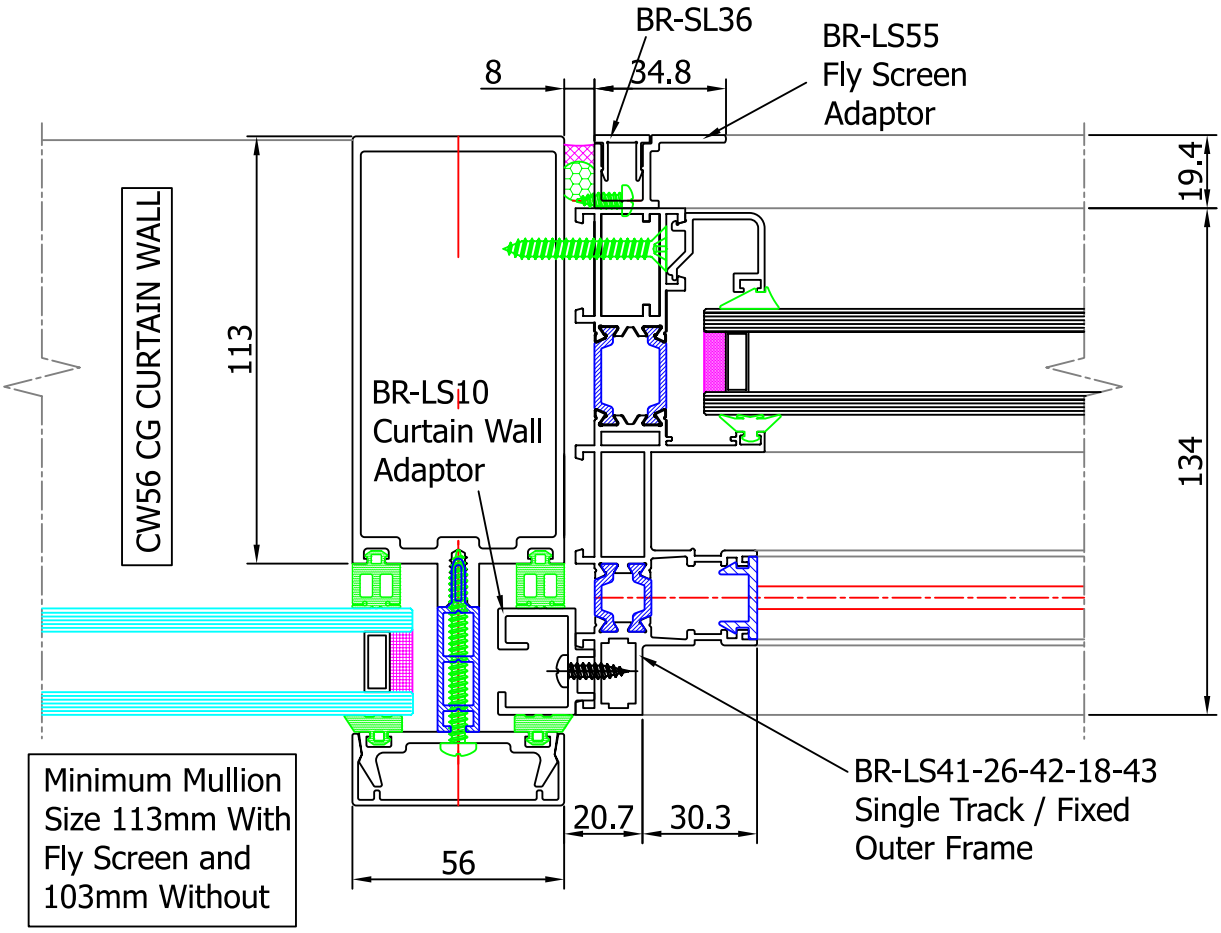


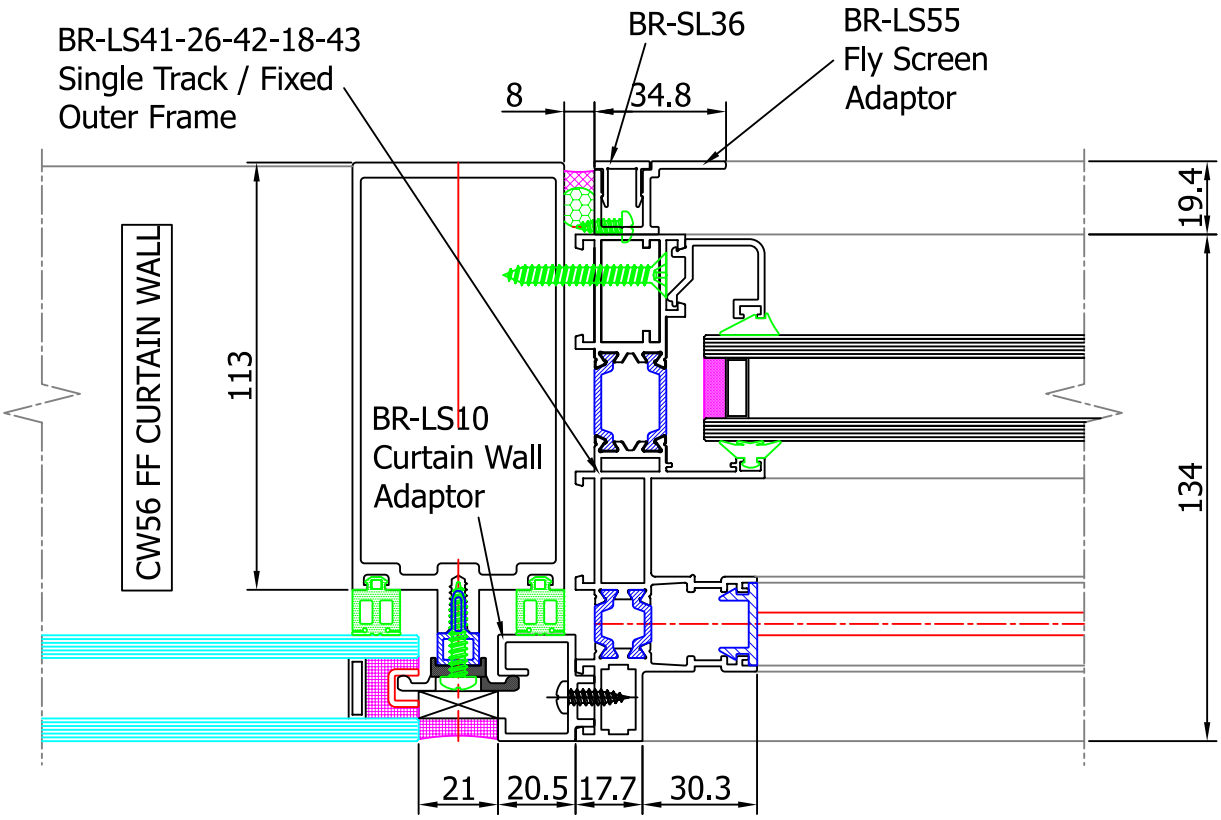


Scale 1:2

## Section42 - Sliding Doors

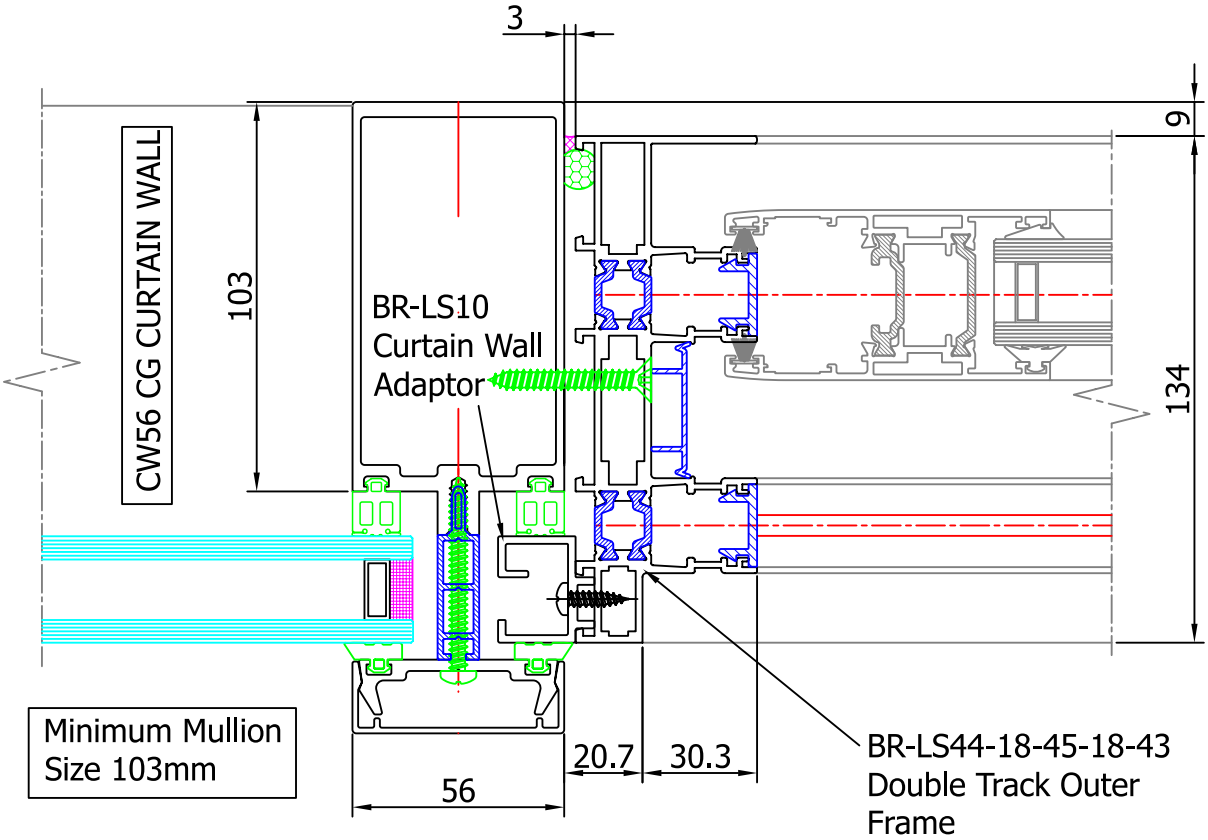


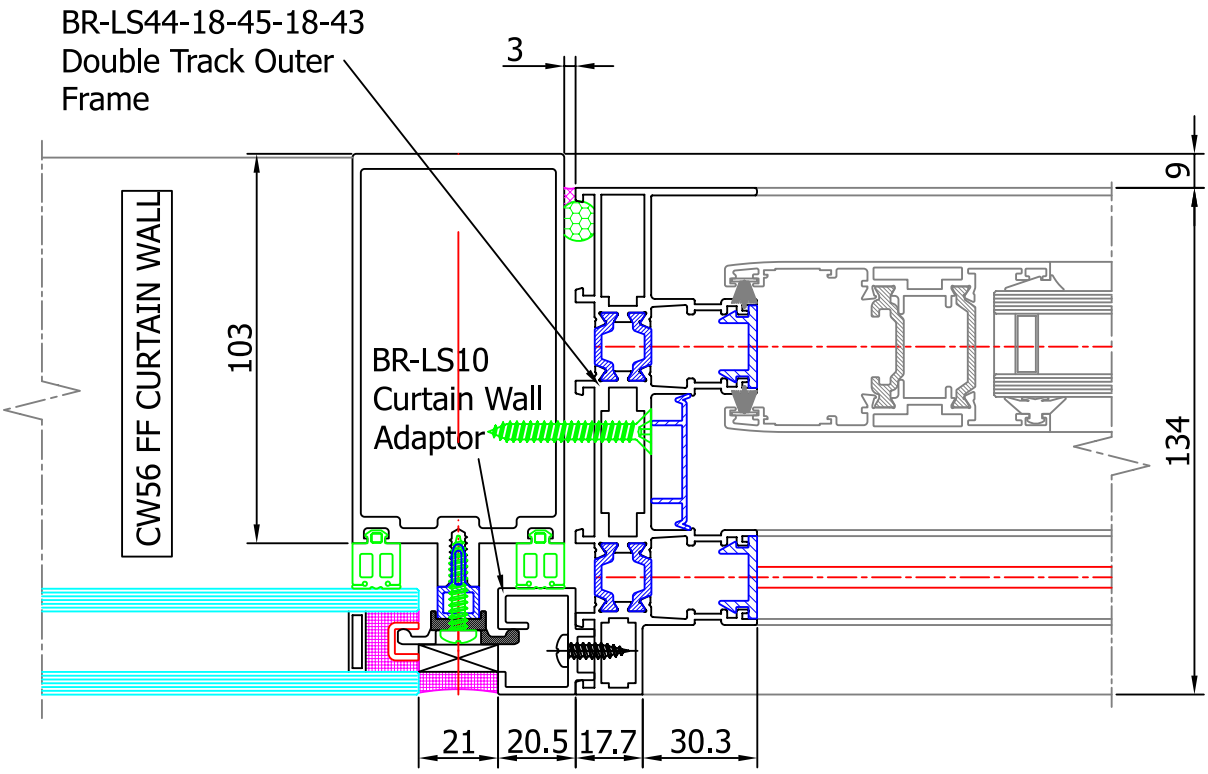


Scale 1:2

## Section43 - Doors

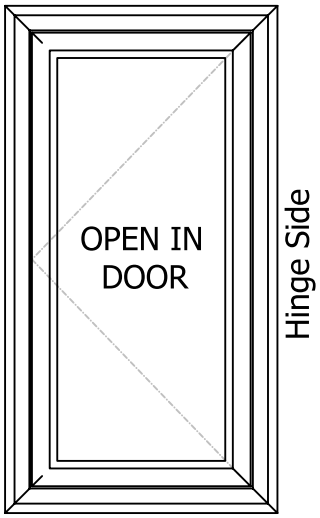


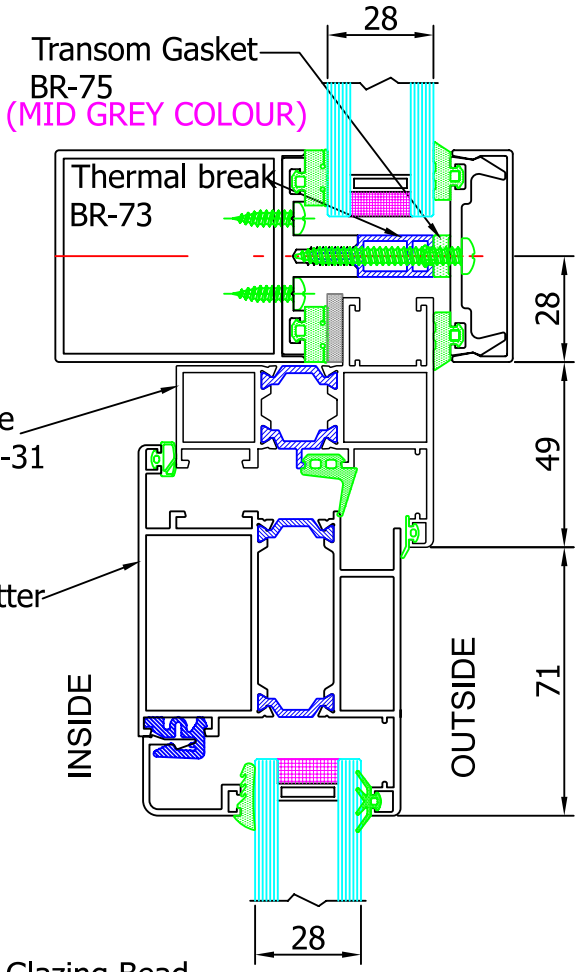


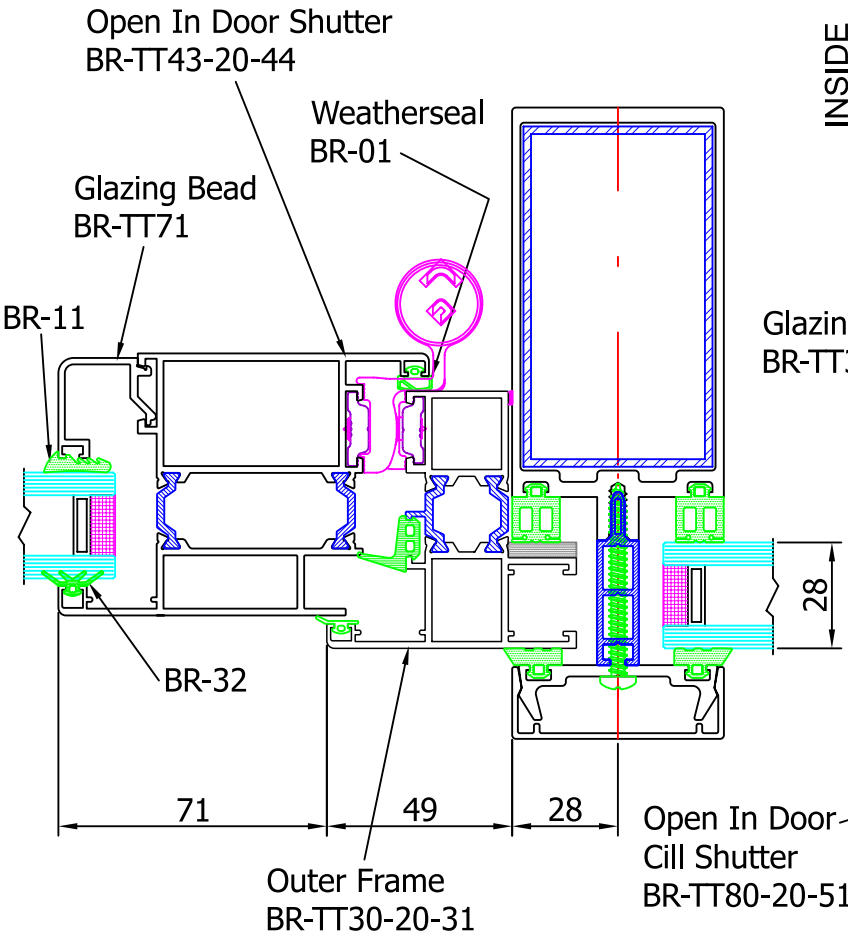


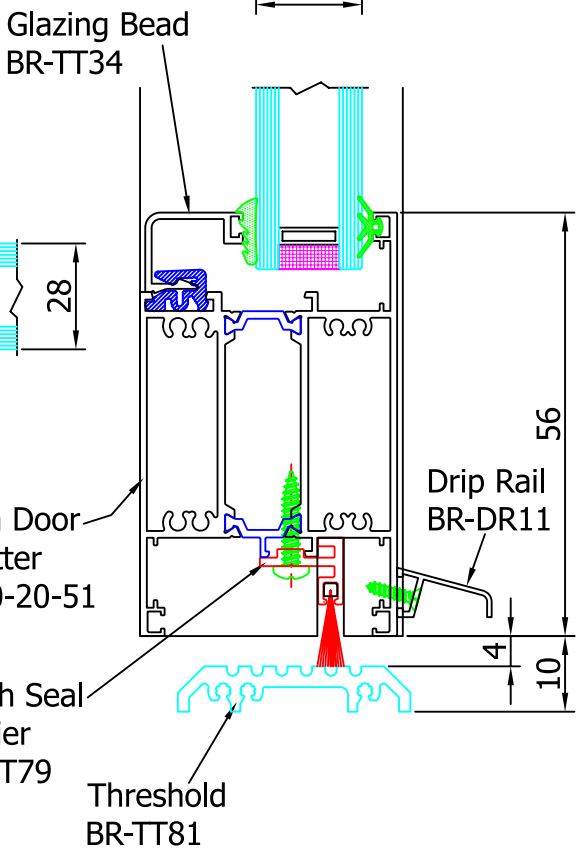

## Section43 - Doors

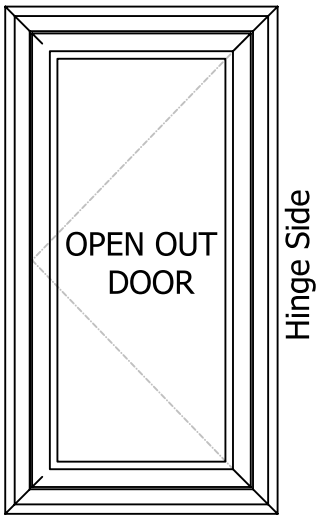


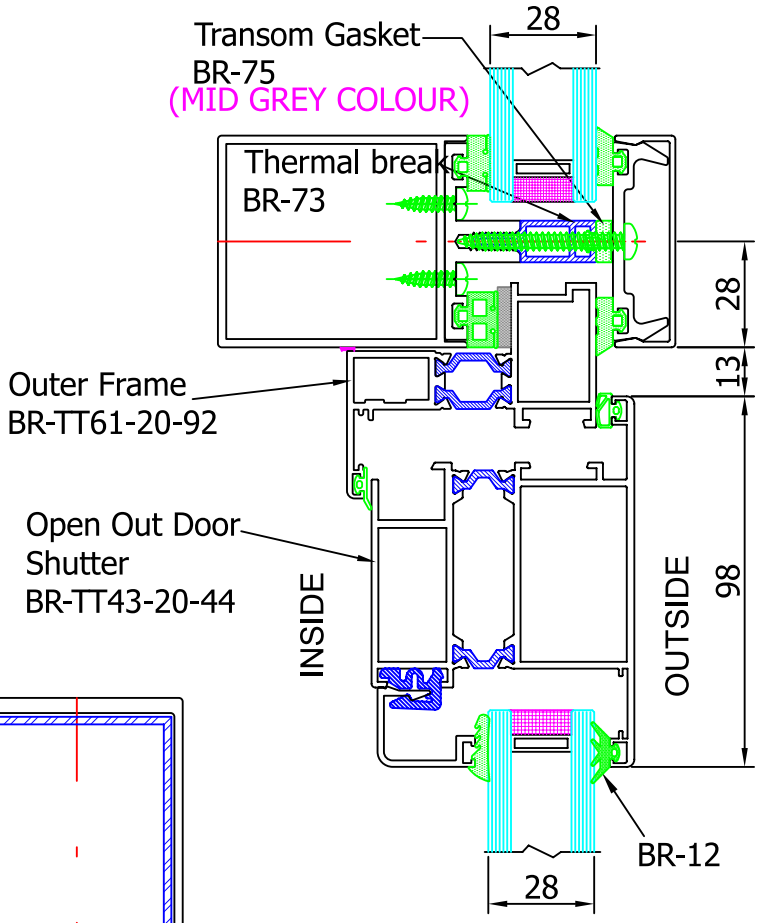


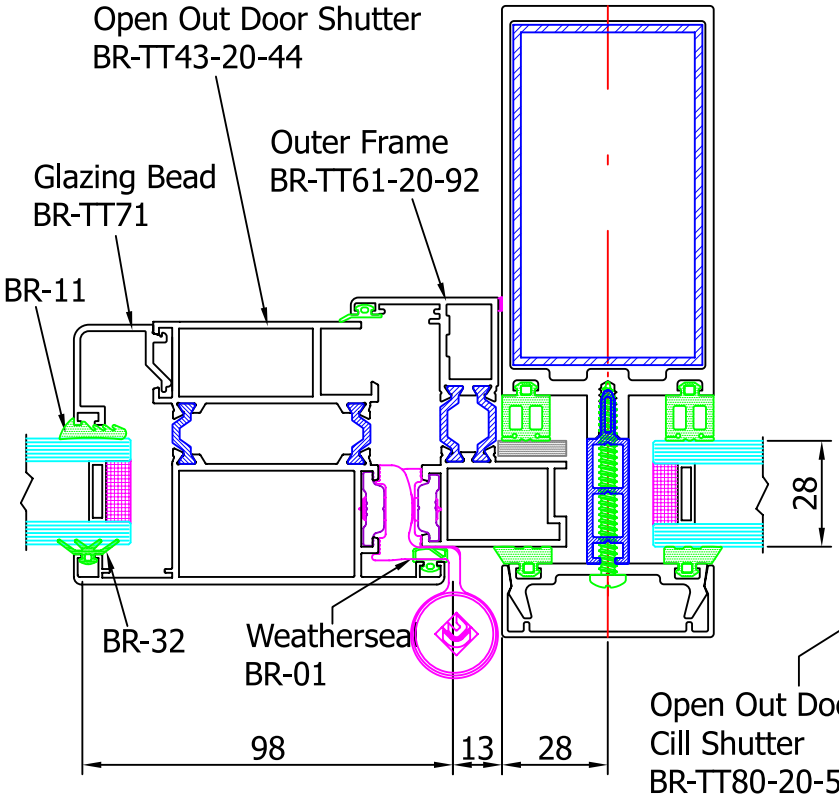


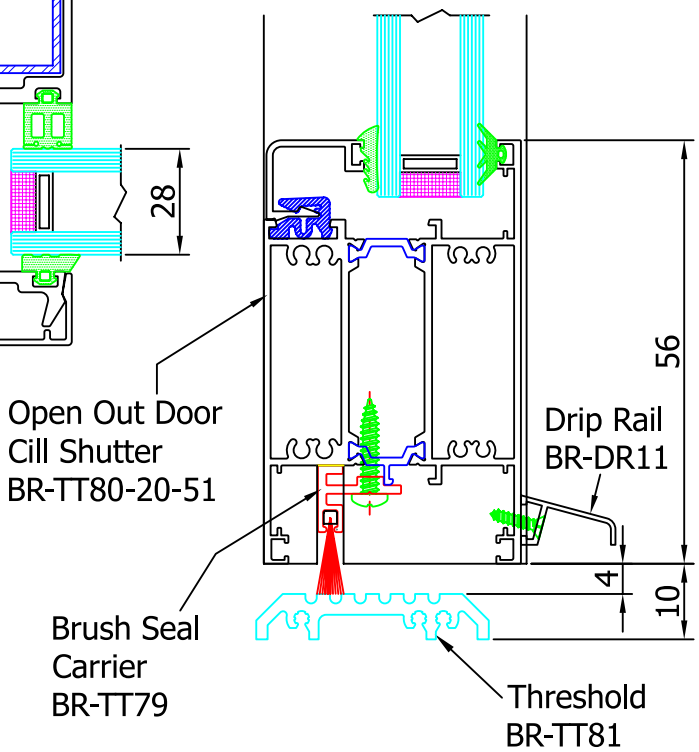

## Section43 - Doors

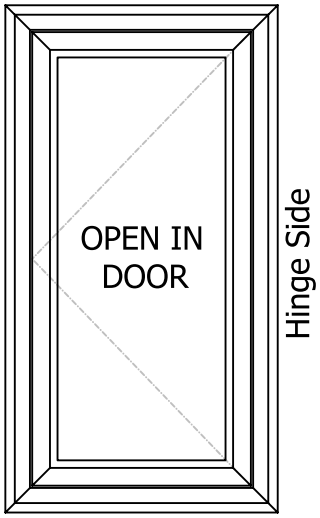


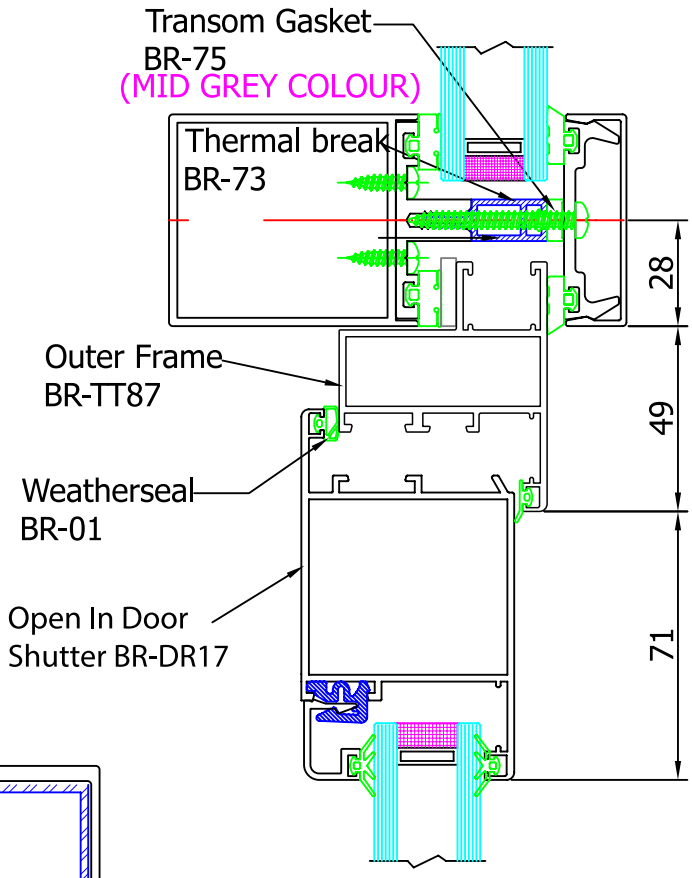


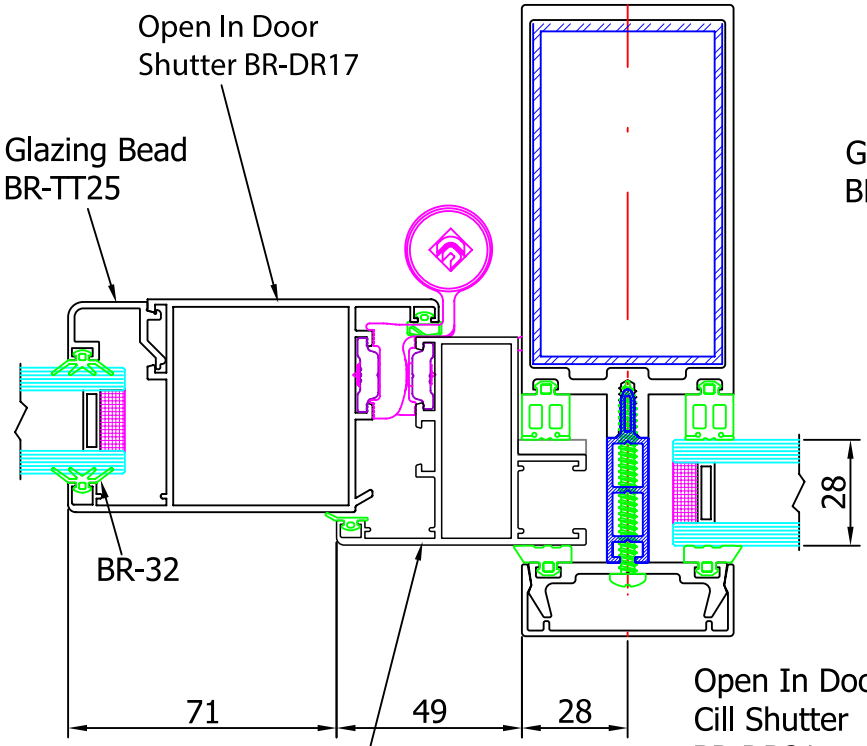


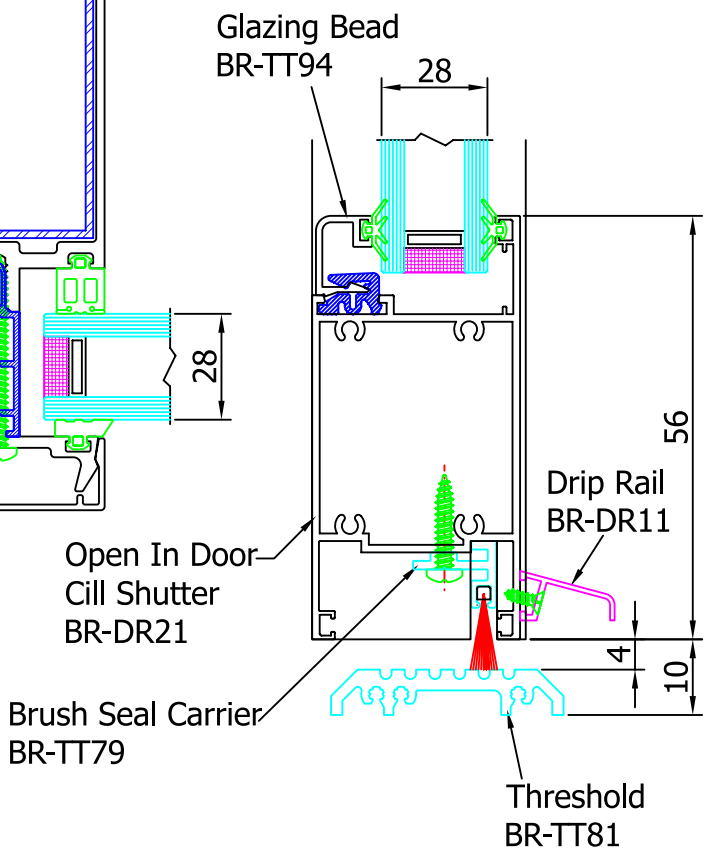

## Section44 - Bottom Hung Open Out Vents

# The system offers thermally broken sections for Standard shutters with concealed hinge fittings.

### Open-out:- Bottom Hung shutters to comply with UAE Fire and Life Code Section 2.17.3.

In situations where opening shutters are required to comply with the UAE code 2.17.3. Brital can provide a bottom hung open out window.

The permitted weight and size of these shutters are limited to enable them to be closed without the need for excessive force depending on the size and weight of the windows differing configurations of ironmongery are required. All shutters must be fitted with a restrictor to limit the maximum size of the clear opening to 100mm.

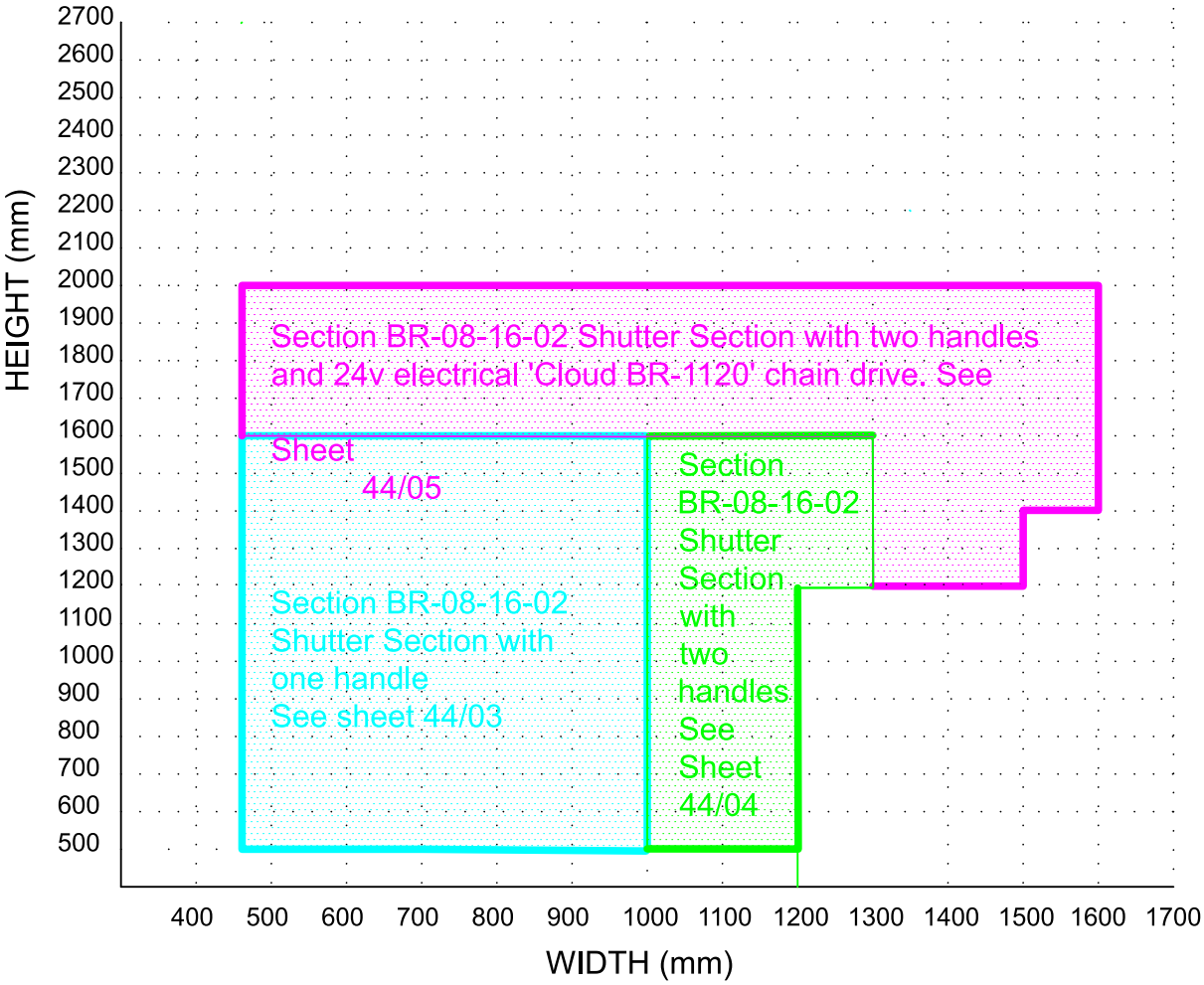


Maximum Shutter weights are limited to enable them to be open and closed without the need for excessive force, see sheet 44/02 for detailed information.

## Section44 - Bottom Hung Open Out Vents

| Shutter Height (mm) | Manual Operation (kg) 70N | Manual Operation (kg) 100N | With Cloud Chain operator (kg) | Hinge Type | Maximum Shutter Width |
|---|---|---|---|---|---|
| 500 | 8.9 | 12.7 | 50 | BR-1206.10 | 1200mm |
| 600 | 10.7 | 15.3 | 50 | | |
| 700 | 12.5 | 17.8 | 700 | BR-1206.12 | 1200mm |
| 800 | 14.3 | 20.4 | 70 | | |
| 900 | 16.1 | 22.9 | 80 | BR-1206.14 | 1200mm |
| 1000 | 17.8 | 25.5 | 80 | | |
| 1100 | 19.6 | 28.0 | 95 | BR-1206.16 | 1200mm |
| 1200 | 21.4 | 30.6 | 95 | | |
| 1300 | 23.2 | 33.1 | 108 | BR-1206.18 | 1500mm |
| 1400 | 25.0 | 35.7 | 108 | | |
| 1500 | 26.8 | 38.2 | 115 | BR-1206.20 | 1600mm |
| 1600 | 28.5 | 40.8 | 115 | | |
| 1700 | N/A | N/A | 120 | BR-1206.22 | 1600mm |
| 1800 | N/A | N/A | 120 | | |
| 1900 | N/A | N/A | 130 | BR-1206.24 | 1600mm |
| 2000 | N/A | N/A | 130 | | |

Manual operation is based on closing forces of 70N (US standards) & 100N BS 6375,Part2 (without wind load)

Note:- it is permissible to fit a chain operator to smaller windows where the shutter weight exceed the maximum allowable value for manual operation.

## Section44 - Bottom Hung Open Out Vents

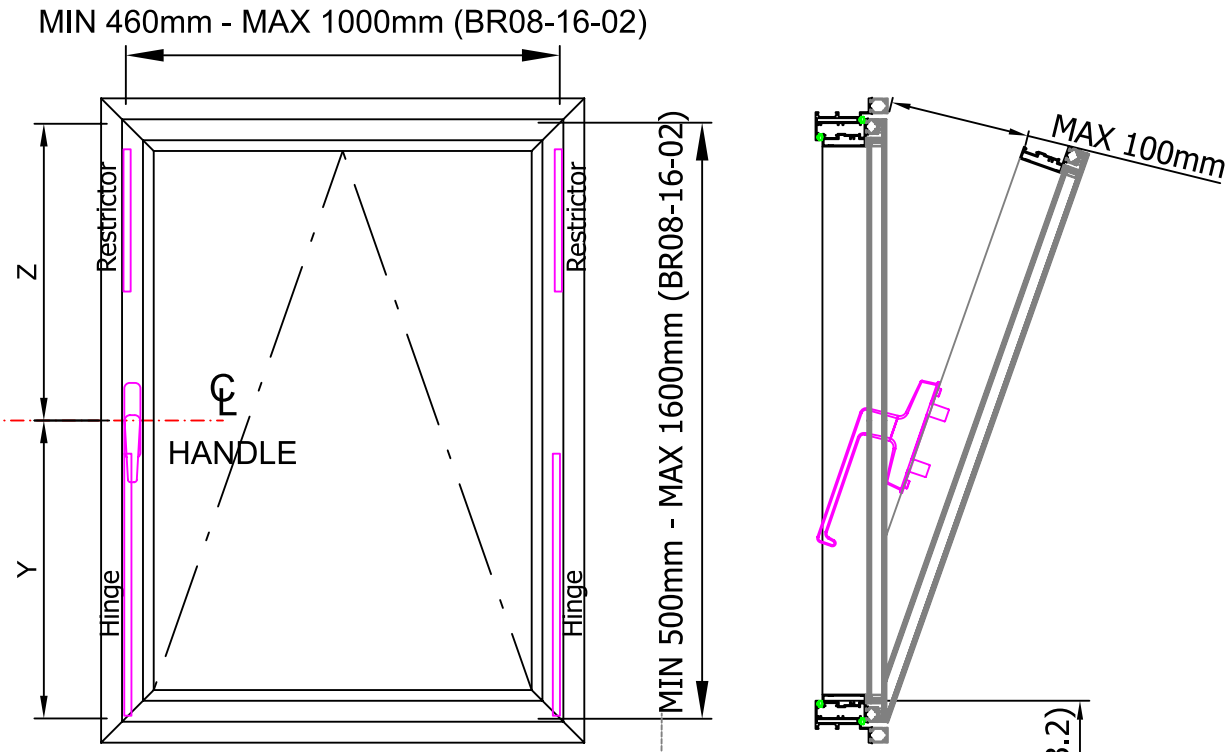


Dimension 'Y' should not be less than half of the shutter height

For full component list see sheet 44/13

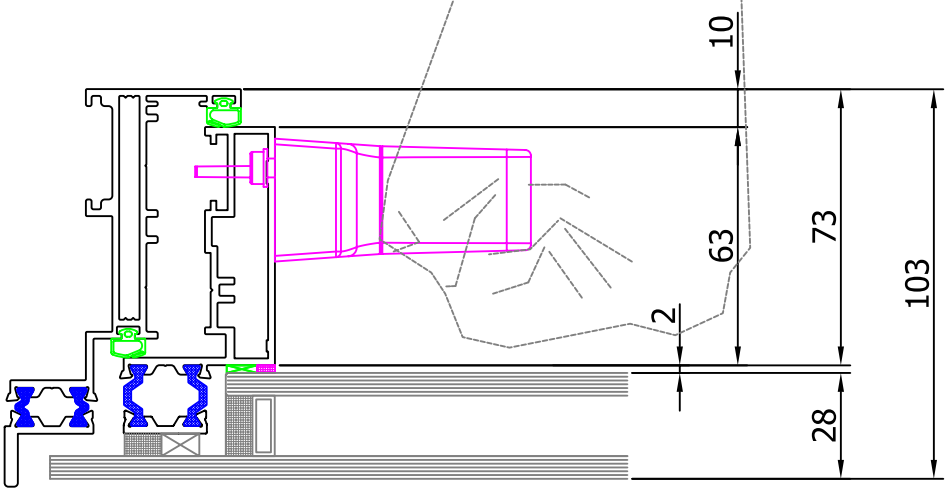

## Section44 - Bottom Hung Open Out Vents

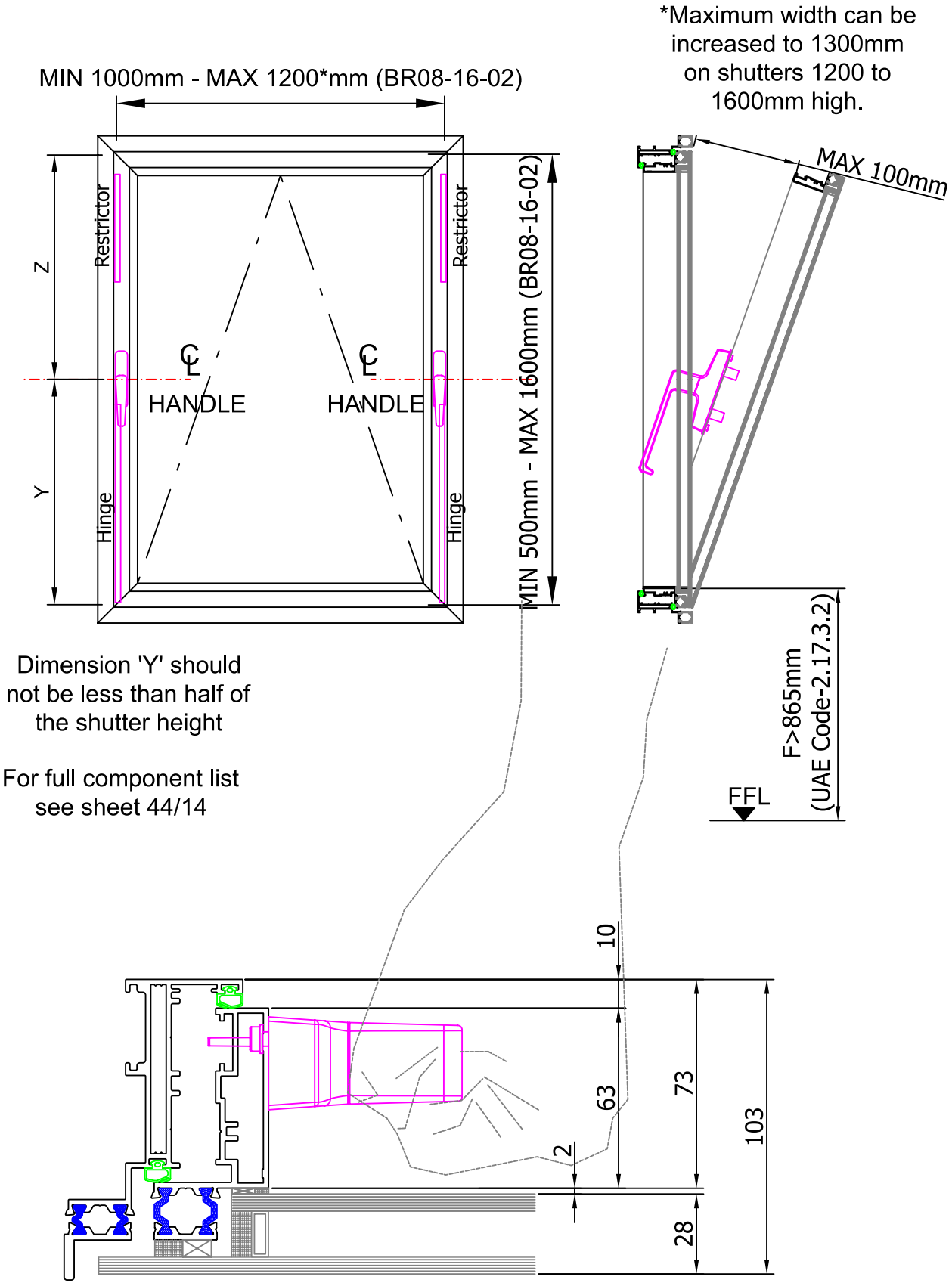


Dimension 'Y' should not be less than half of the shutter height

For full component list see sheet 44/14

## Section44 - Bottom Hung Open Out Vents

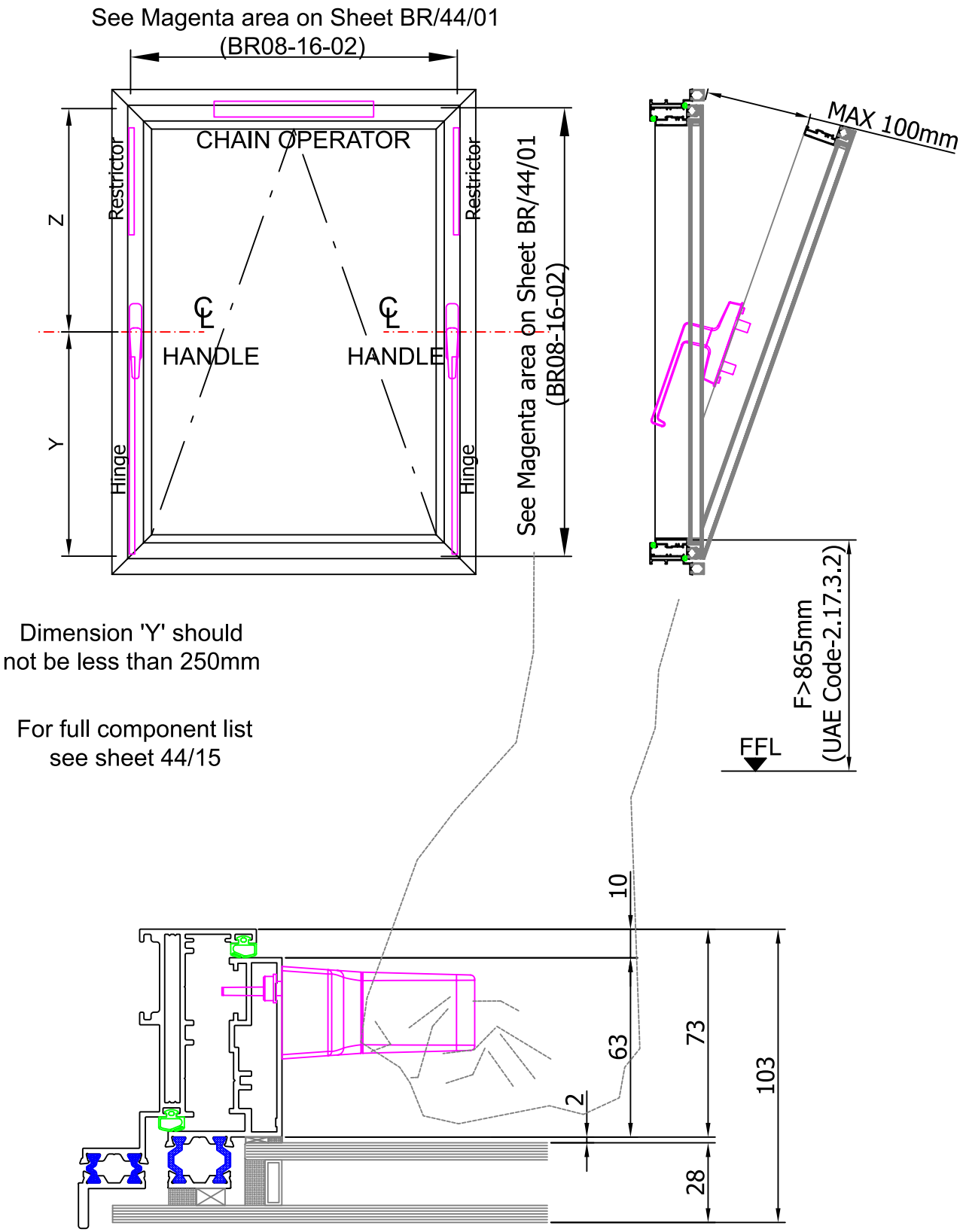


Dimension 'Y' should not be less than 250mm

For full component list see sheet 44/15

## Section44 - Bottom Hung Open Out Vents

Bracket
BR 1120.60

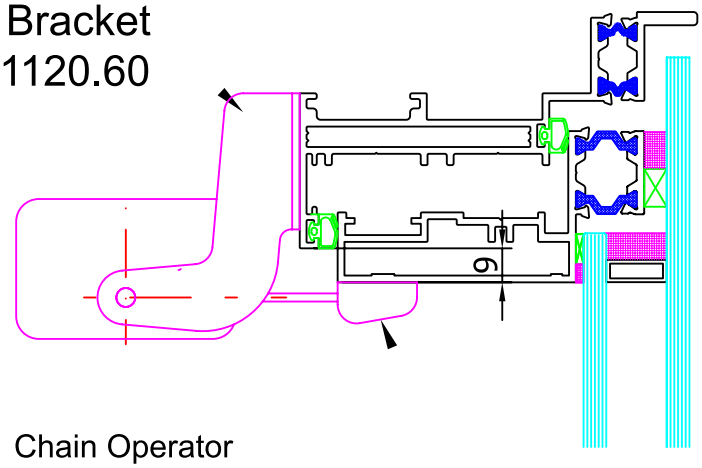


Chain Operator
BR-1120.5
24v DC
0.8mm Amp
18 Watts
(Power supply
Not by BRITAL)

Push Point
BR-1120.57

Bracket
BR 1120.60

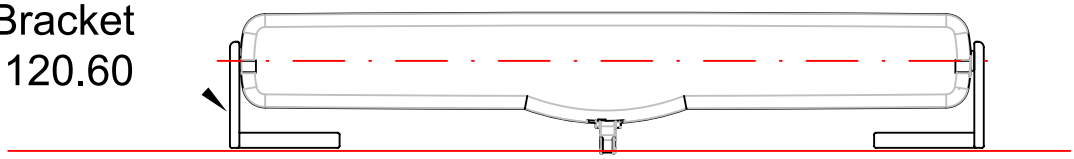

## Section44 - Bottom Hung Open Out Vents

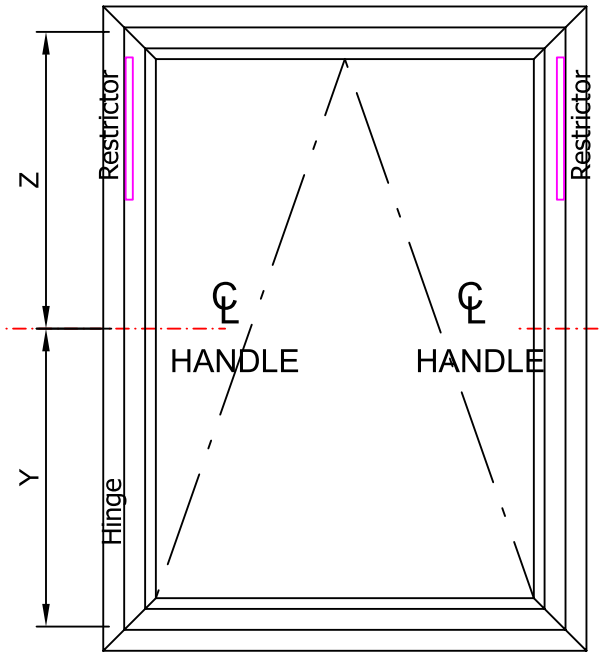


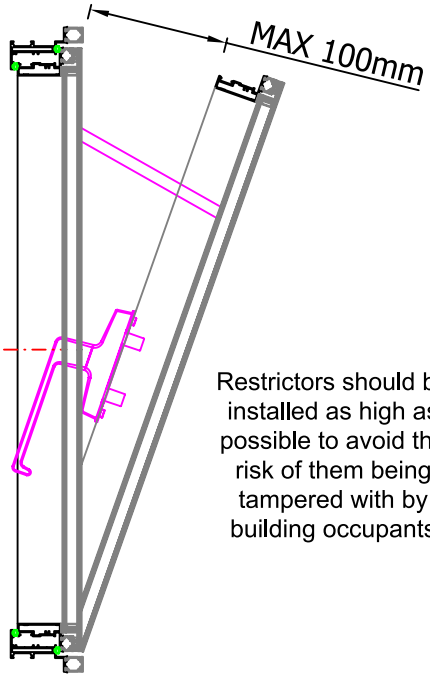


Restrictors should be installed as high as possible to avoid the risk of them being tampered with by building occupants

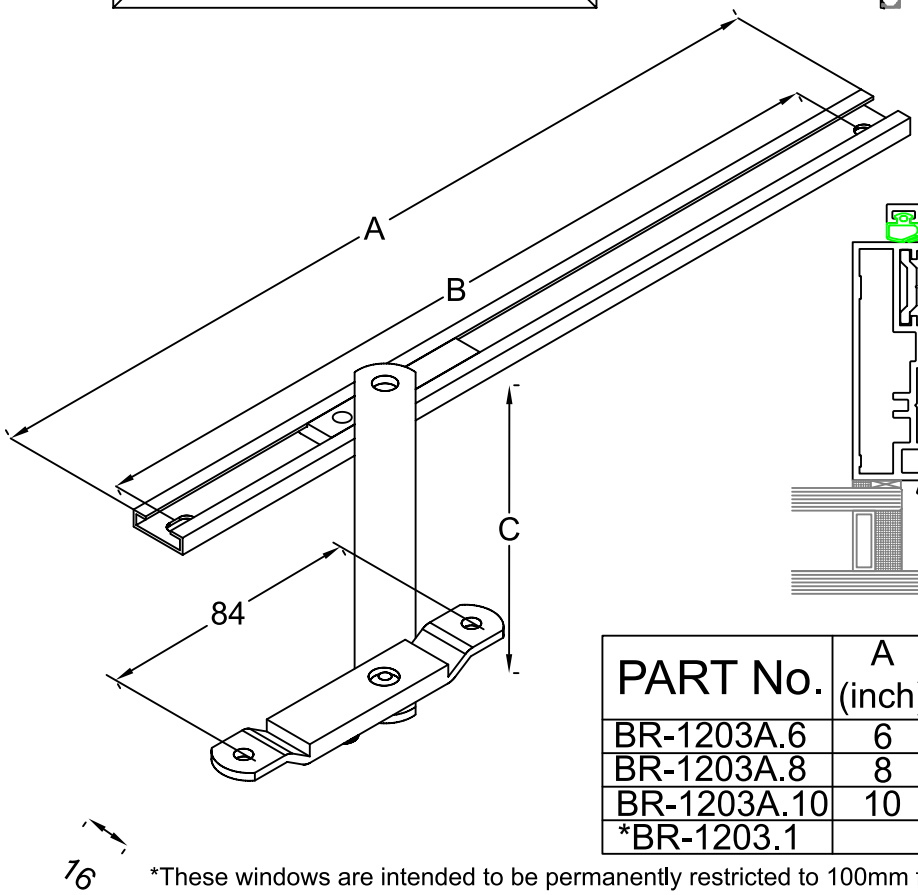


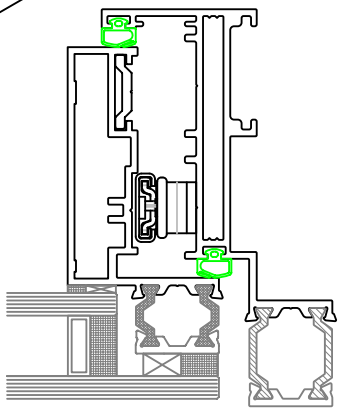

| PART No. | A (inch) | A (mm) | B | C |
|---|---|---|---|---|
| BR-1203A.6 | 6 | 150.5 | 131 | 85.4 |
| BR-1203A.8 | 8 | 201 | 184 | 152 |
| BR-1203A.10 | 10 | 254 | 236 | 180 |
| *BR-1203.1 | *Key | | | |

*These windows are intended to be permanently restricted to 100mm for safety therefore keys should not be supplied except for maintenance purposes

## Section44 - Bottom Hung Open Out Vents

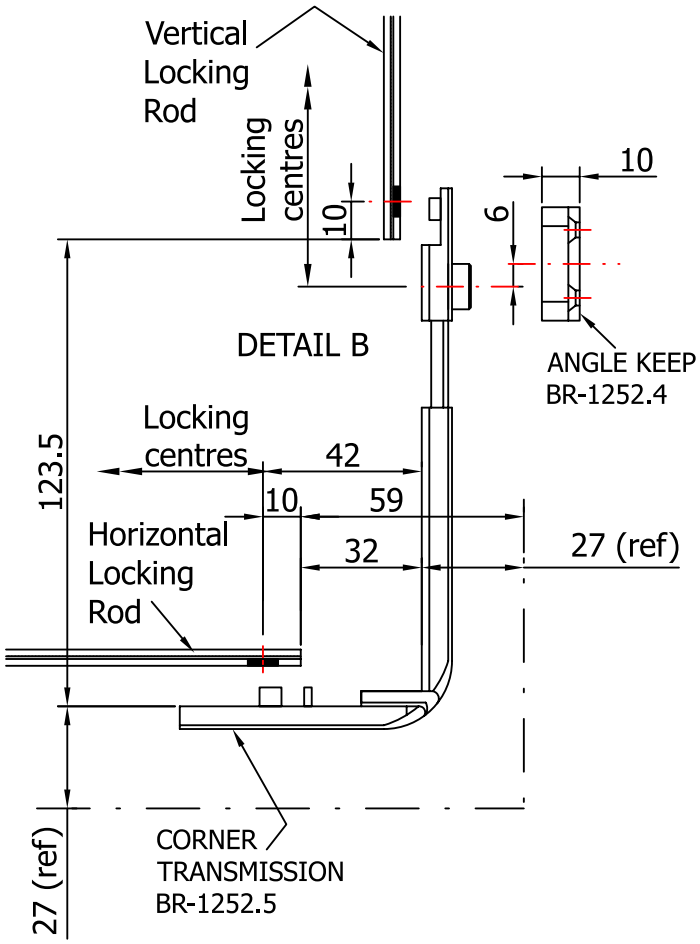


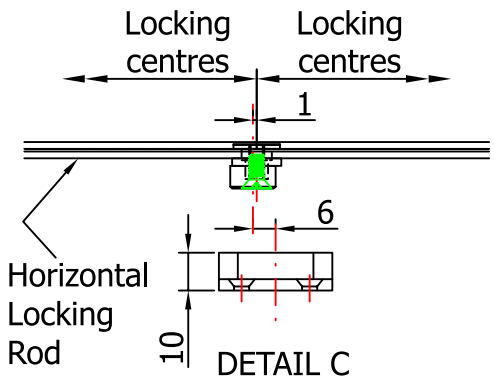


VERTICAL LOCKING ROD

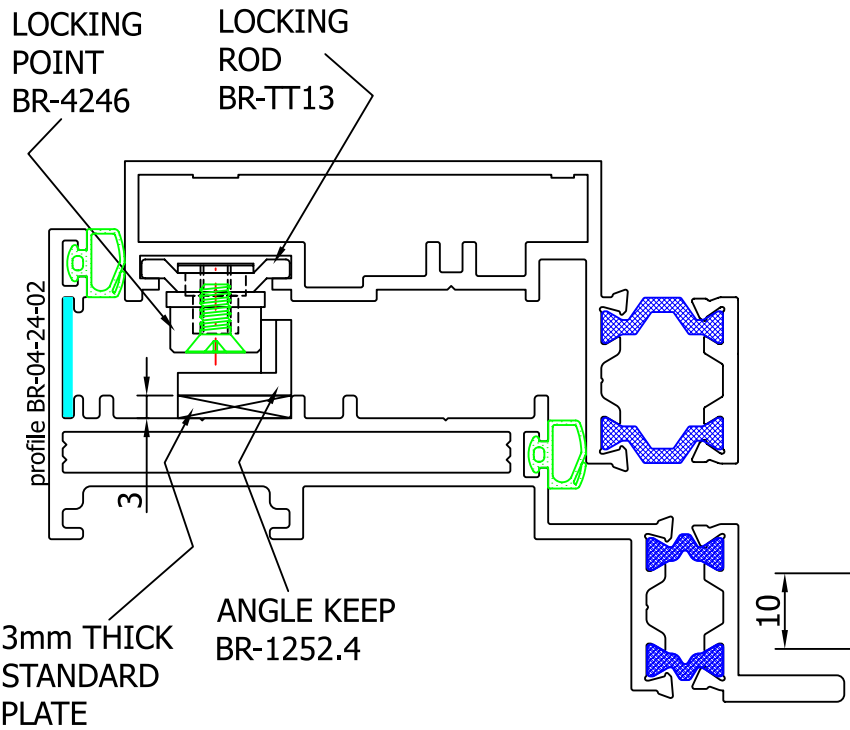


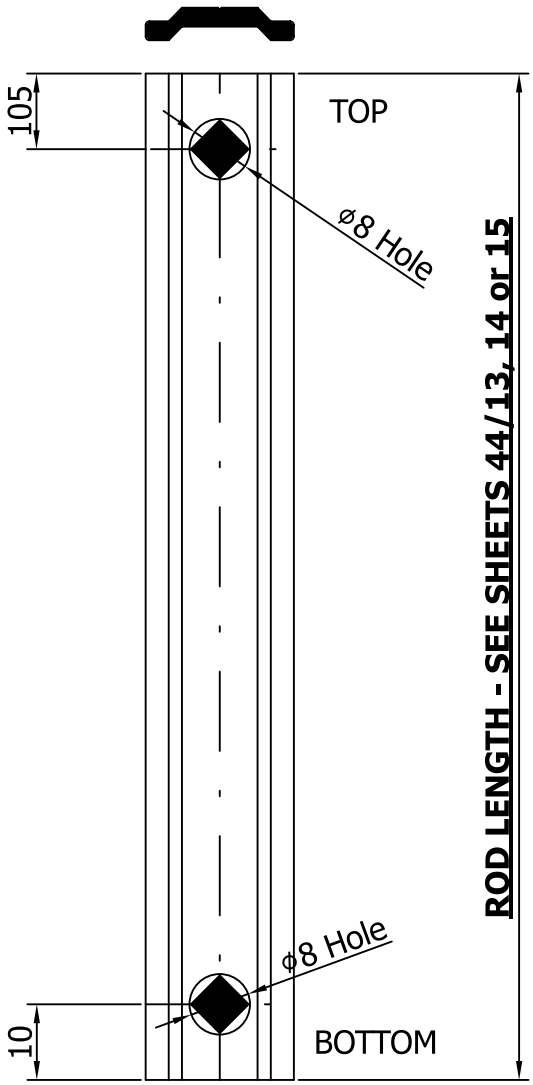

## Section44 - Bottom Hung Open Out Vents

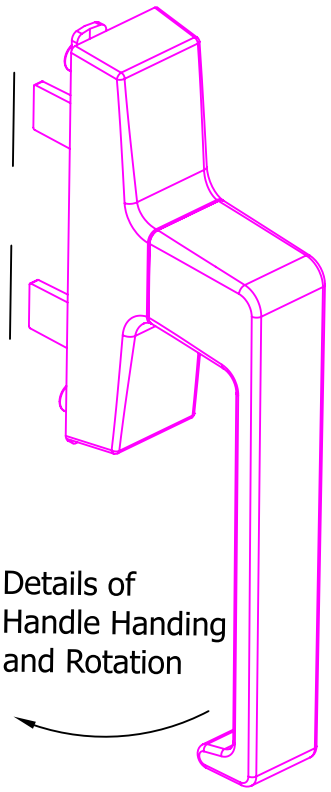


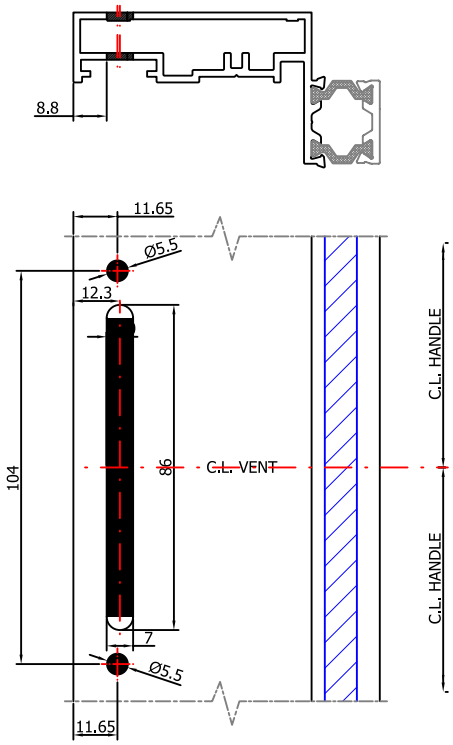


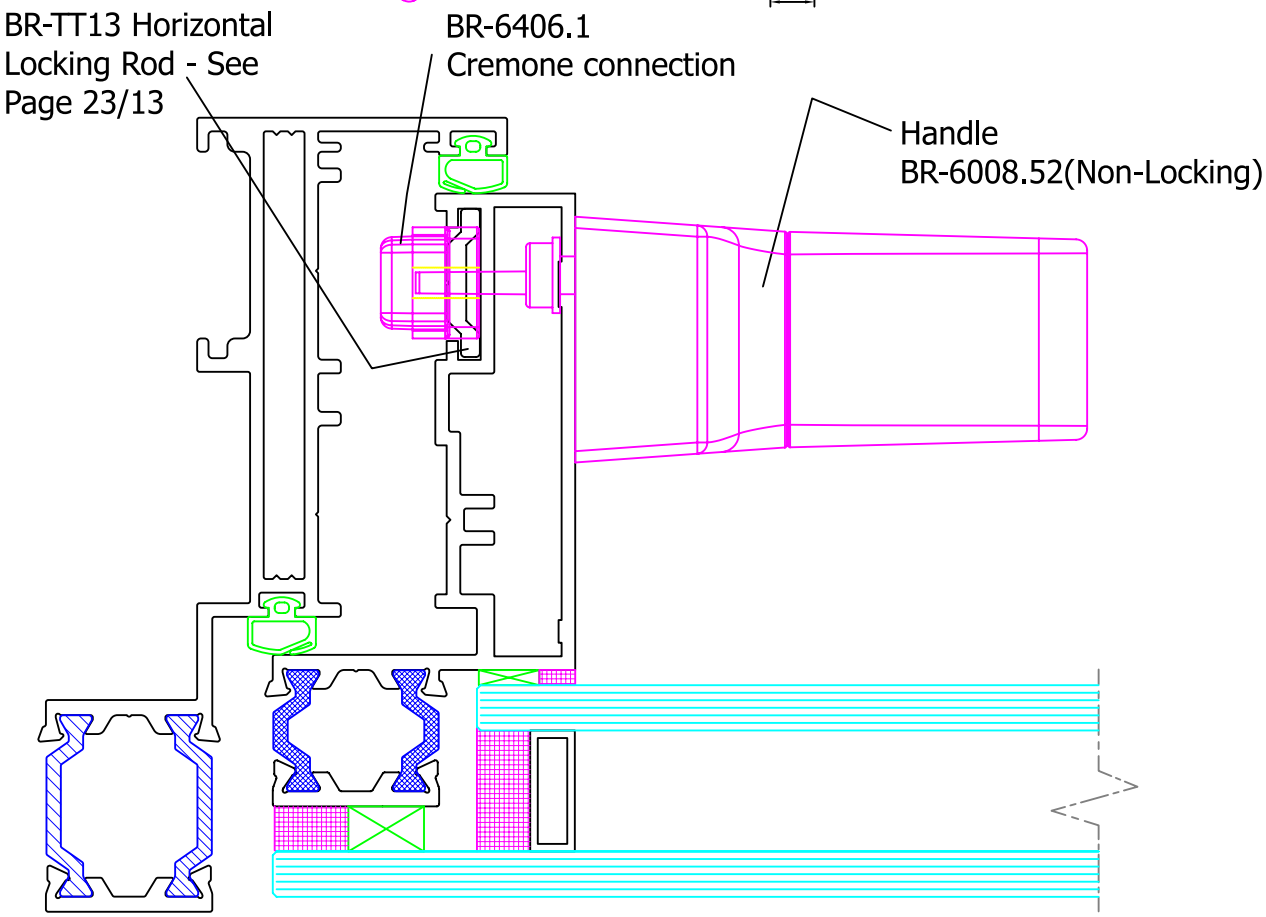

# Section44 - Bottom Hung Open Out Vents

## Hinge Fitting Application Drawing

A) The hinges MUST be fitted between two flat and parallel faces. The distance between the two faces must be 17mm (+ or -1mm)

B) The hinge must be positioned as shown for optimum performance.

C) The hinge should be fitted with the end cap located into the internal corner of the outer frame. All fixing holes/slots MUST be used. This will ensure optimum performance and weather sealing.

## Fixings

Use stainless steel No10 x 16mm long Pan Head self tapping screws to fix vent arm & track .

Maximum head sizes for fixing screws 3.5mm deep & 10mm diameter

Maximum shank diameter 5mm

Screws in both arm & track should be Austenitic stainless steel (A2 or A4).

## Maintenance of Friction Stays

The hinge in general and particularly thepivots, sliding shoe and track must be kept free from dirt, debris and any obstructions at all times. At the time of installation lubricate all pivot points with light machine oil and wipe away excess - one drop per pivot is sufficient. The manufacturer suggests one of the following lubricants or equivalent :- ER Howard 3 in 1 oil or Castrol Everyman.
Every year clean any dirt or debris from the hinge and clear any obstructions from the pivots sliding shoe and track. Apply lubrication as above. Check the tightness and security of all fixing screws and rivets. For hinges fitted in corrosive areas i. e. coastal locations refer to additional maintainance recommended by manufacturer.

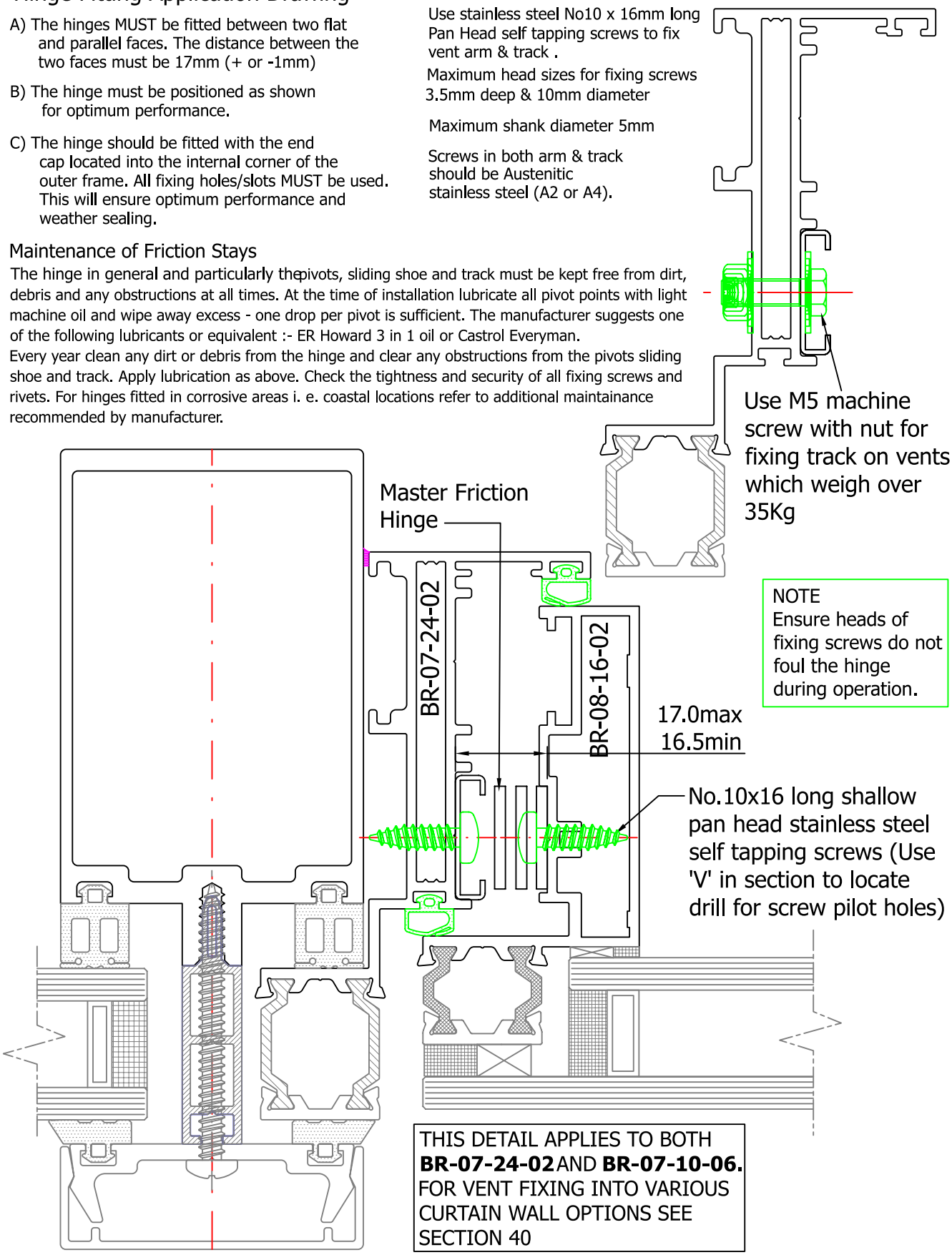


NOTE
Ensure heads of fixing screws do not foul the hinge during operation.

THIS DETAIL APPLIES TO BOTH **BR-07-24-02** AND **BR-07-10-06.** FOR VENT FIXING INTO VARIOUS CURTAIN WALL OPTIONS SEE SECTION 40

## Section44 - Bottom Hung Open Out Vents

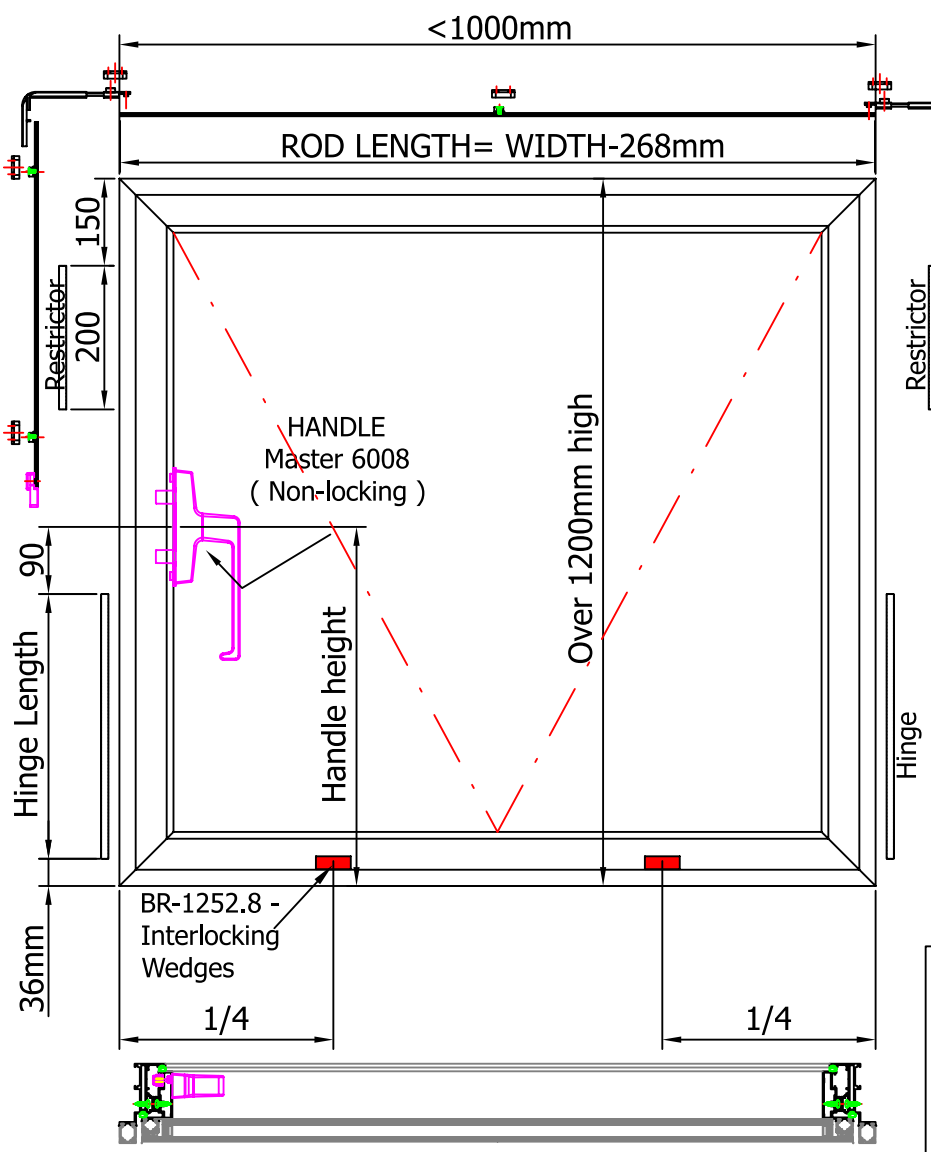


DETAIL B
(sheet No. 44/08)

Locking
Point
BR-4246

ROD LENGTH=
O/all frame height
-(handle height +130mm

| Hinge Referance | Minimum Handle Height (mm) | Maximum Handle Height (mm) |
|---|---|---|
| BR-1206.18<br>BR-1206.20<br>BR-1206.22<br>BR-1206.24<br>BR-1206.28 | 585<br>636<br>682<br>726<br>839 | Window Height Less 450 |

| | Height Over 1200mm |
|---|---|
| Hinges as Table (44/02) | 1No(pair). |
| BR-6008.52 Handle | 1No. |
| BR-6406.1 Connector | 1No.(pair) |
| BR-1252.4 Angle Keep | 7No. |
| BR-4246 Locking | 5No. |
| BR-1203 Restrictor | 2No. |
| BR-1252.5 Corner Trans | 2No. |
| BR-1252.8 Wedges | 2No. |

BR-1252.8 - One set of wedges

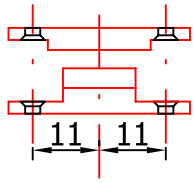


THIS DETAIL APPLIES TO BOTH **BR-07-24-02** AND **BR-07-10-06.** FOR VENT FIXING INTO VARIOUS CURTAIN WALL OPTIONS SEE SECTION 40

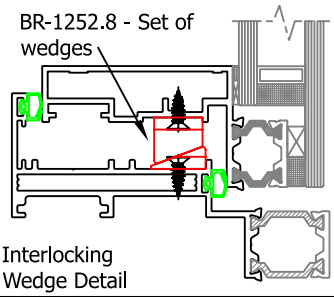


Interlocking
Wedge Detail

## Section44 - Bottom Hung Open Out Vents

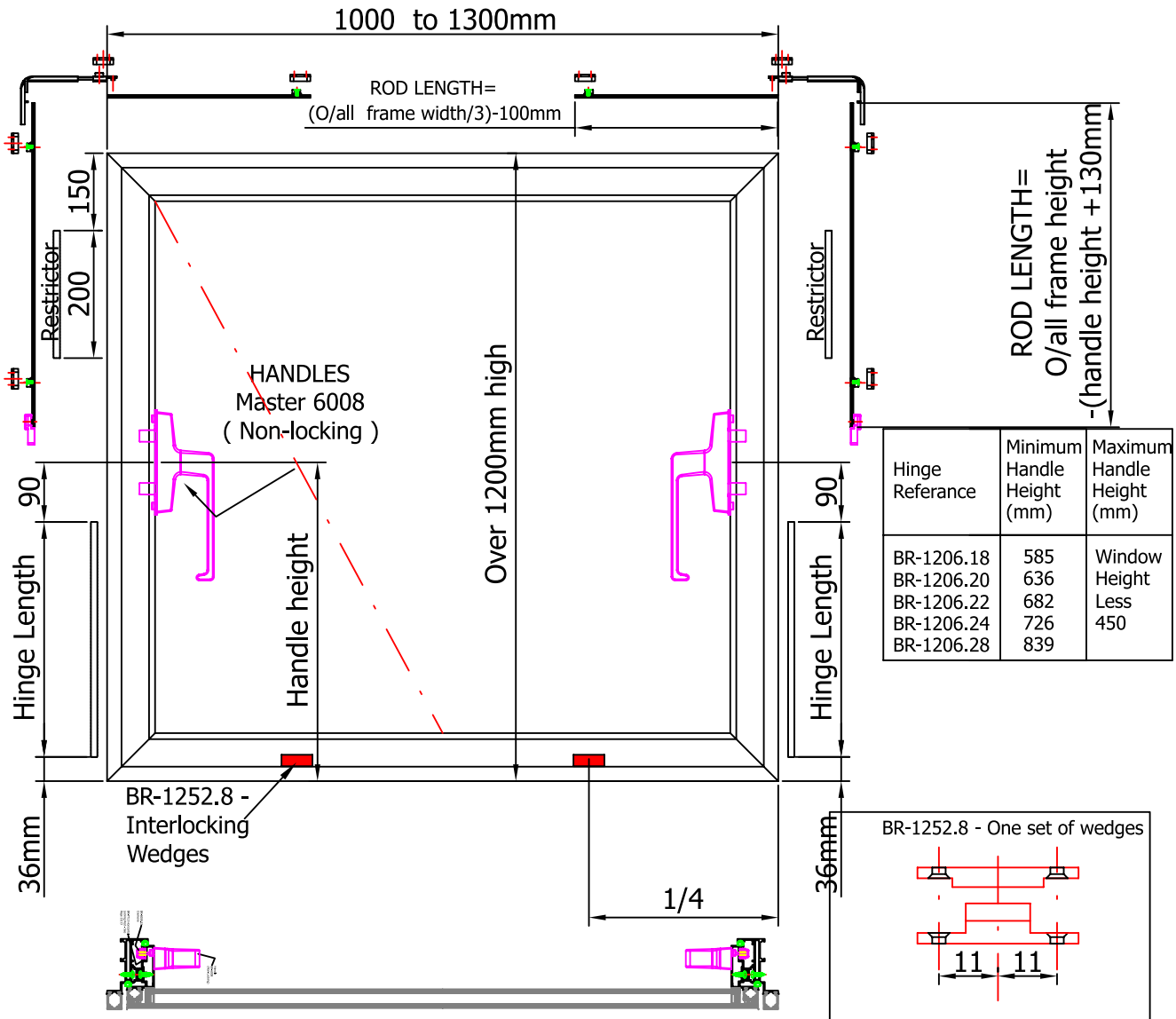


| Hinge Referance | Minimum Handle Height (mm) | Maximum Handle Height (mm) |
|---|---|---|
| BR-1206.18<br>BR-1206.20<br>BR-1206.22<br>BR-1206.24<br>BR-1206.28 | 585<br>636<br>682<br>726<br>839 | Window Height Less 450 |

BR-1252.8 - One set of wedges




THIS DETAIL APPLIES TO BOTH **BR-07-24-02** AND **BR-07-10-06.** FOR VENT FIXING INTO VARIOUS CURTAIN WALL OPTIONS SEE SECTION 40

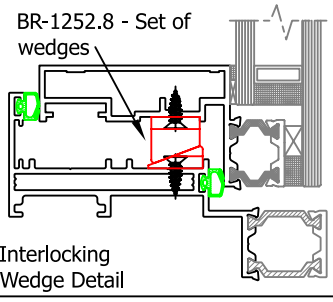


Interlocking Wedge Detail

| | Height Over 1200mm |
|---|---|
| Hinges as Table (44/02) | 1No(pair). |
| BR-6008.52 Handle | 2No. |
| BR-6406.1 Connector | 1No.(pair) |
| BR-1252.4 Angle Keep | 8No. |
| BR-4246 Locking | 6No. |
| BR-1203 Restrictor | 2No. |
| BR-1252.5 Corner Trans | 2No. |
| BR-1252.8 Wedges | 2No. |

## Section44 - Bottom Hung Open Out Vents

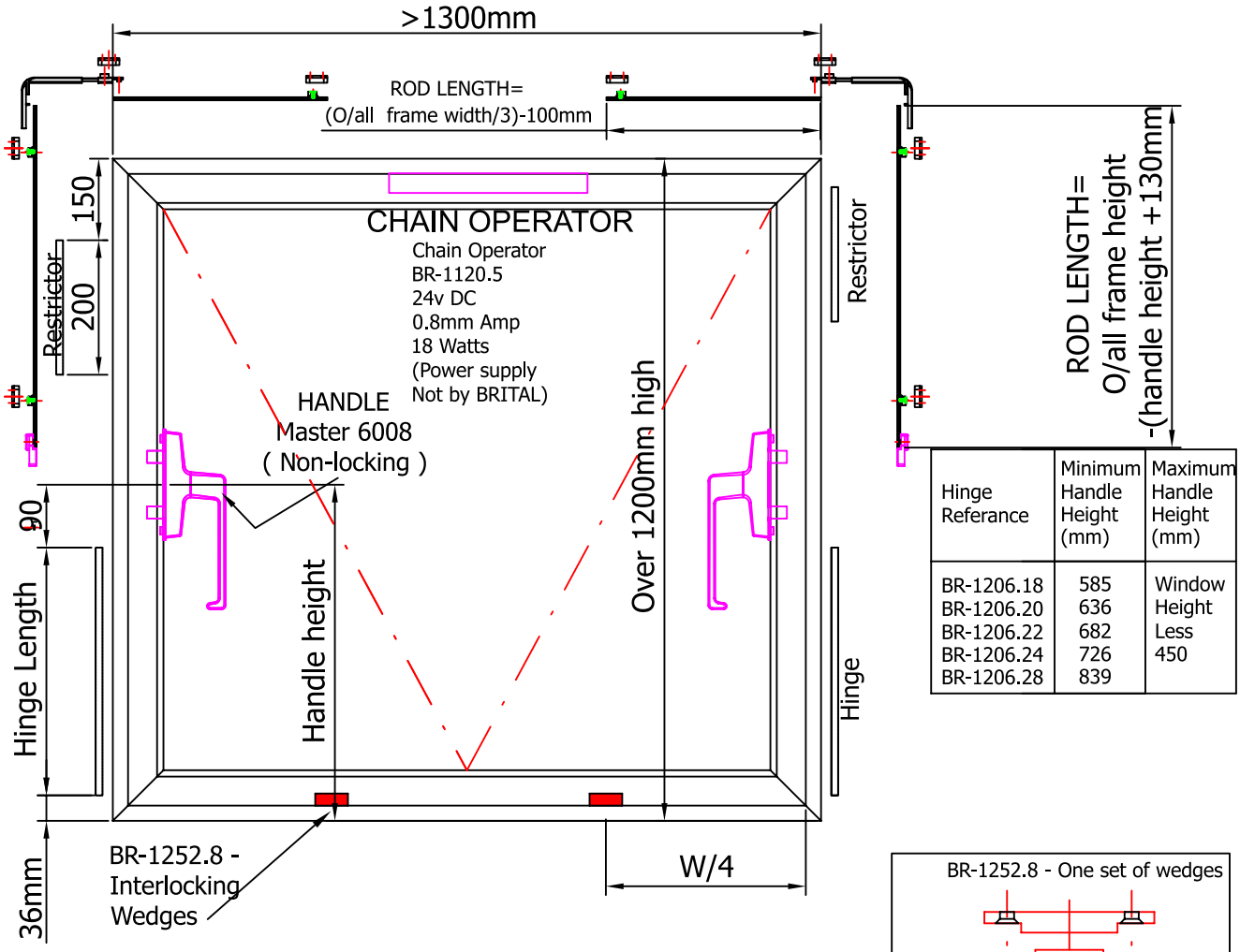


| Hinge Referance | Minimum Handle Height (mm) | Maximum Handle Height (mm) |
|---|---|---|
| BR-1206.18<br>BR-1206.20<br>BR-1206.22<br>BR-1206.24<br>BR-1206.28 | 585<br>636<br>682<br>726<br>839 | Window Height Less 450 |

Note: Handles must be released before operating Chain Operator

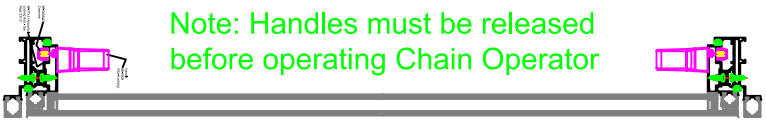

| | Height Over 1200mm |
|---|---|
| Hinges as Table (44/02) | 1No (pair). |
| BR-6008.52 Handle | 2No. |
| BR-6406.1 Connector | 1No.(pair) |
| BR-1252.4 Angle Keep | 8No. |
| BR-4246 Locking | 6No. |
| BR-1203 Restrictor | 2No. |
| BR-1252.5 Corner Trans | 2No. |
| BR-1252.8 Wedges | 2No. |
| BR-1120.5 Chain Operator | 1No. |
| BR-1120.60 Bracket | 1No (pair) |
| BR-1120.57 Push Point | 1No. |

BR-1252.8 - One set of wedges

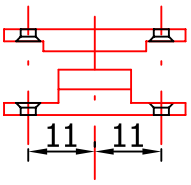


THIS DETAIL APPLIES TO BOTH **BR-07-24-02** AND **BR-07-10-06.** FOR VENT FIXING INTO VARIOUS CURTAIN WALL OPTIONS SEE SECTION 40

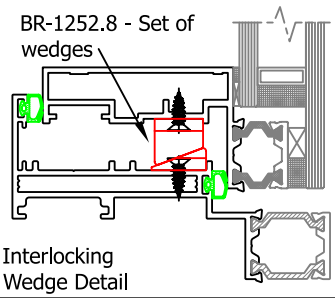


Interlocking Wedge Detail

## Section44 - Bottom Hung Open Out Vents

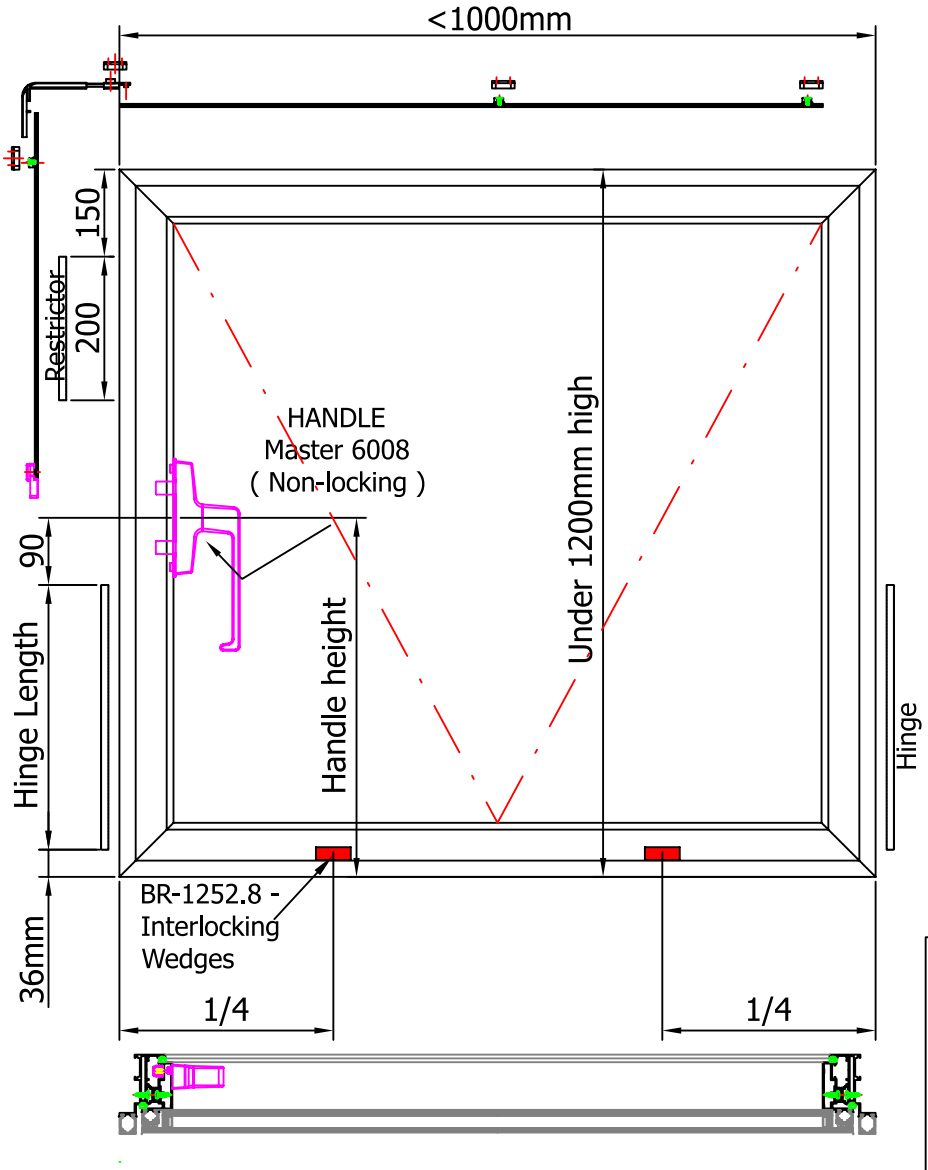


| Hinge Referance | Minimum Handle Height (mm) | Maximum Handle Height (mm) |
|---|---|---|
| BR-1206.10<br>BR-1206.12<br>BR-1206.14<br>BR-1206.16 | 387<br>437<br>362<br>537 | Window Height Less 450 |

| | Height Under 1200mm |
|---|---|
| Hinges as Table (44/02) | 1No(pair). |
| BR-6008.52 Handle | 1No. |
| BR-6406.1 Connector | 1No.(pair) |
| BR-1252.4 Angle Keep | 4No. |
| BR-4246 Locking | 3No. |
| BR-1203 Restrictor | 2No. |
| BR-1252.5 Corner Trans | 1No. |
| BR-1252.8 Wedges | 2No. |

BR-1252.8 - One set of wedges

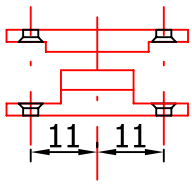


THIS DETAIL APPLIES TO BOTH **BR-07-24-02** AND **BR-07-10-06.** FOR VENT FIXING INTO VARIOUS CURTAIN WALL OPTIONS SEE SECTION 40

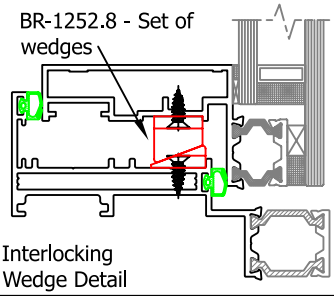


Interlocking Wedge Detail

## Section44 - Bottom Hung Open Out Vents

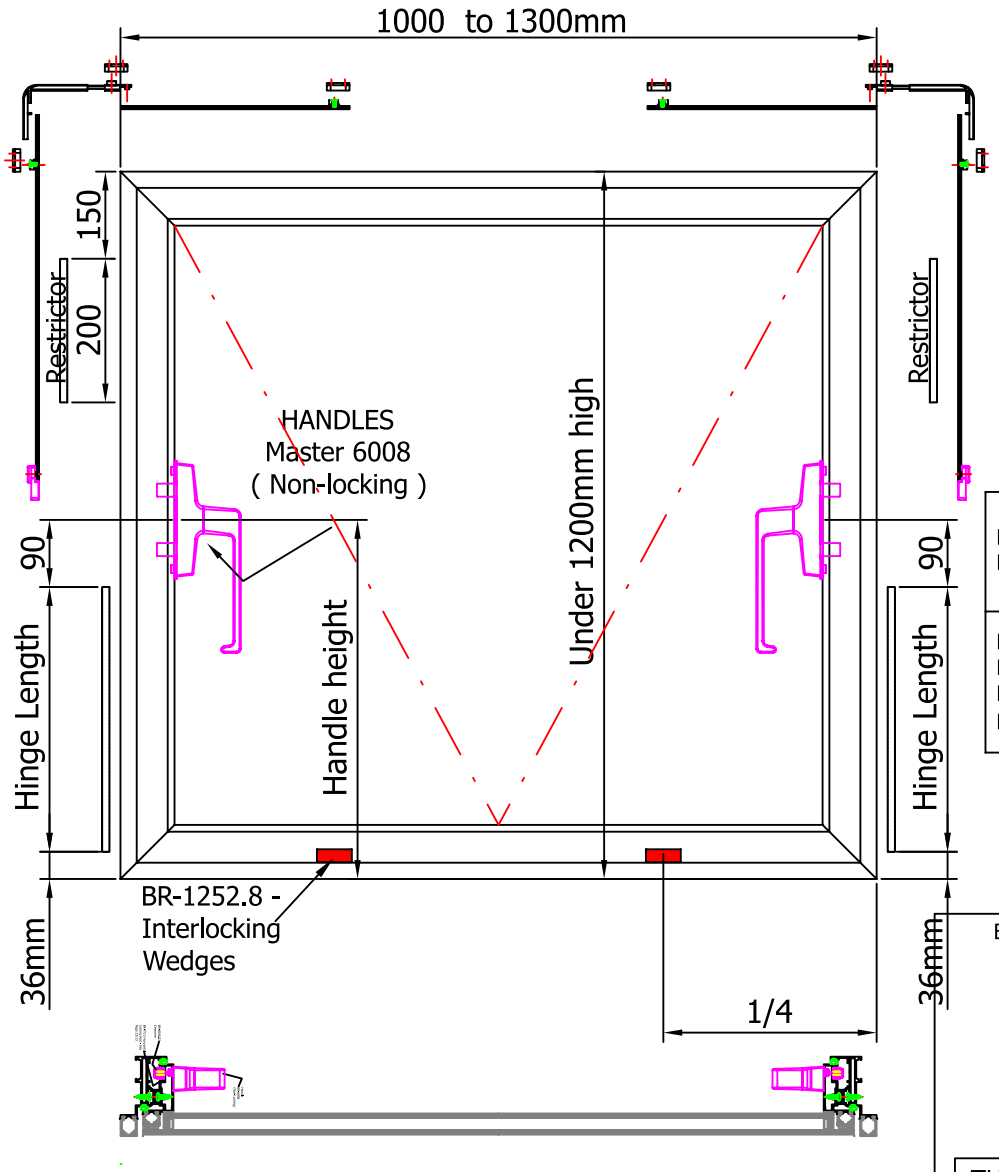


| Hinge Referance | Minimum Handle Height (mm) | Maximum Handle Height (mm) |
|---|---|---|
| BR-1206.10<br>BR-1206.12<br>BR-1206.14<br>BR-1206.16 | 387<br>437<br>362<br>537 | Window Height Less 450 |

BR-1252.8 - One set of wedges

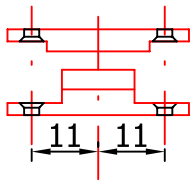


THIS DETAIL APPLIES TO BOTH **BR-07-24-02** AND **BR-07-10-06.** FOR VENT FIXING INTO VARIOUS CURTAIN WALL OPTIONS SEE SECTION 40

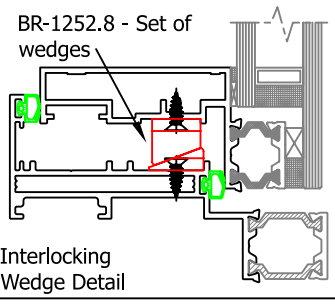


| | Height Under 1200mm |
|---|---|
| Hinges as Table (44/02) | 1No(pair). |
| BR-6008.52 Handle | 2No. |
| BR-6406.1 Connector | 1No.(pair) |
| BR-1252.4 Angle Keep | 6No. |
| BR-4246 Locking | 4No. |
| BR-1203 Restrictor | 2No. |
| BR-1252.5 Corner Trans | 2No. |
| BR-1252.8 Wedges | 2No. |

## Section44 - Bottom Hung Open Out Vents

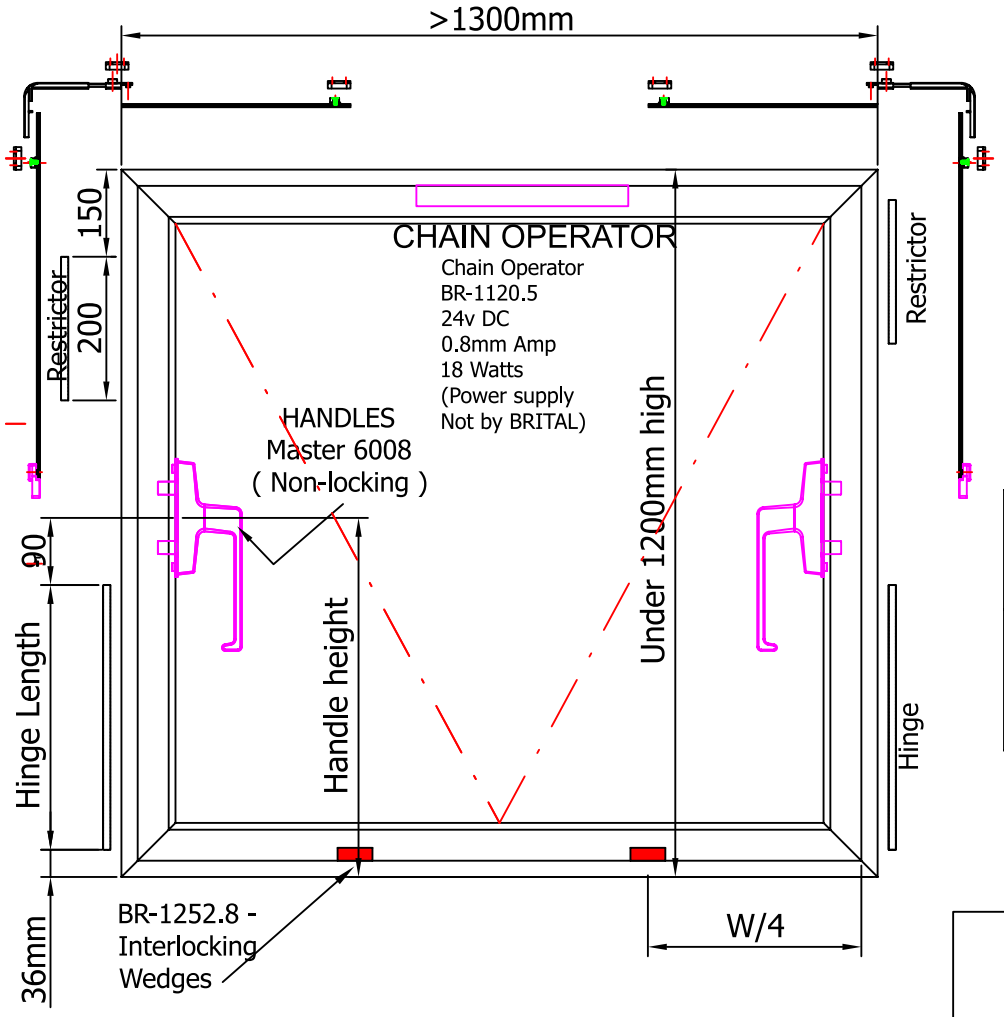


| Hinge Referance | Minimum Handle Height (mm) | Maximum Handle Height (mm) |
|---|---|---|
| BR-1206.10<br>BR-1206.12<br>BR-1206.14<br>BR-1206.16 | 387<br>437<br>362<br>537 | Window Height Less 450 |

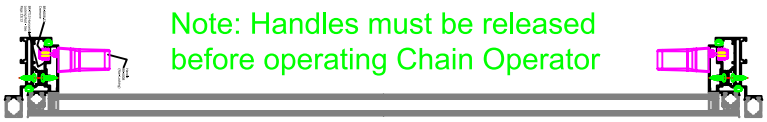

Note: Handles must be released before operating Chain Operator

| | Height Under 1200mm |
|---|---|
| Hinges as Table (44/02) | 1No (pair). |
| BR-6008.52 Handle | 2No. |
| BR-6406.1 Connector | 1No.(pair) |
| BR-1252.4 Angle Keep | 6No. |
| BR-4246 Locking | 4No. |
| BR-1203 Restrictor | 2No. |
| BR-1252.5 Corner Trans | 2No. |
| BR-1252.8 Wedges | 2No. |
| BR-1120.5 Chain Operator | 1No. |
| BR-1120.60 Bracket | 1No (pair) |
| BR-1120.57 Push Point | 1No. |

BR-1252.8 - One set of wedges

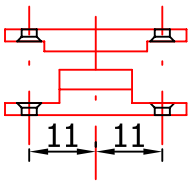


THIS DETAIL APPLIES TO BOTH **BR-07-24-02** AND **BR-07-10-06.** FOR VENT FIXING INTO VARIOUS CURTAIN WALL OPTIONS SEE SECTION 40

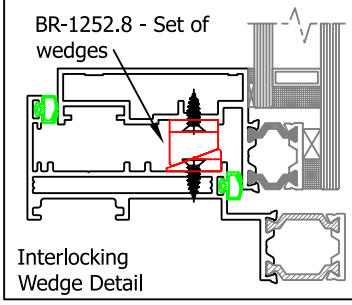

## Section50 - Bar Machining & Preparation

***Mullion***
Mullions are cut to suit structural dimensions which should be determined from the contractors drawings.

***2 Part Transom & Backs***
Transom length = Mullion centres - less 12mm
Transom Back Length = Mullion centres - less 57mm

***Gasket*** (allow 0.5% over length )
Transom gasket = Mullion centres - less 20mm ( + 5mm per 1000mm )
Mullion gasket = Transom centres - less 52mm ( + 5mm per 1000mm )

***Pressure Plate and Cap***
Mullion pressure plate = Transom centres - less 2mm
(Except at head & cill = Transom centres plus 27mm)
Transom pressure plate = Mullion centres - less 60mm
Mullion cap = Length to suit.
Transom cap = Mullion centres - less 57mm

***Thermal Break***
Mullion = Mullion length
***Transom = Transom length***

***Pressure Plate Gaskets*** (allow 0.5% over length)
Mullion
Length of Mullion Pressure Plate (plus 0.5%)
Transom
Transom Centres - less 57 (plus 0.5%)

***Single Glaze Adapter*** (where required)
Transom centres - less 53mm

***Fixed Light Glass Size***
Mullion centres - less 24mm
***Transom centres - less 24mm***

## Section50 - Bar Machining & Preparation

***Mullion***

Mullions are cut to suit structural dimensions which should be determined from contractors drawings.

***Transom & Backs***

Transom length = Mullion centres - less 12mm
Transom Back Length = Mullion centres - less 57mm

***Gasket***

Transom gasket = Mullion centres - less 20mm (plus 0.5%)
Mullion gasket = Transom centres - less 52mm (plus 0.5%)

***Thermal Break***

Mullion = Mullion length

***Fixed Light Glass Size***

Mullion centres - less 21mm
Transom centres - less 21mm

## Section50 - Bar Machining & Preparation

***Pressure Plate & Cap***

Either:-
Transom pressure plate = Mullion centres - less 3mm
Transom cap = Mullion centres - less 1.5mm
Or:-
* Transom pressure plate = Length to suit. (allow 1.5mm/m for thermal expansion)
* Transom cap = Length to suit. (allow 1.5mm/m for thermal expansion)

* Where the transom pressure plates and caps are continuous drainage slots should be provided at 600mm centres.

## Section50 - Bar Machining & Preparation

***Pressure Plate & Cap***

Mullion pressure plate = Transom centres - less 2mm
(Except at head & cill = Transom centres plus 27mm)
Mullion cap = Length to suit.

***Thermal Break***

Mullion = Mullion length
Transom = Transom length

***Pressure Plate Gaskets***

Mullion =
Length of Mullion Pressure Plate (plus 0.5%)

## Section50 - Bar Machining & Preparation

***Mullion***

Mullions are cut to suit structural dimensions which should be determined from contractors drawings.

***Transom & Backs***

Transom length = Mullion centres - less 12mm
Transom Back Length = Mullion centres - less 57mm

***Gasket*** (allow 0.5% over length)

Transom gasket = Mullion centres - less 20mm (plus 0.5%)
Mullion gasket = Transom centres - less 52mm (plus 0.5%)

***Thermal Break***

Mullion = Mullion length
Transom = Transom length

## Section50 - Glazing Options - Capped

For ease of use this section has been arranged so that the relevant sheet number directly relates to the glazing thickness.
For example the arrangement for glazing a 28mm units is shown on sheet 28. Section 60 deals with capped glazing, section 61 deals with silicone glazing and section 62 deals with the carrier frame section.

Where the required glazing is not indicated refer to BRITAL's technical department

## Section60 - Glazing Options - Capped

### GLAZING APPLICATION TO MULLION & VENT FRAMES

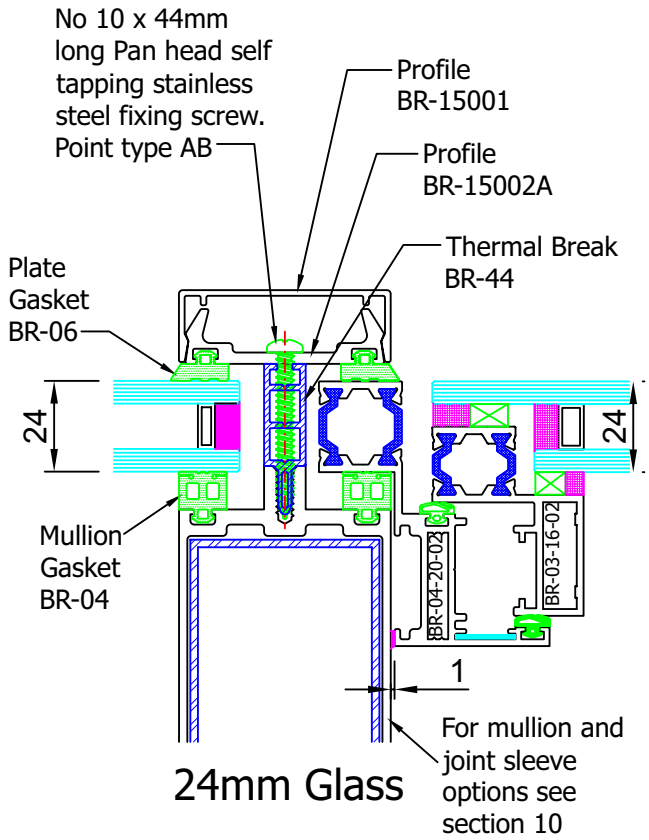


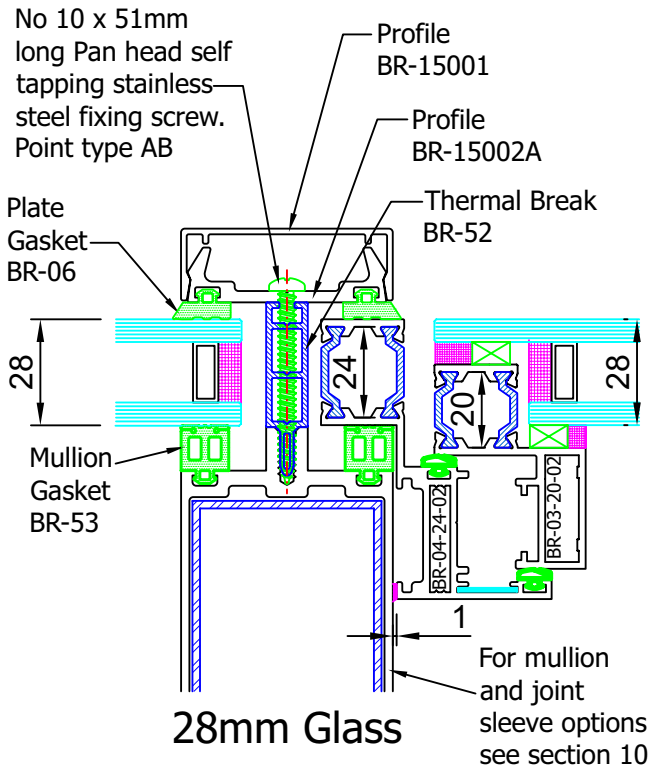


### GLAZING APPLICATION TO TRANSOM & VENT FRAMES

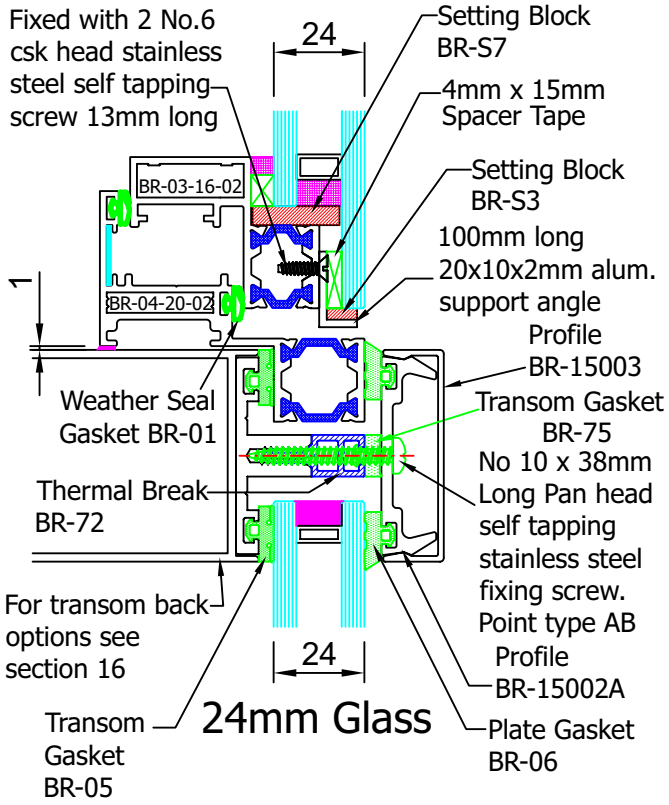


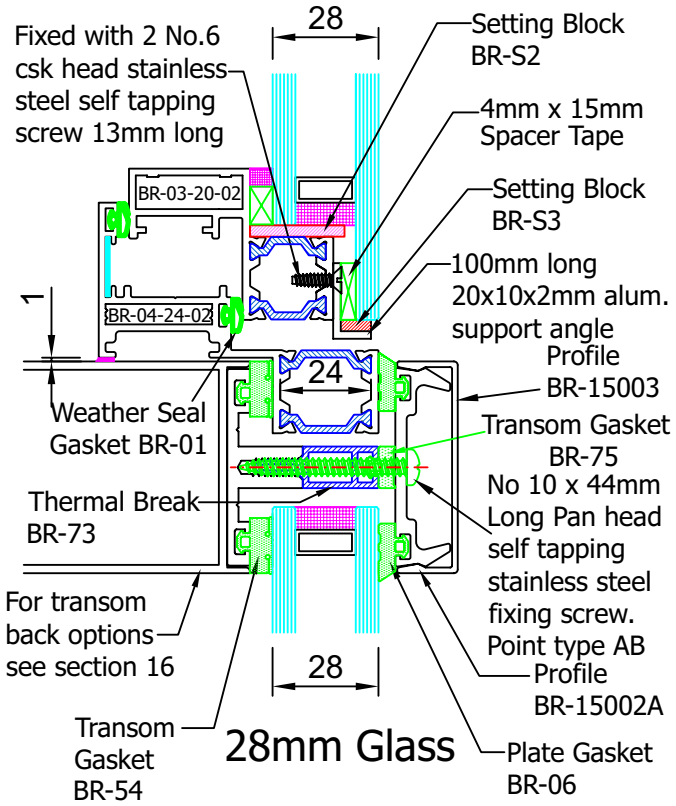

## Section60 - Glazing Options - Capped

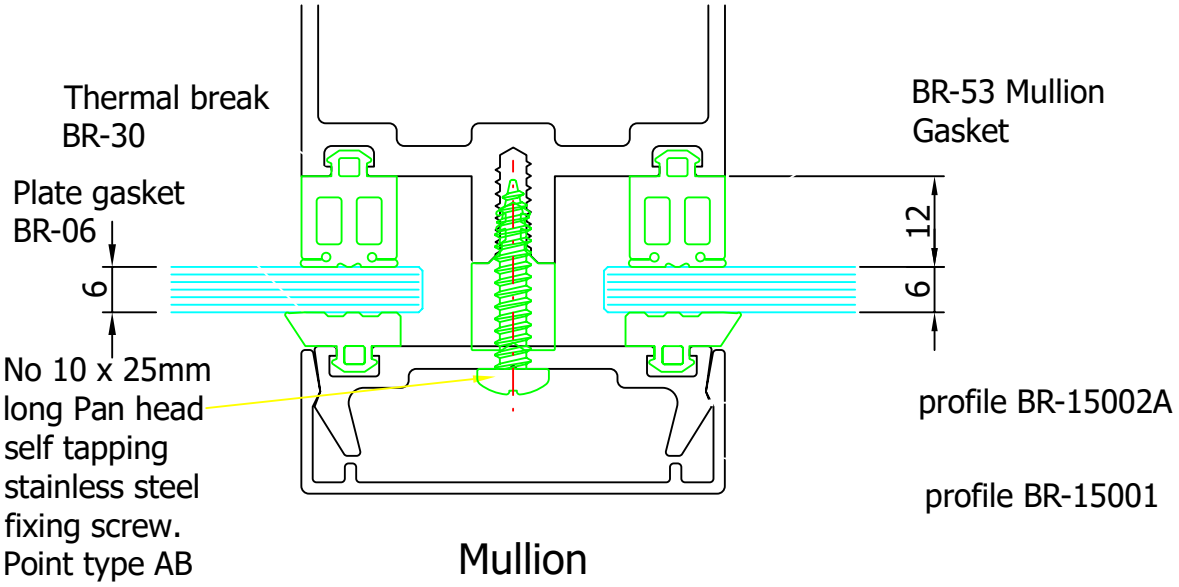


Mullion

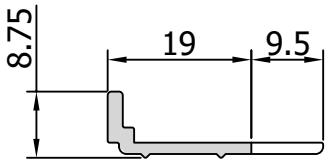


Cut from BR-GS1

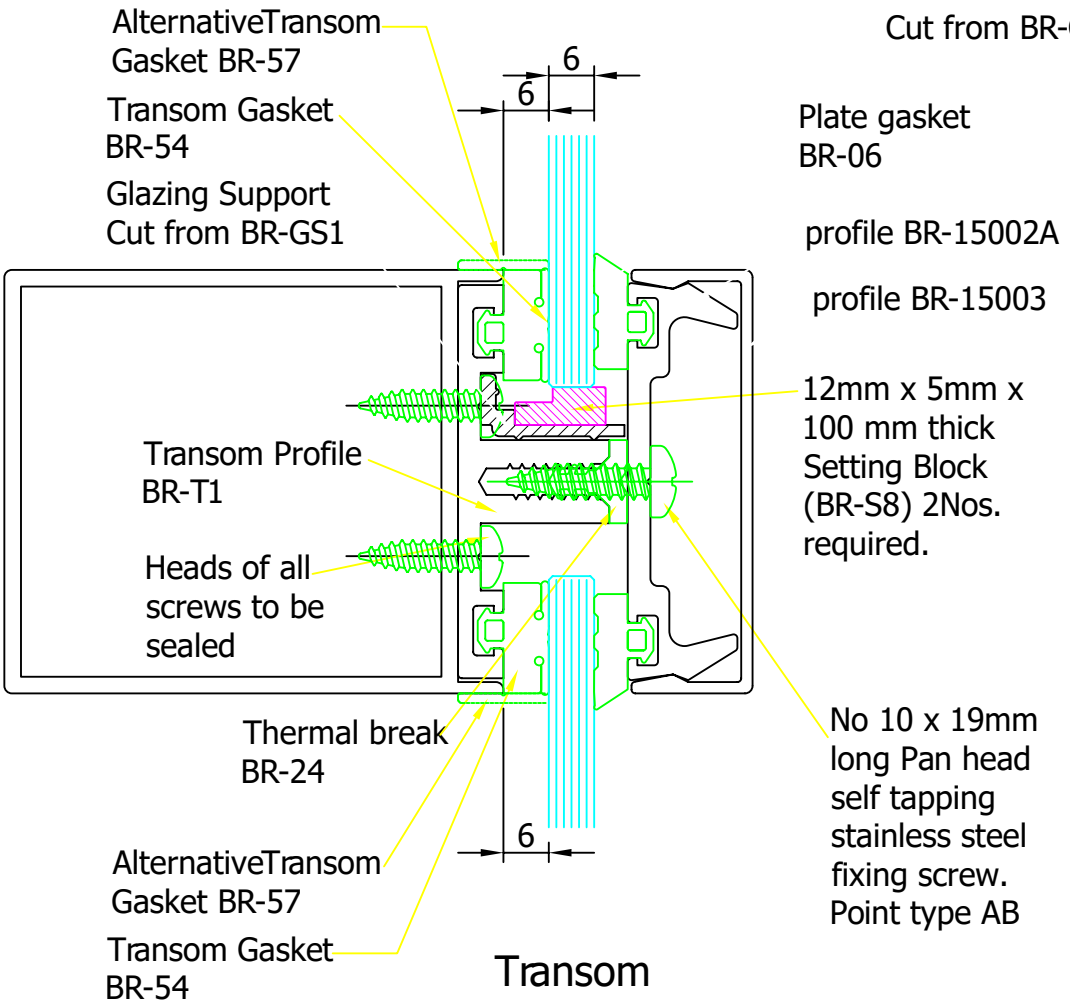


Transom

## Section60 - Glazing Options - Capped

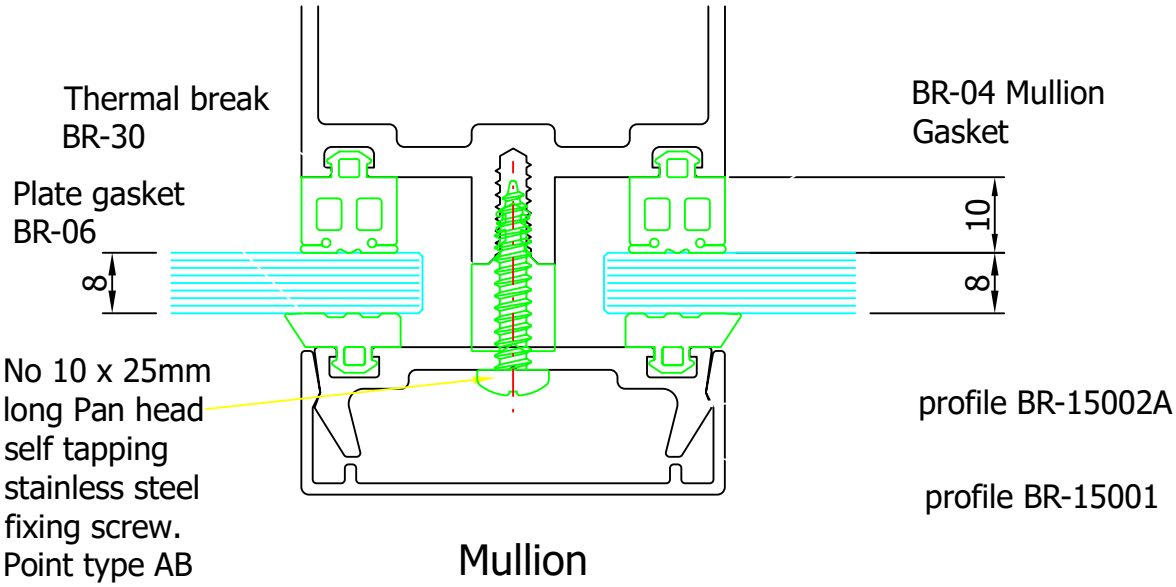


Mullion

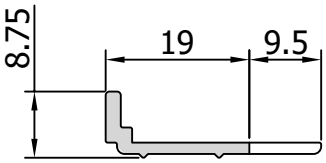


Cut from BR-GS1

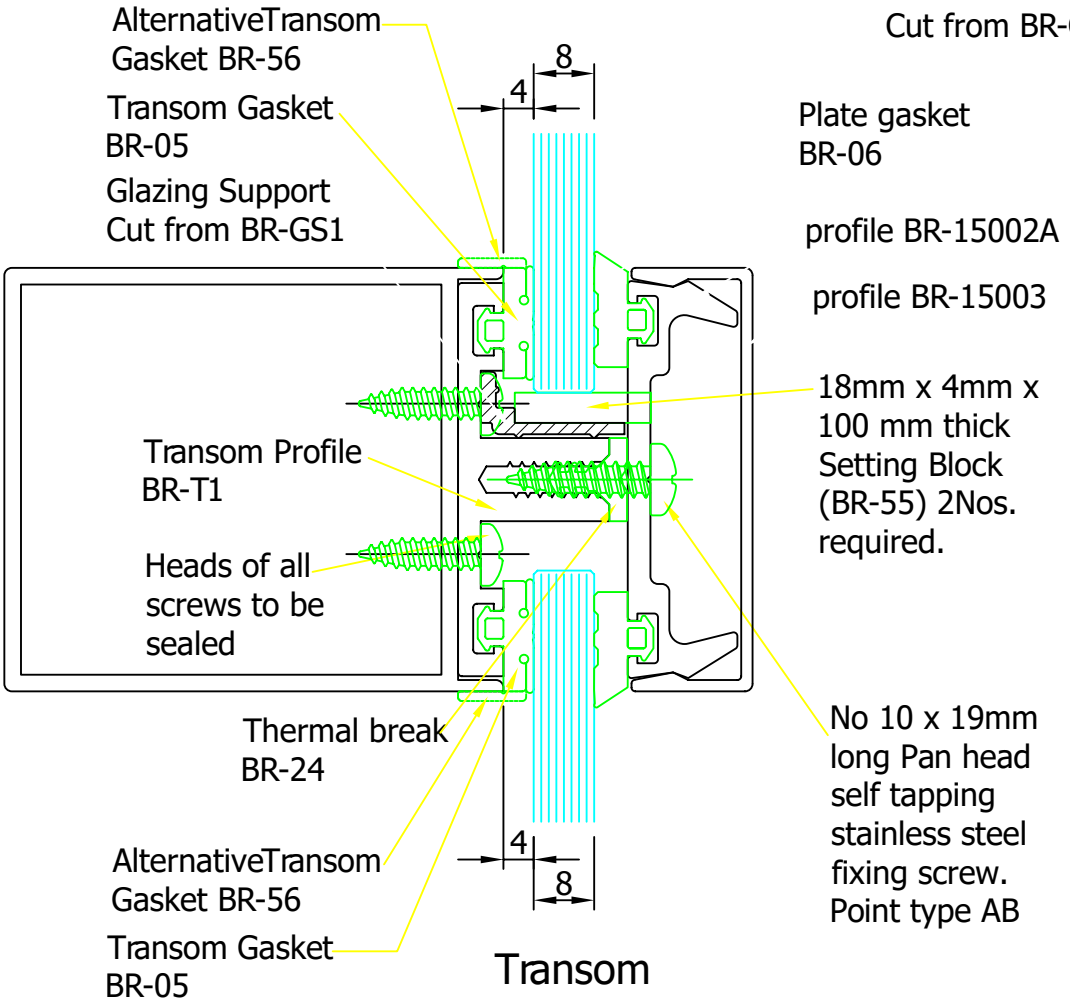


Transom

## Section60 - Glazing Options - Capped

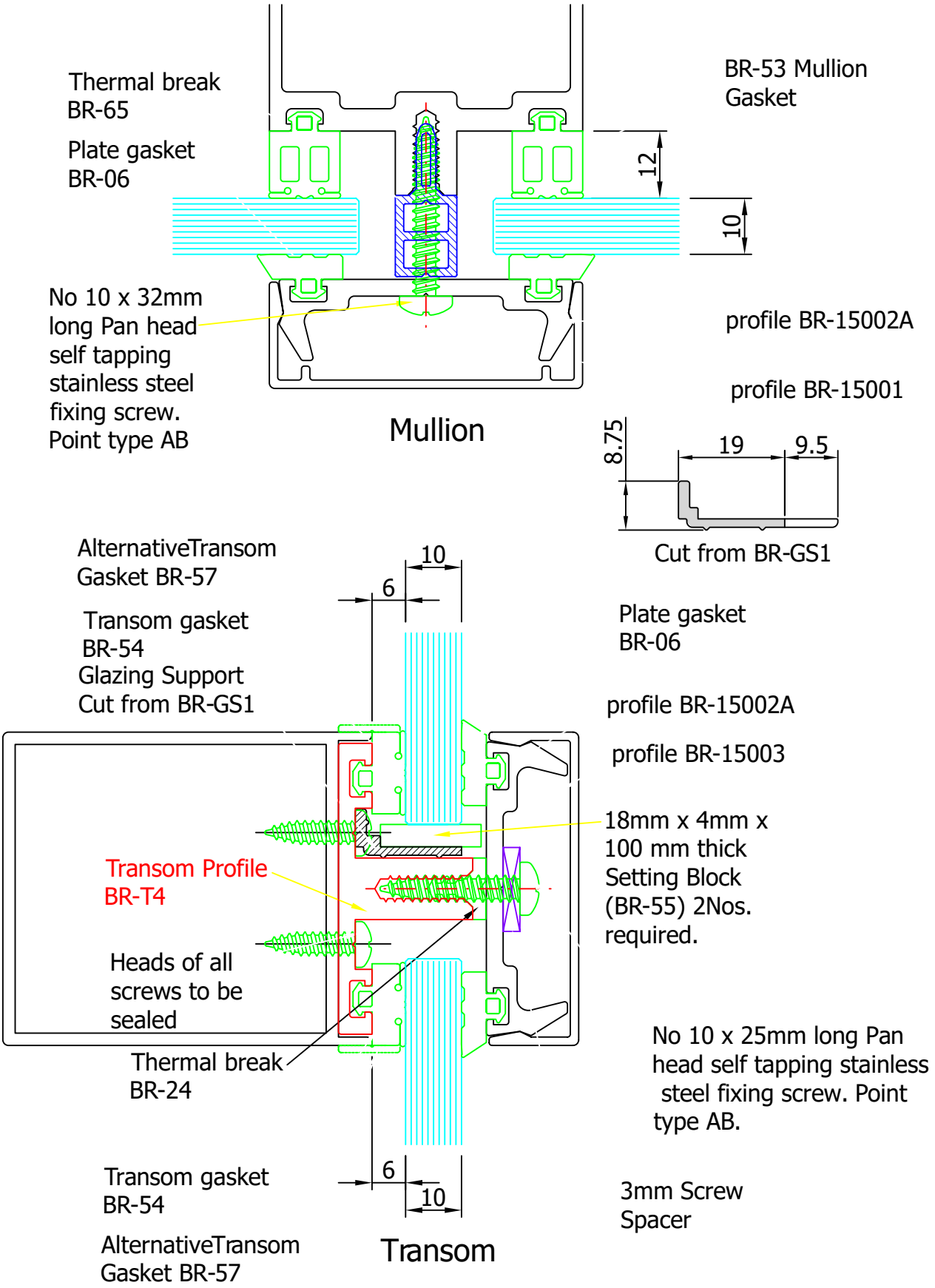

## Section60 - Glazing Options - Capped

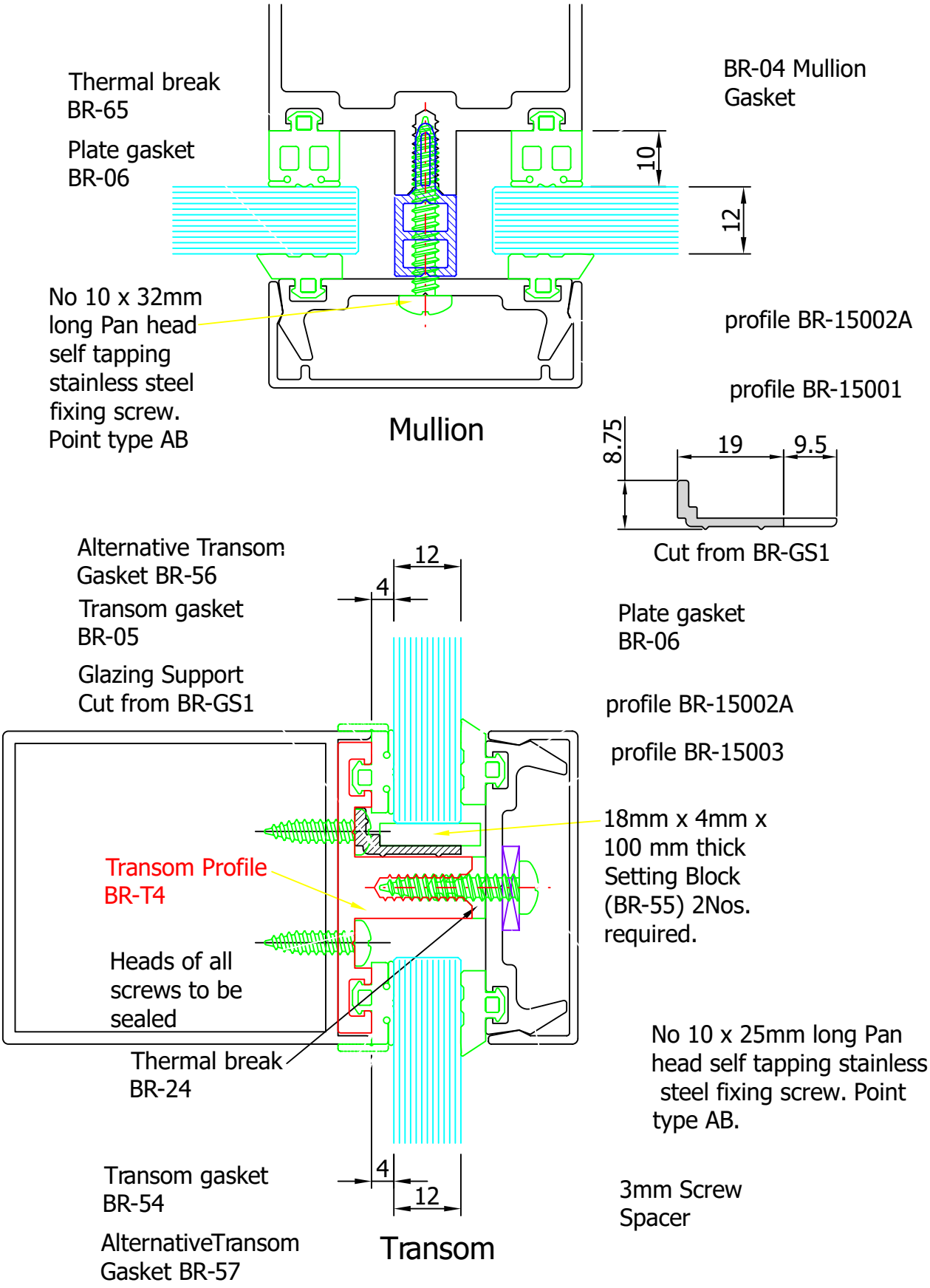

## Section60 - Glazing Options - Capped

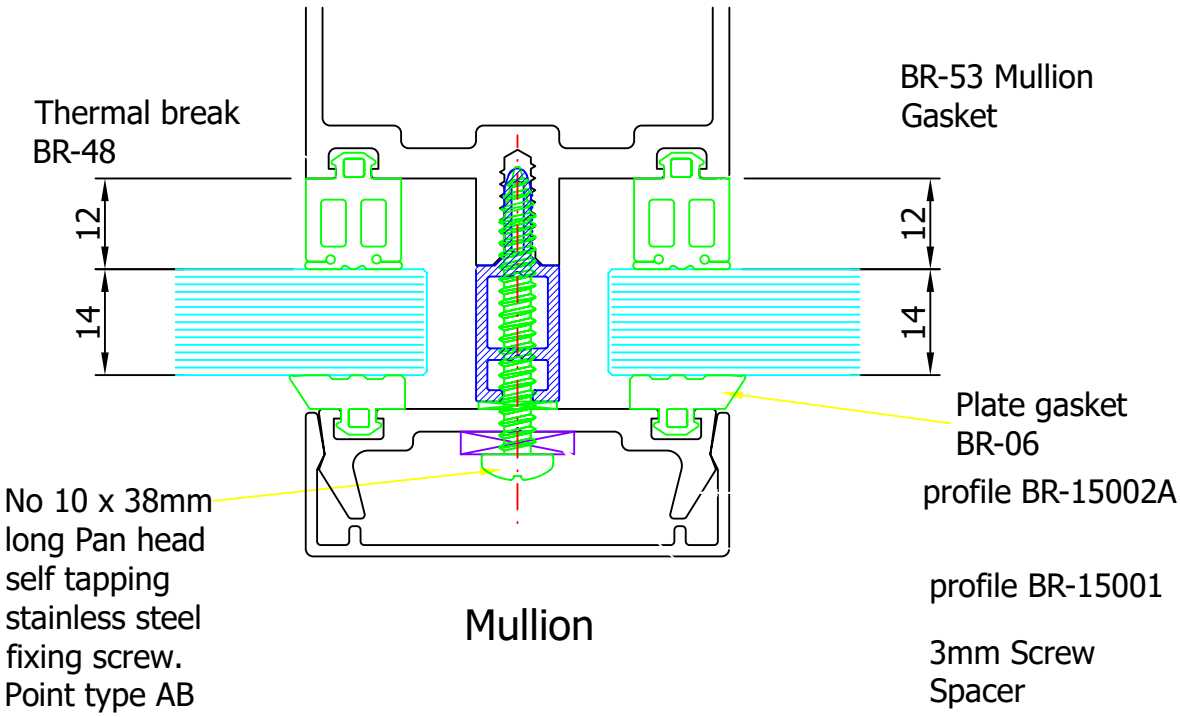


Mullion

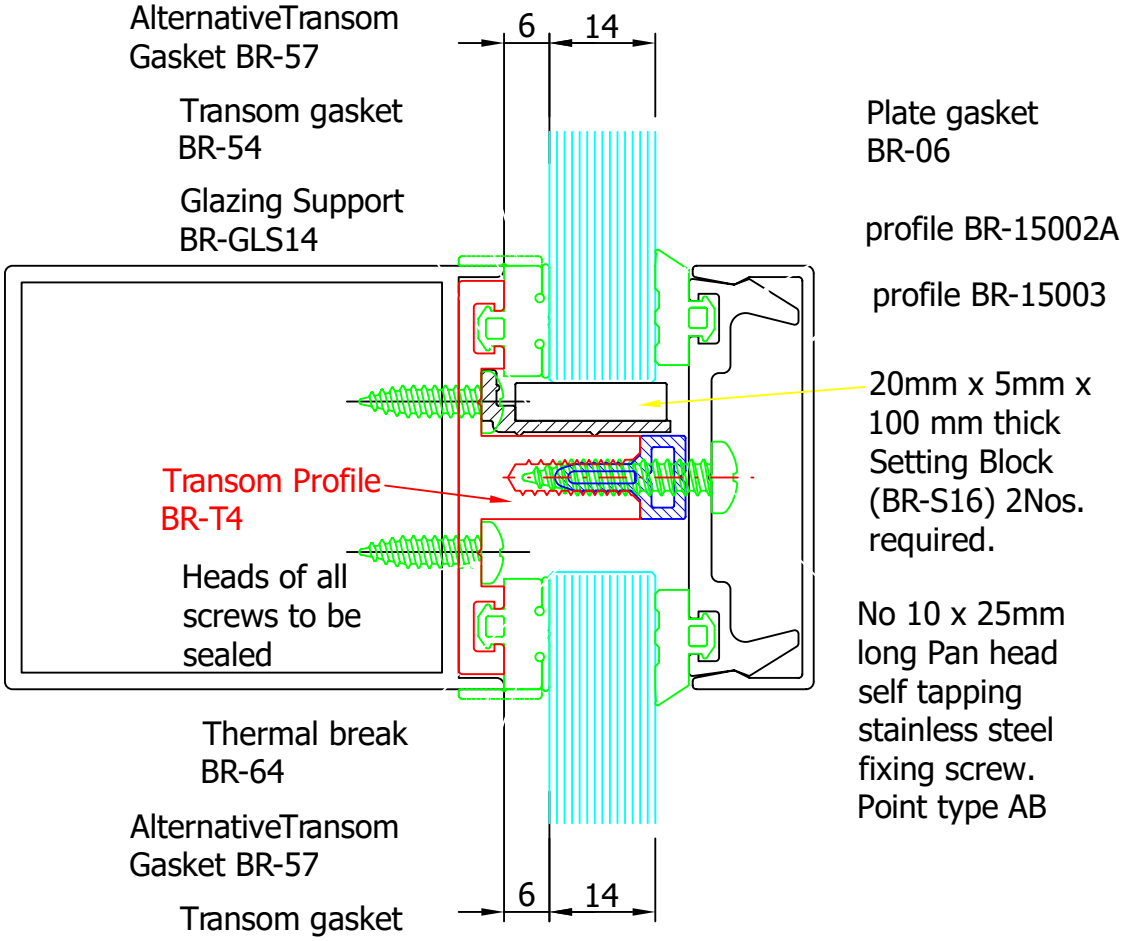


Transom

## Section60 - Glazing Options - Capped

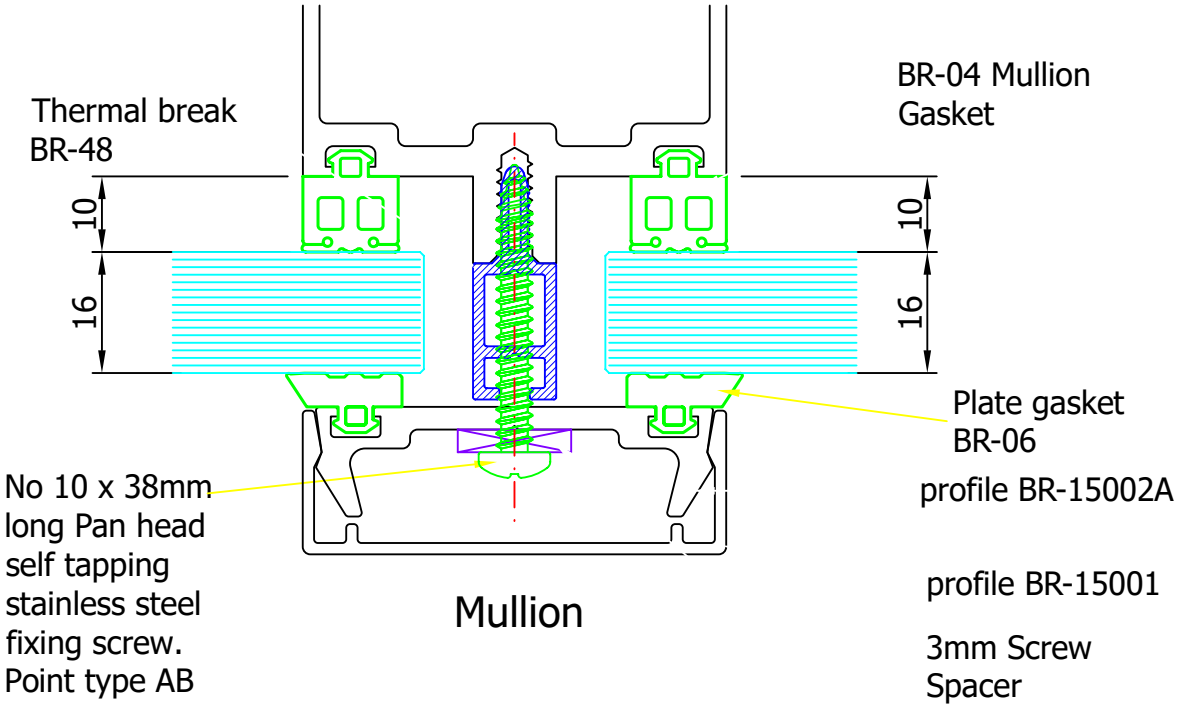


Mullion

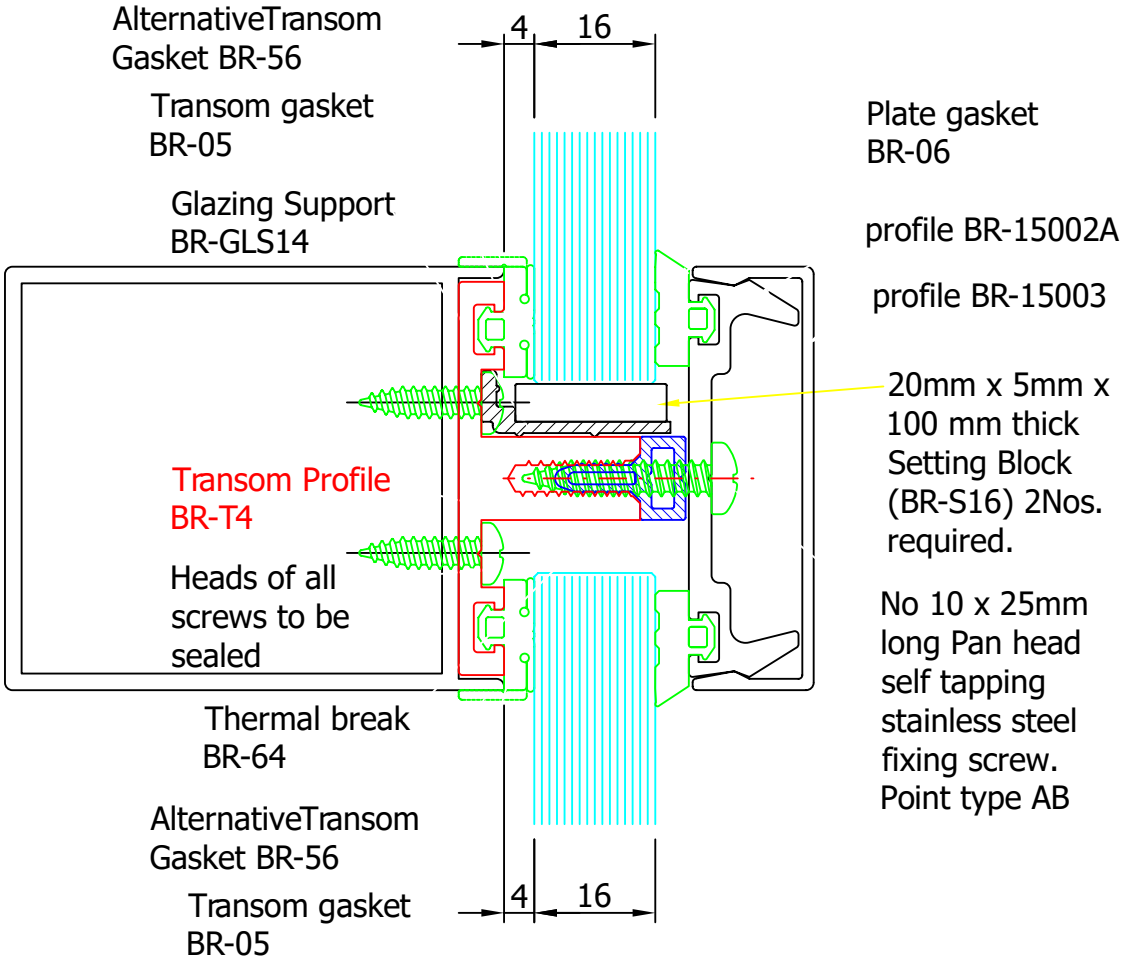


Transom

## Section60 - Glazing Options - Capped

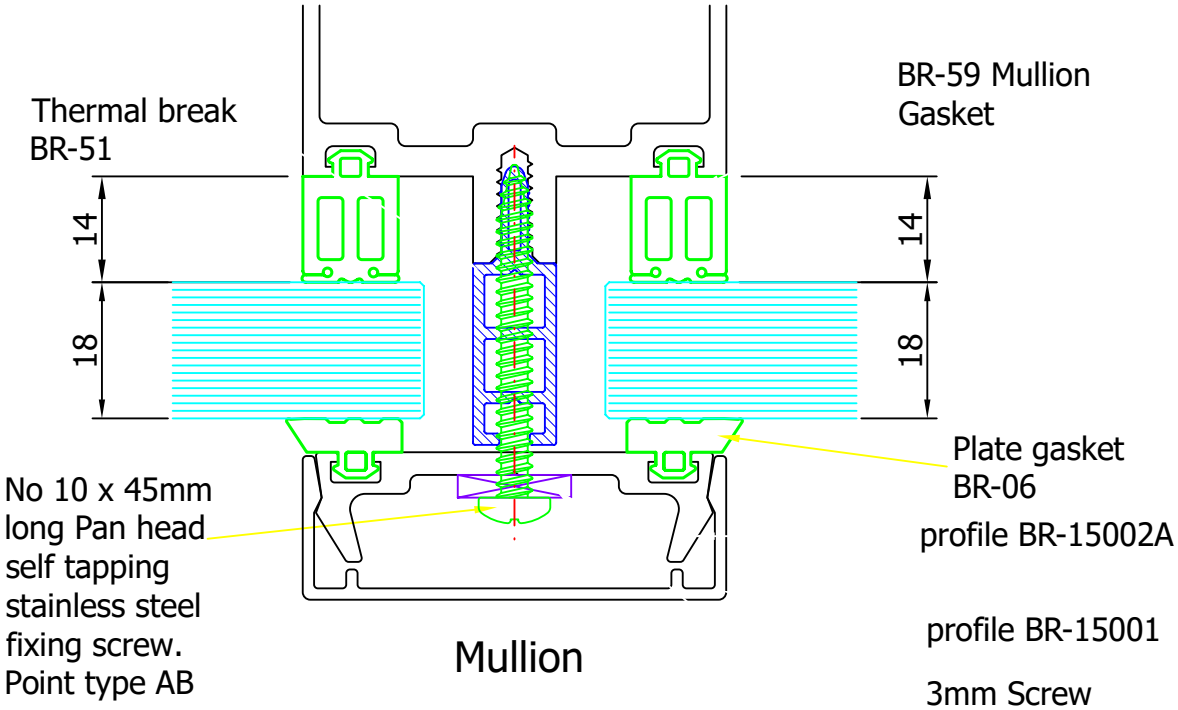


Mullion

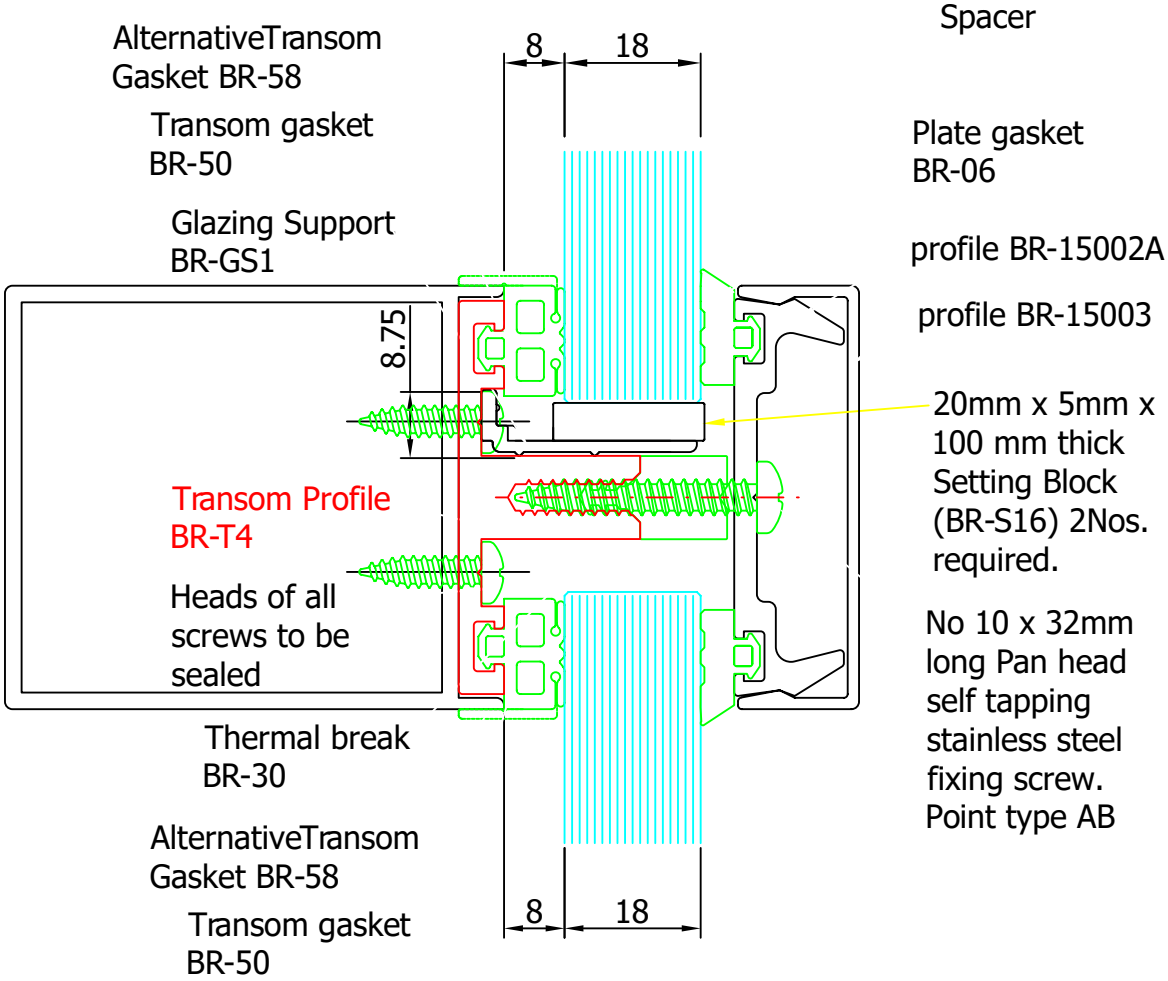


Transom

## Section60 - Glazing Options - Capped

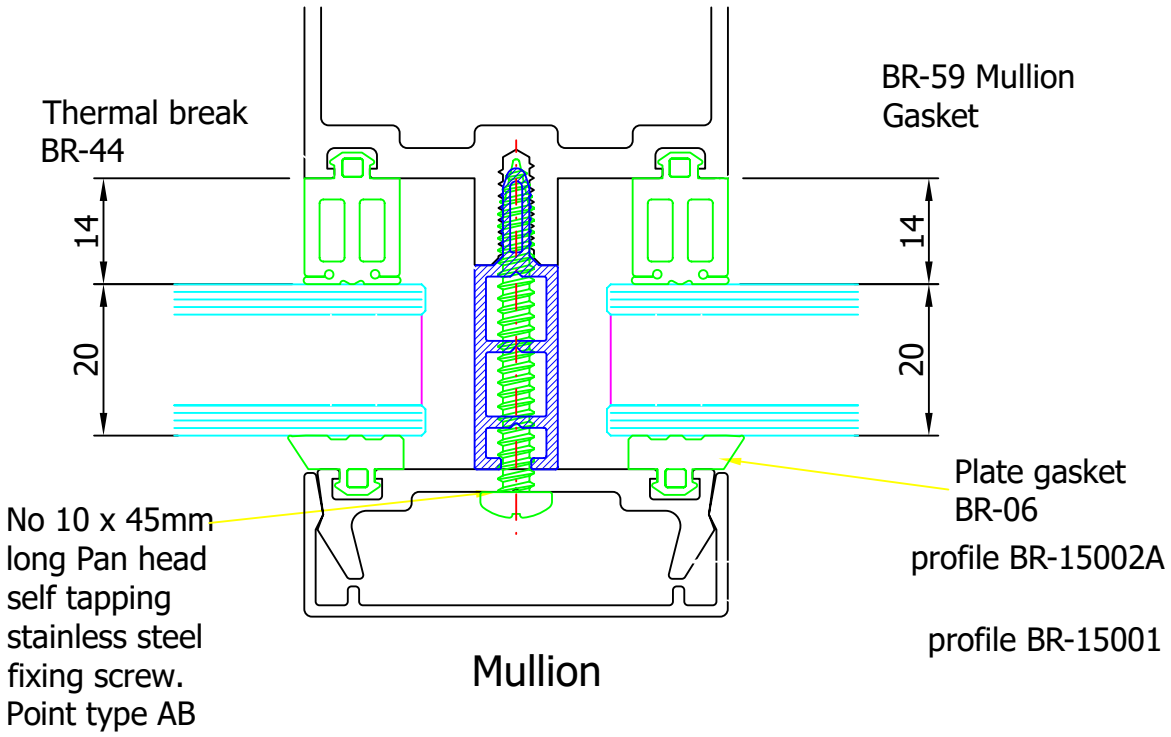


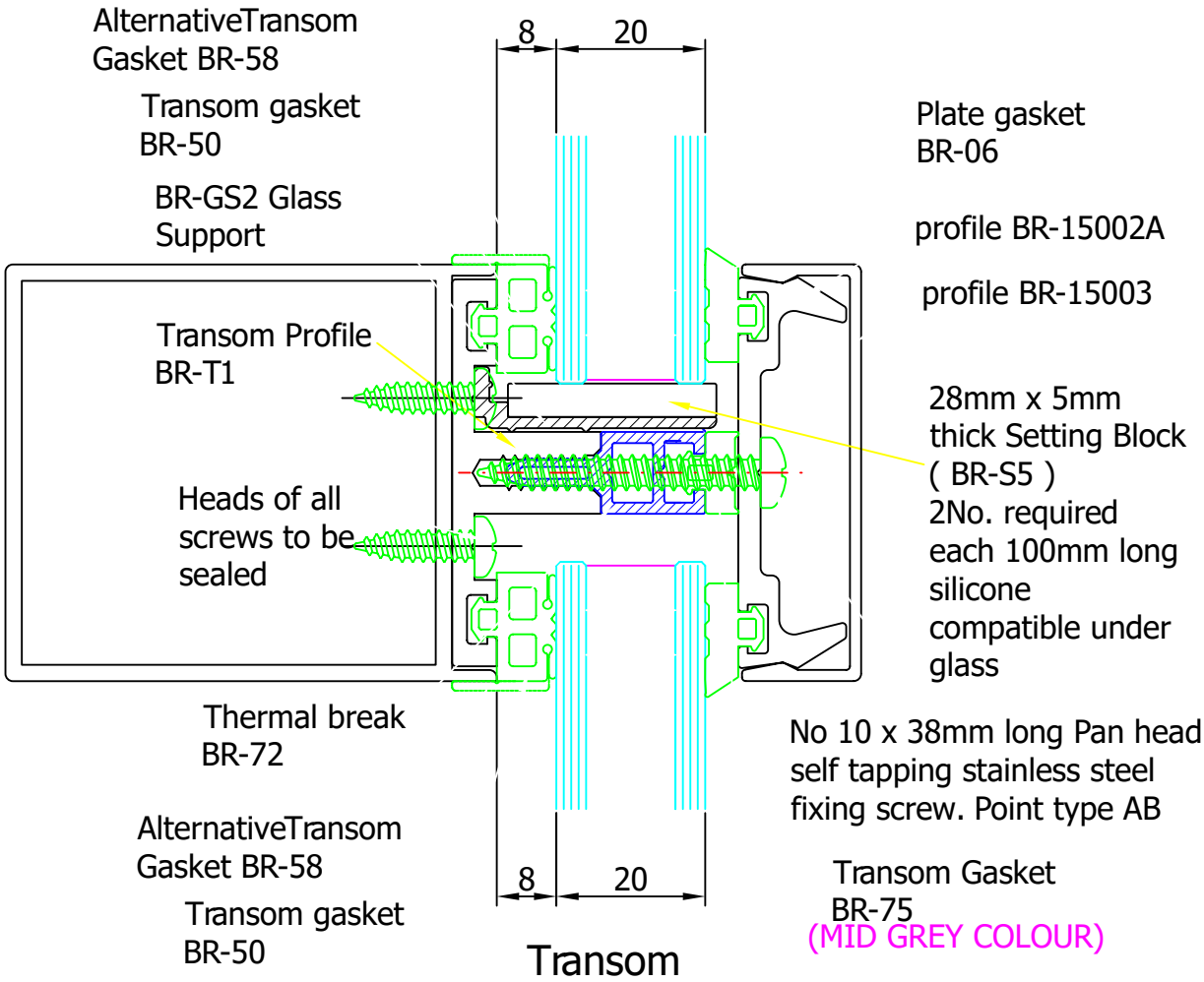

## Section60 - Glazing Options - Capped

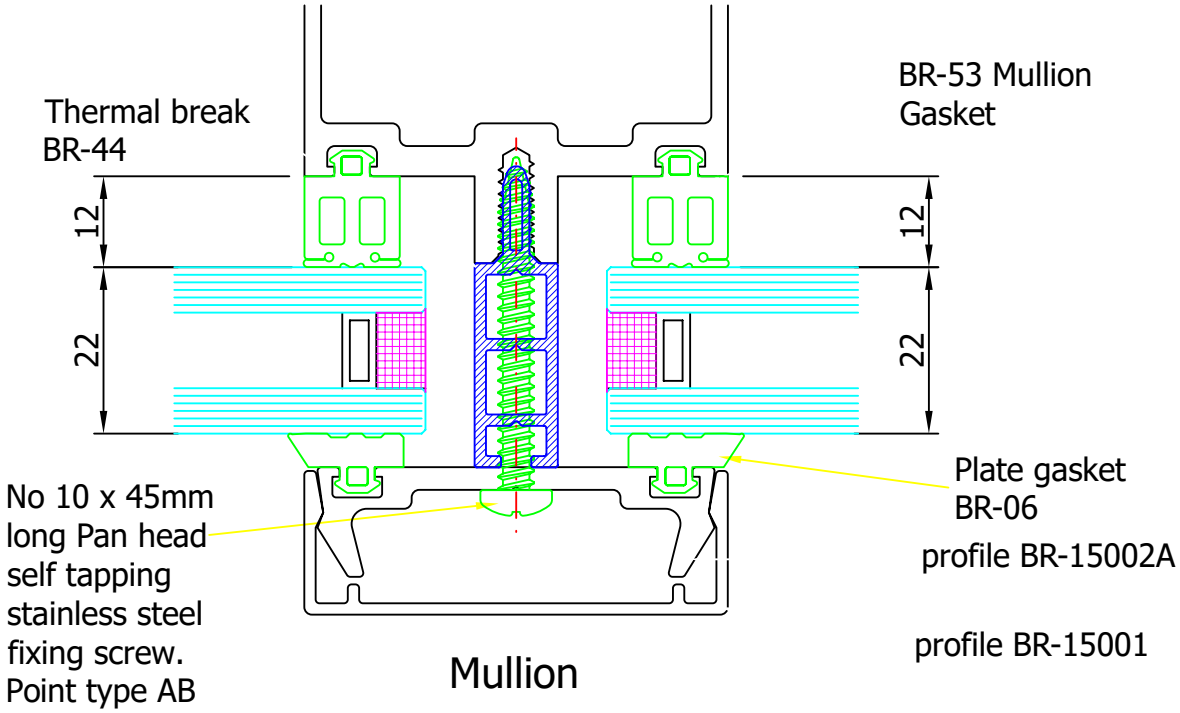


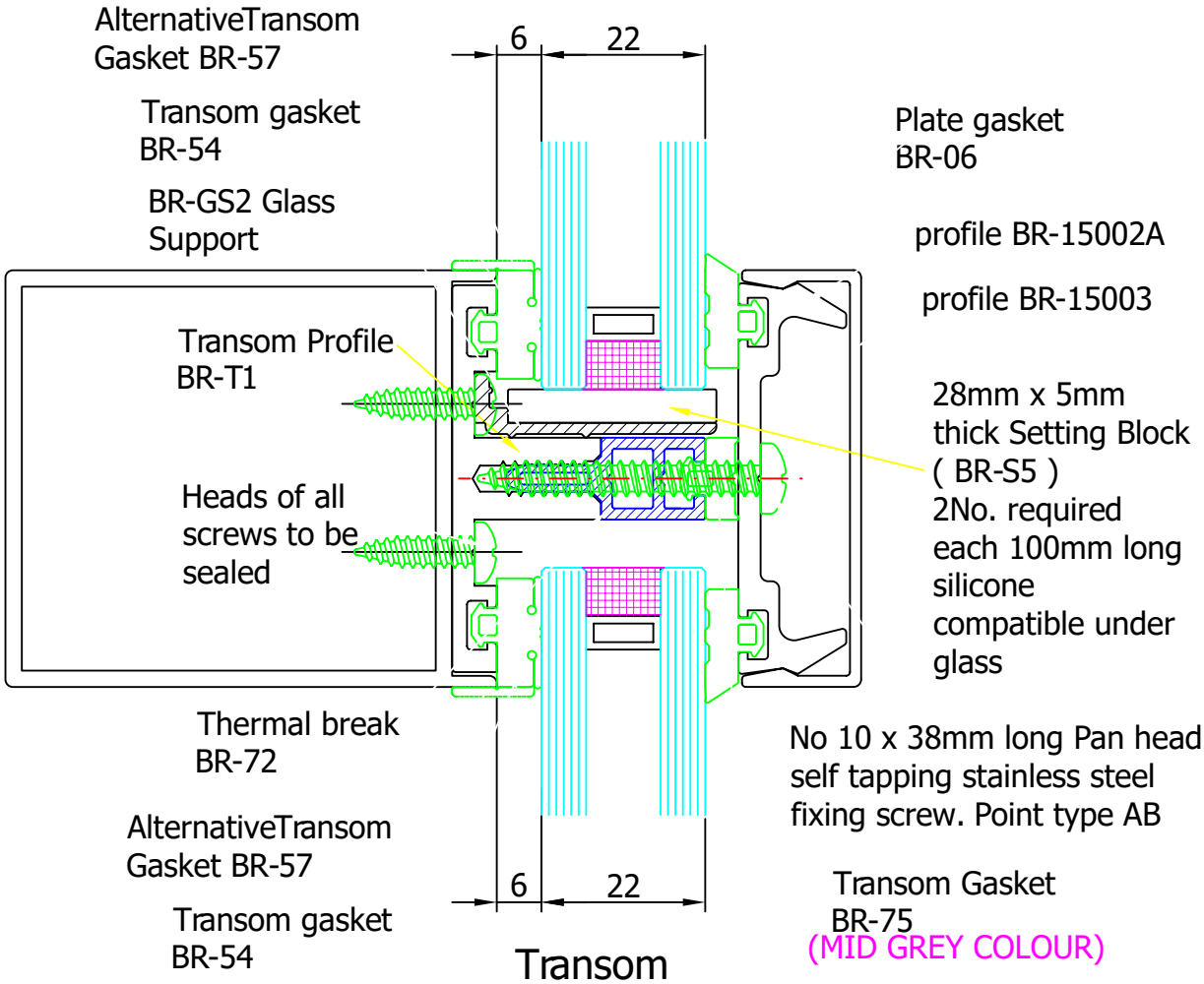

## Section60 - Glazing Options - Capped

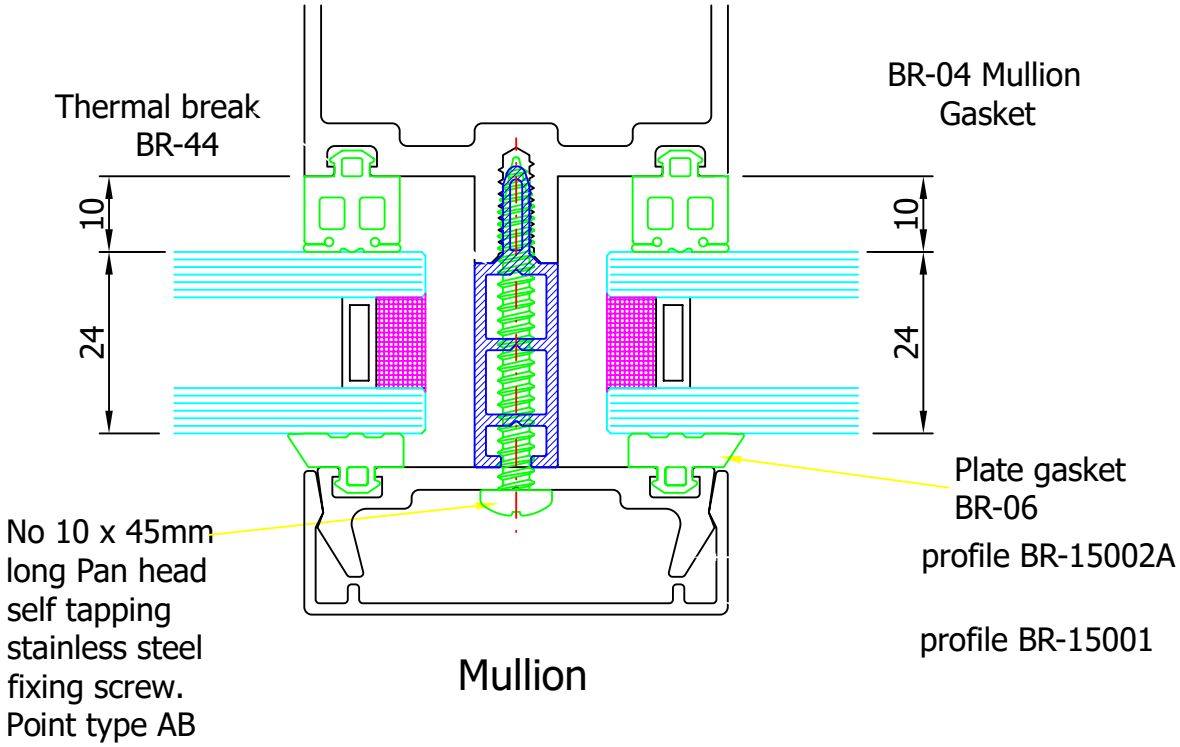


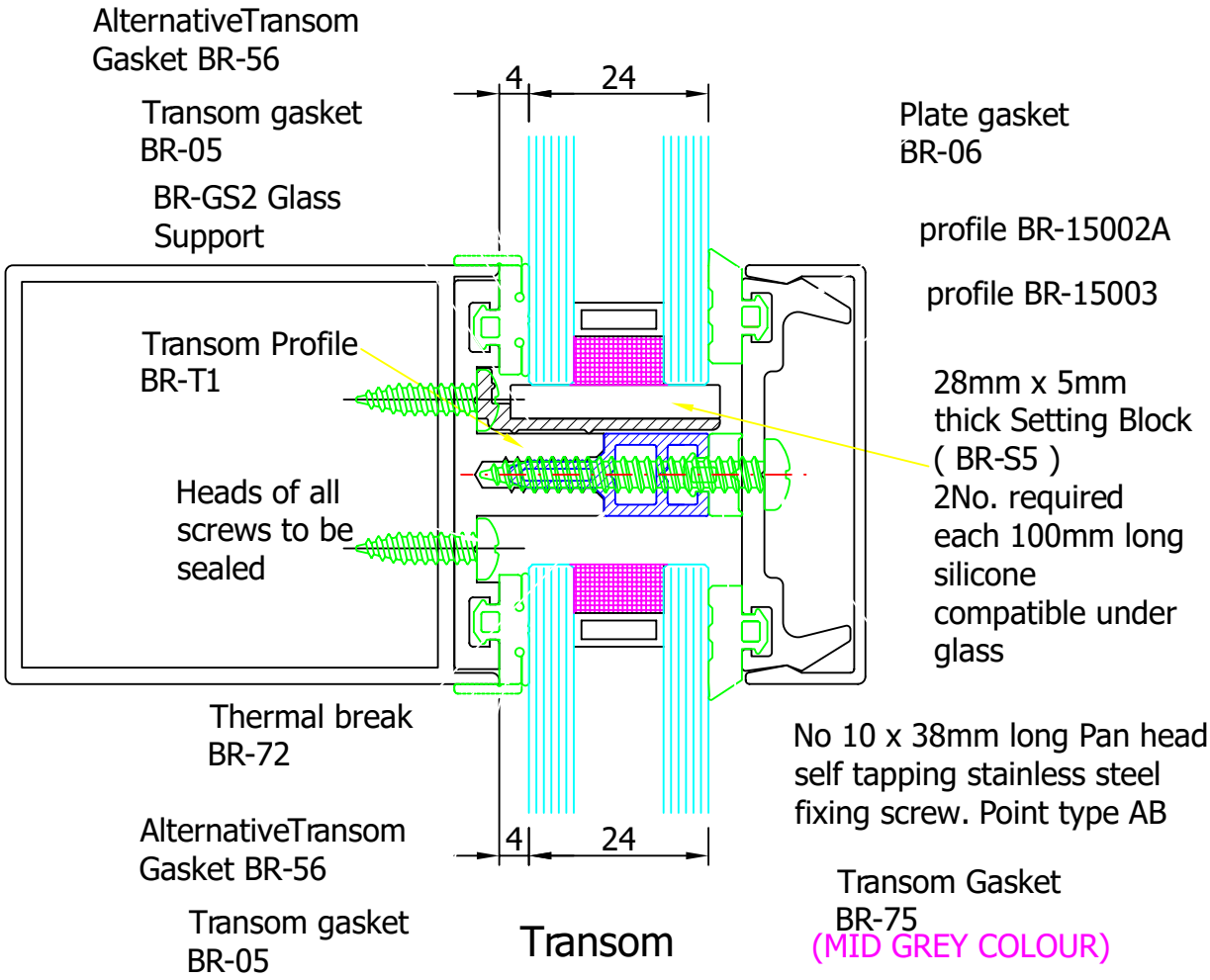

## Section60 - Glazing Options - Capped

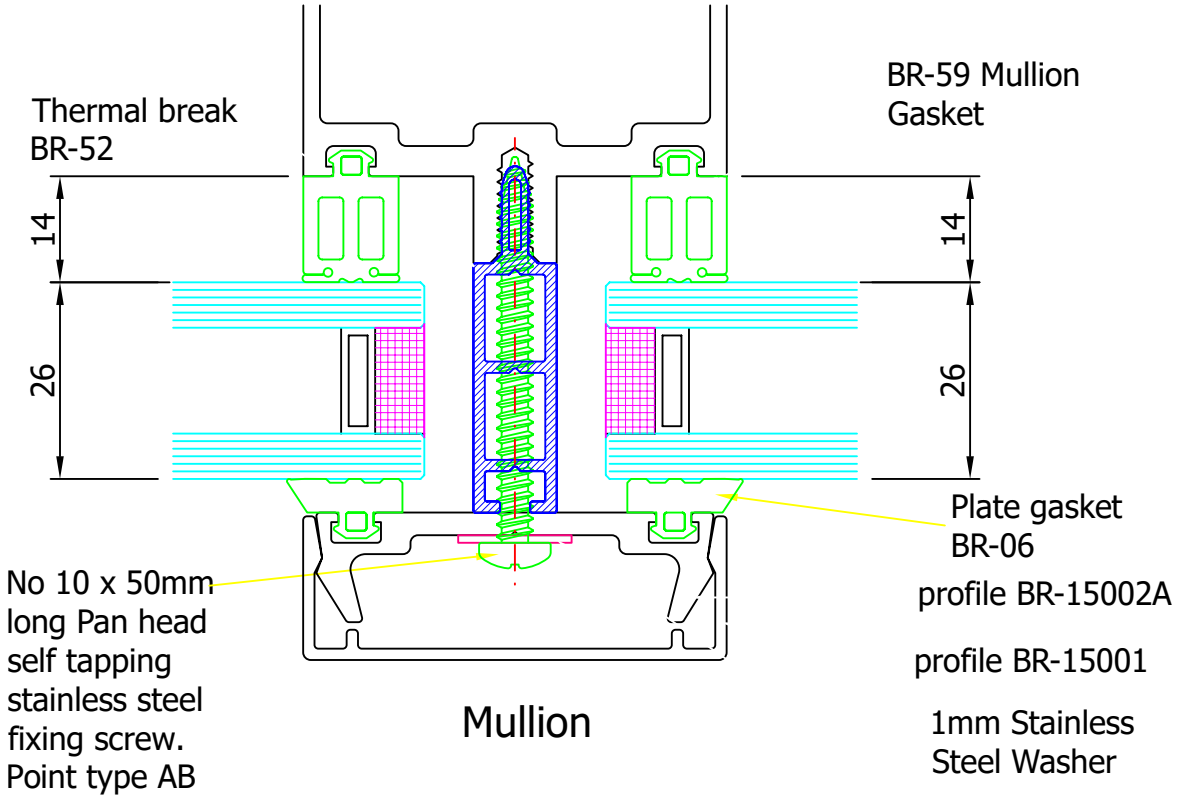


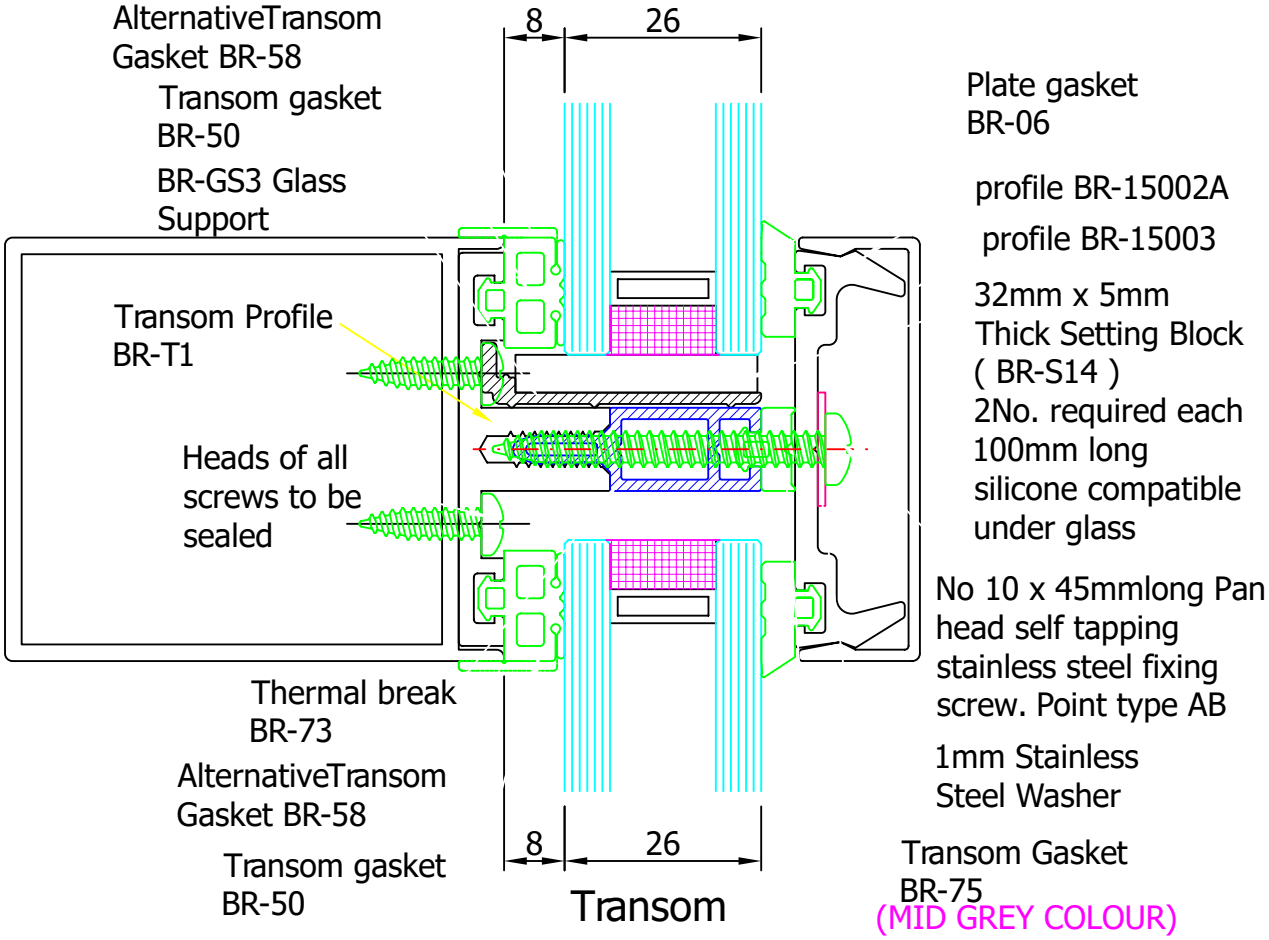

## Section60 - Glazing Options - Capped

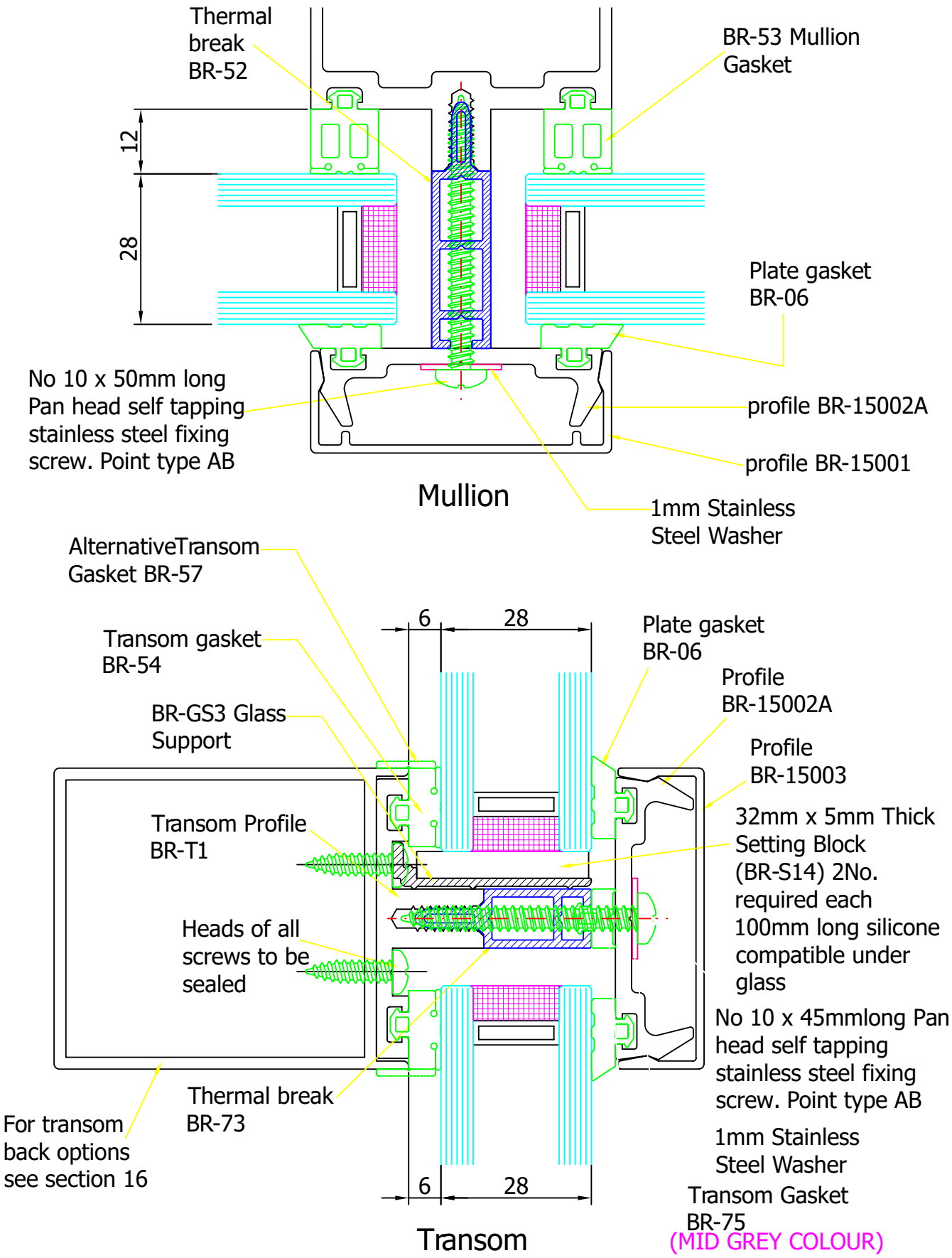

## Section60 - Glazing Options - Capped

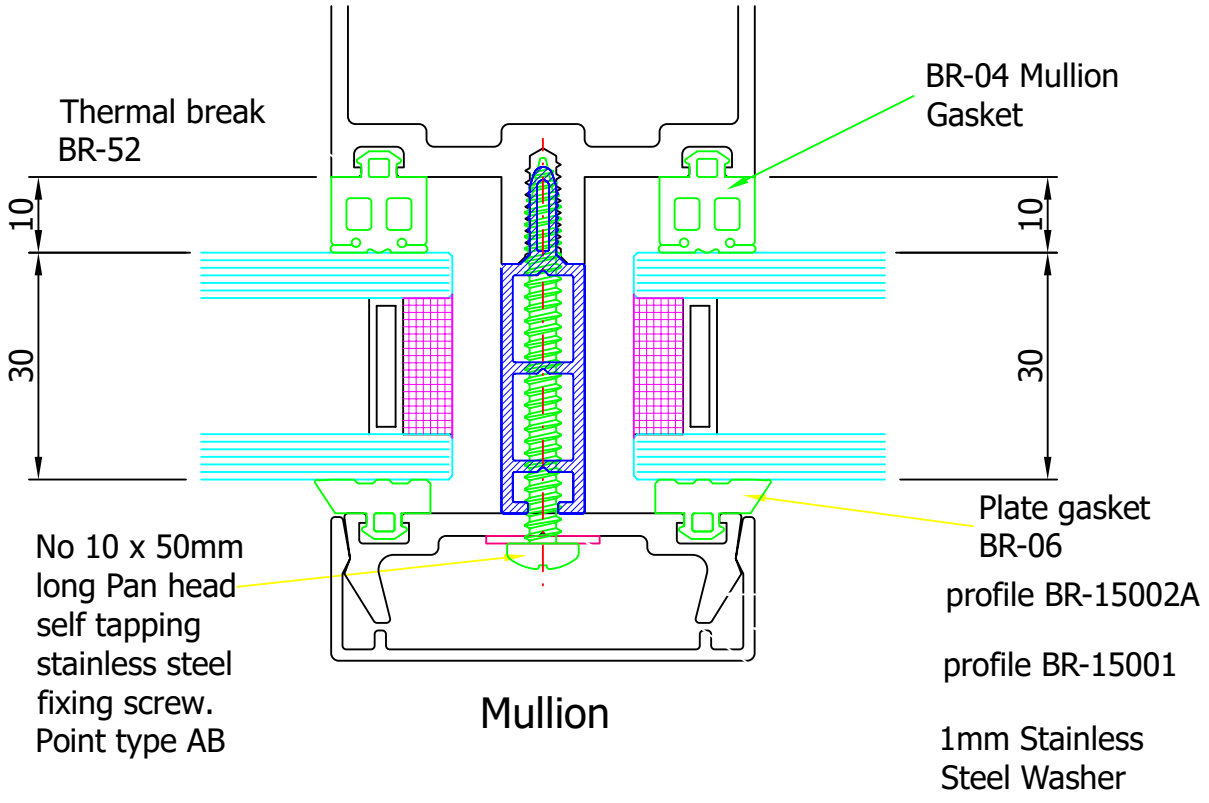


Mullion

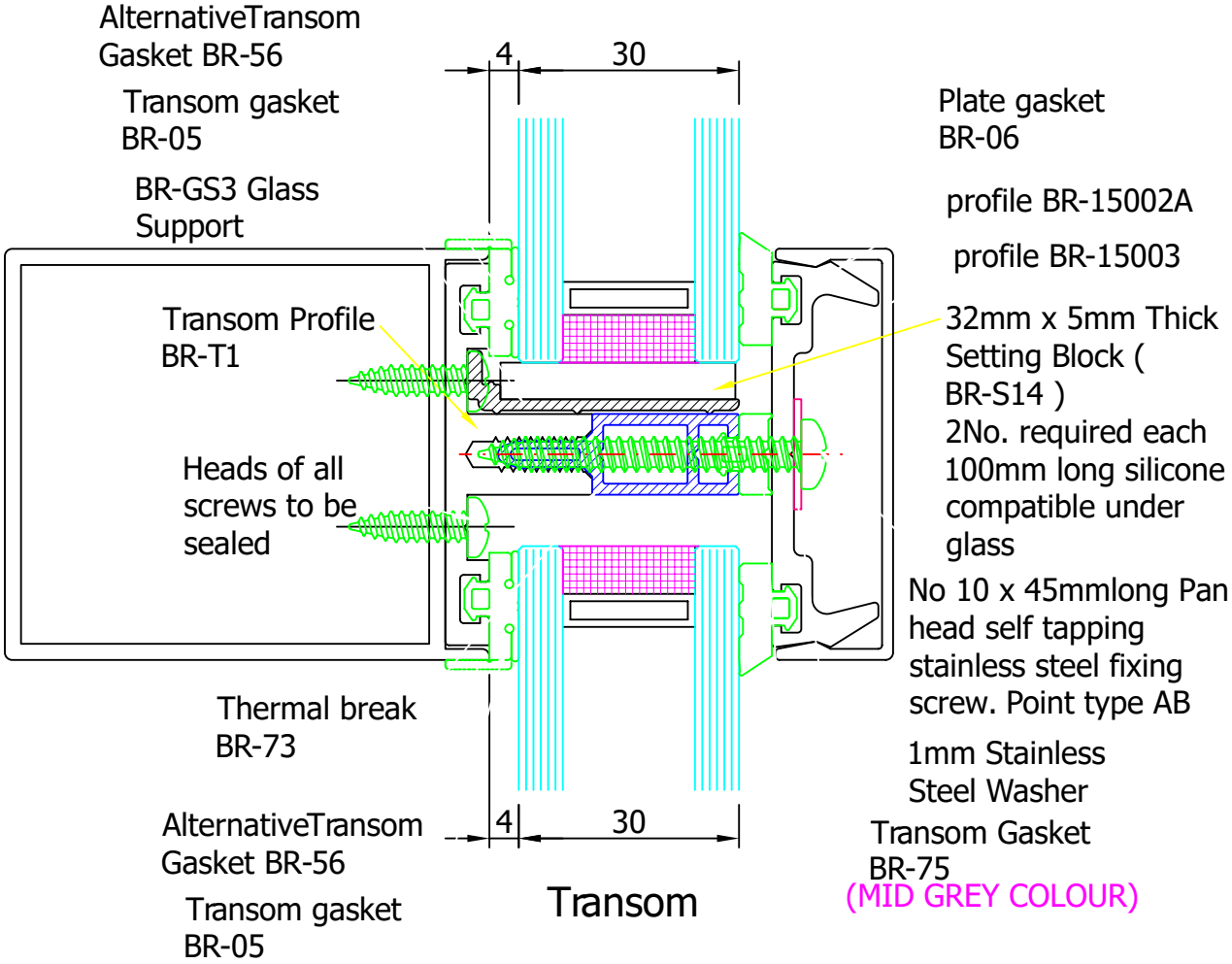


Transom

## Section60 - Glazing Options - Capped

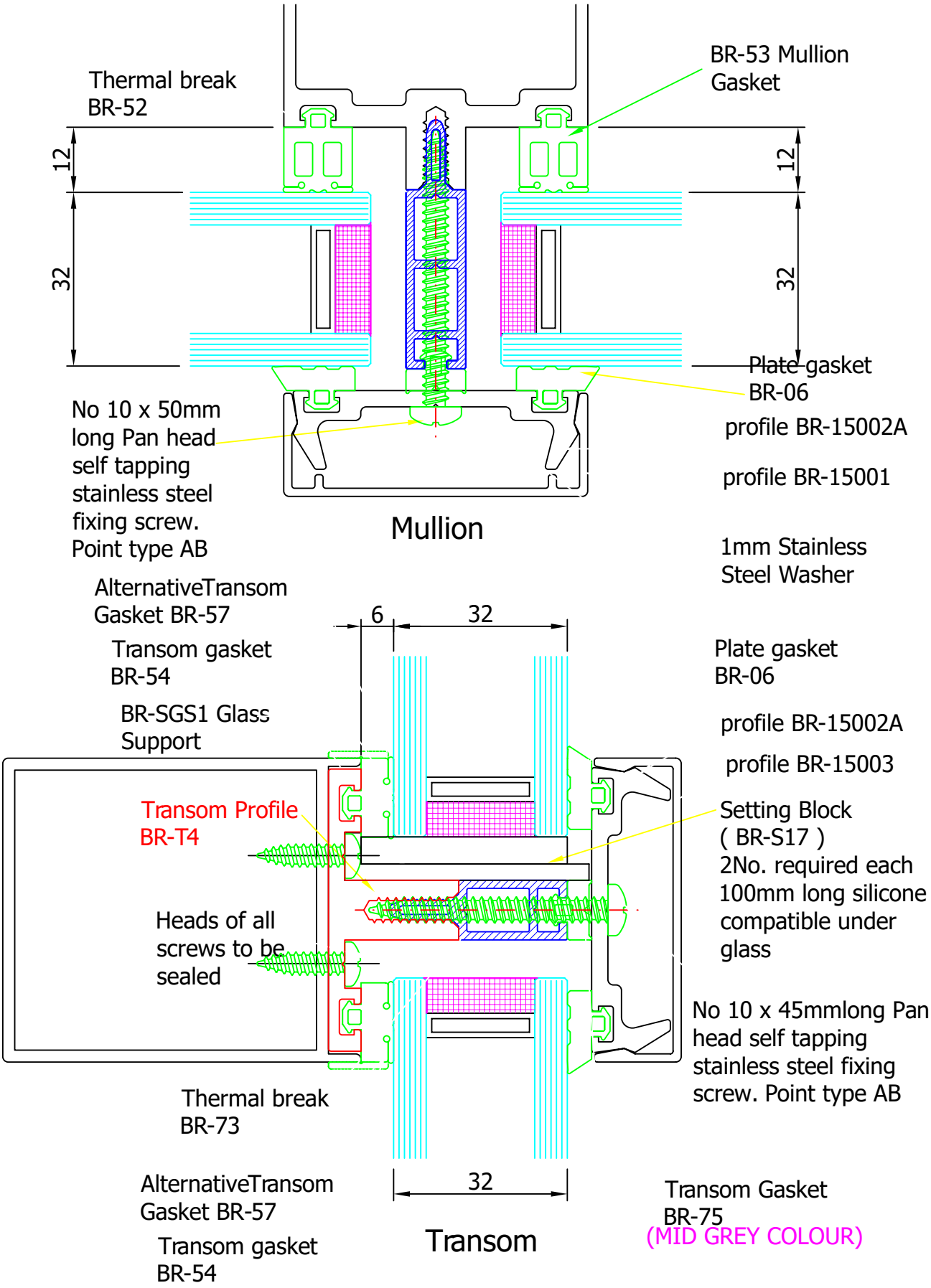

## Section60 - Glazing Options - Capped

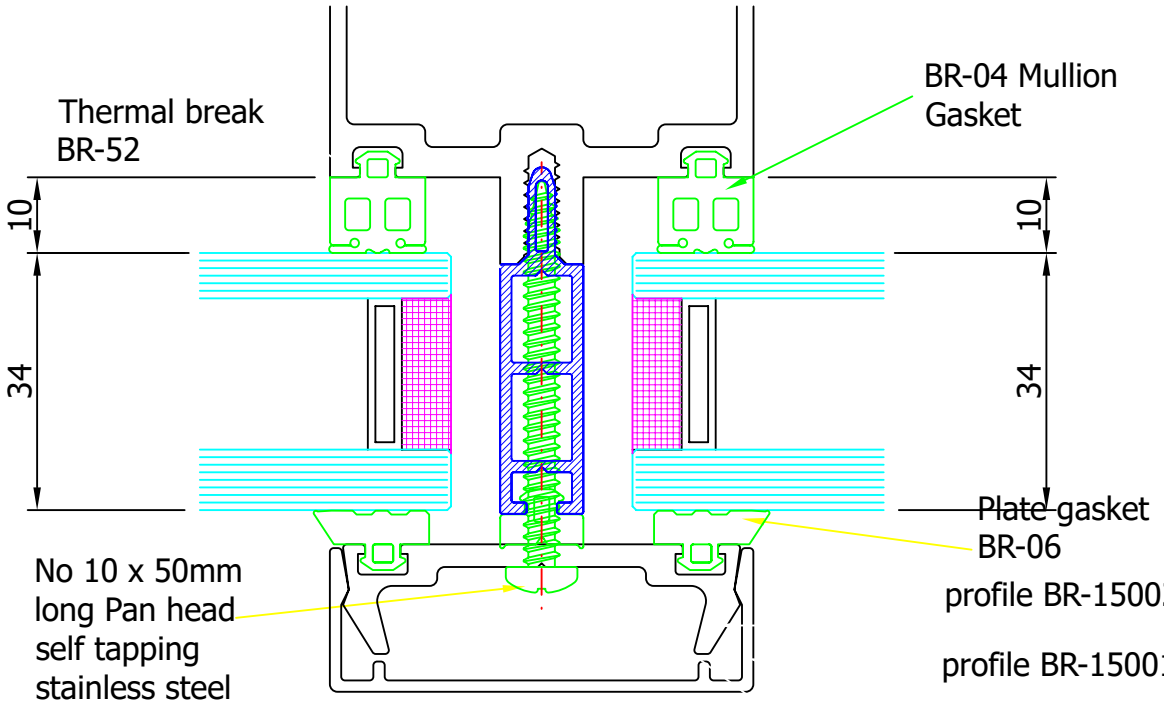


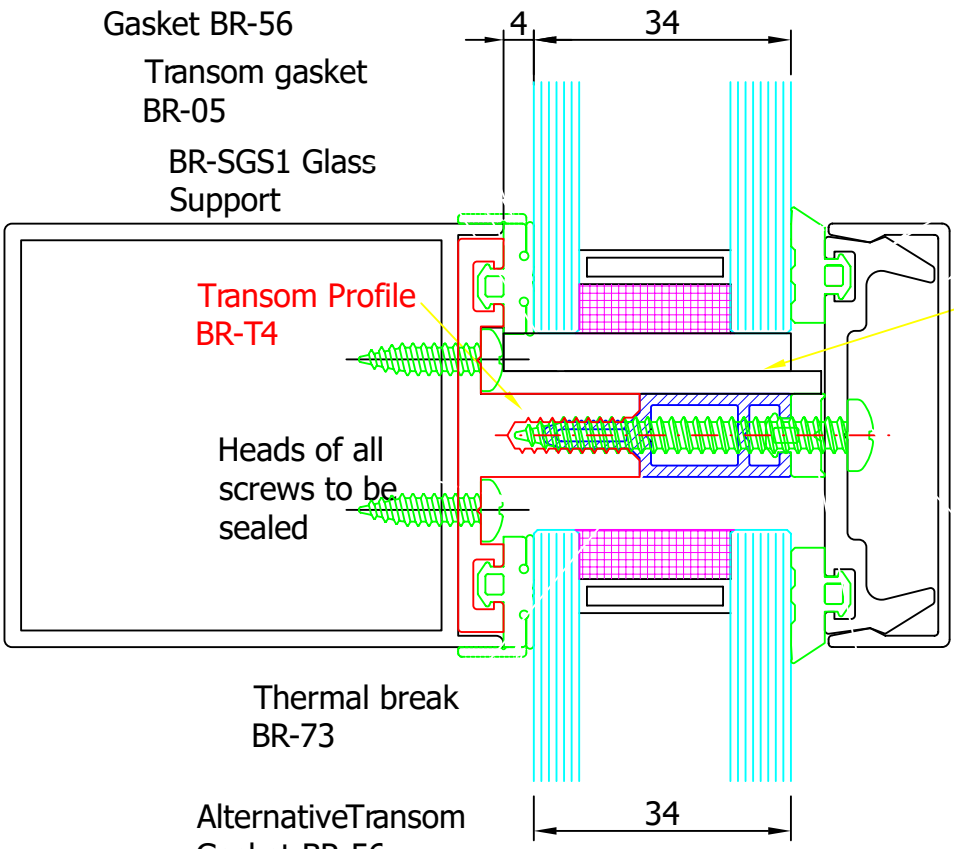

## Section60 - Glazing Options - Capped

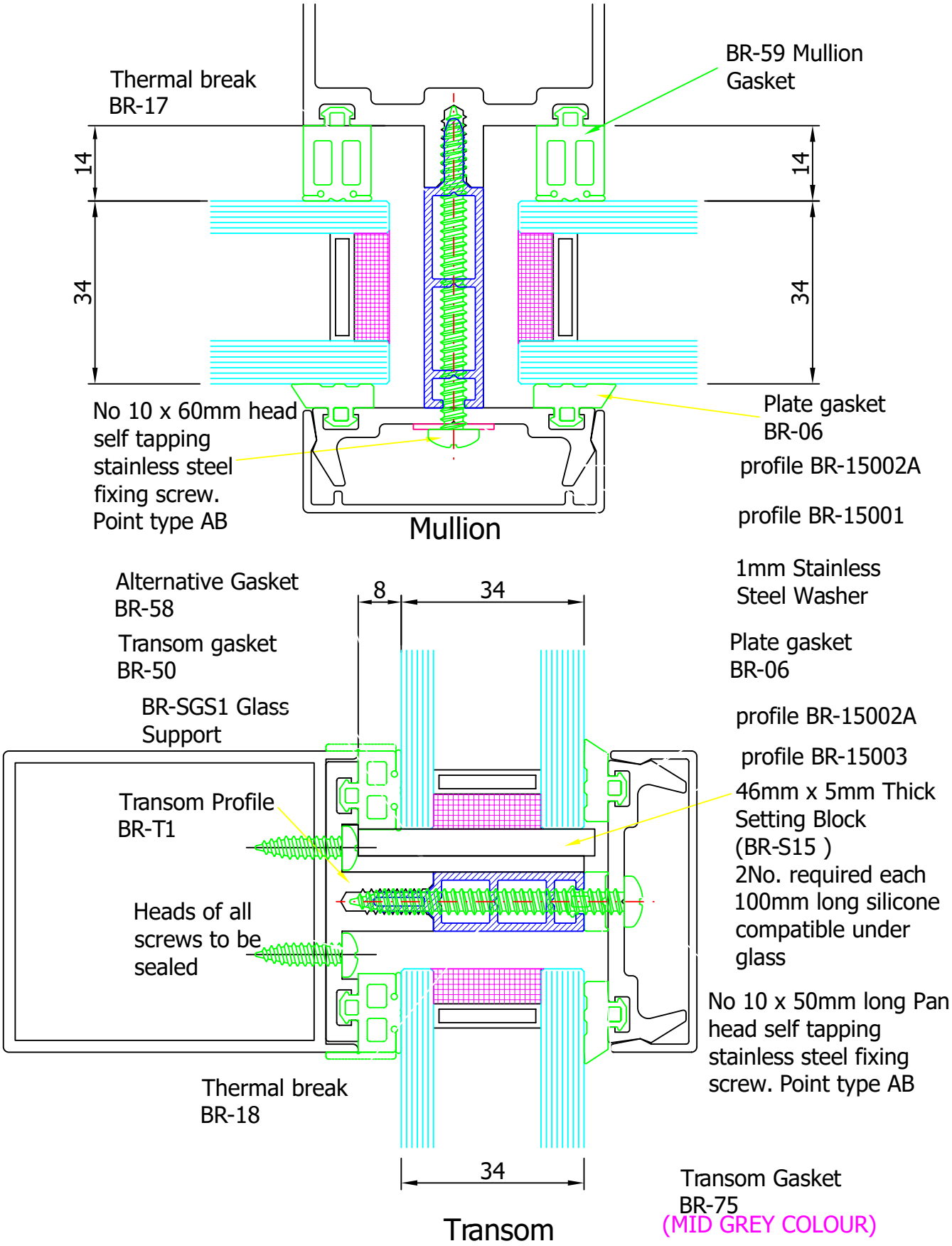

## Section60 - Glazing Options - Capped

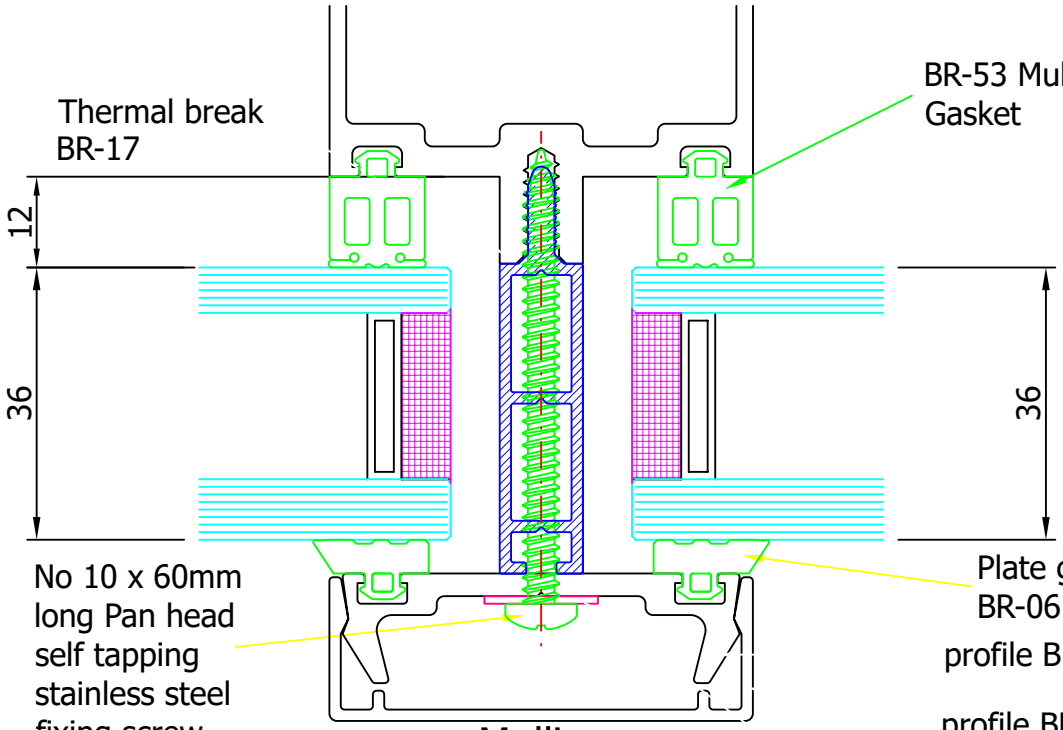


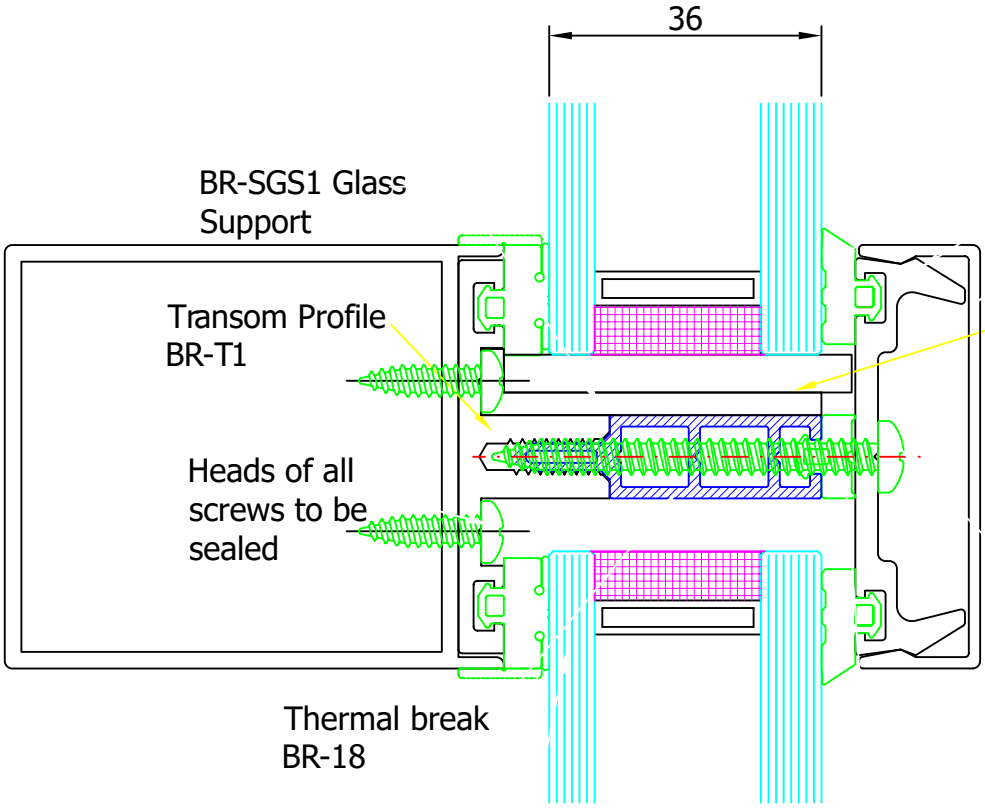

## Section60 - Glazing Options - Capped

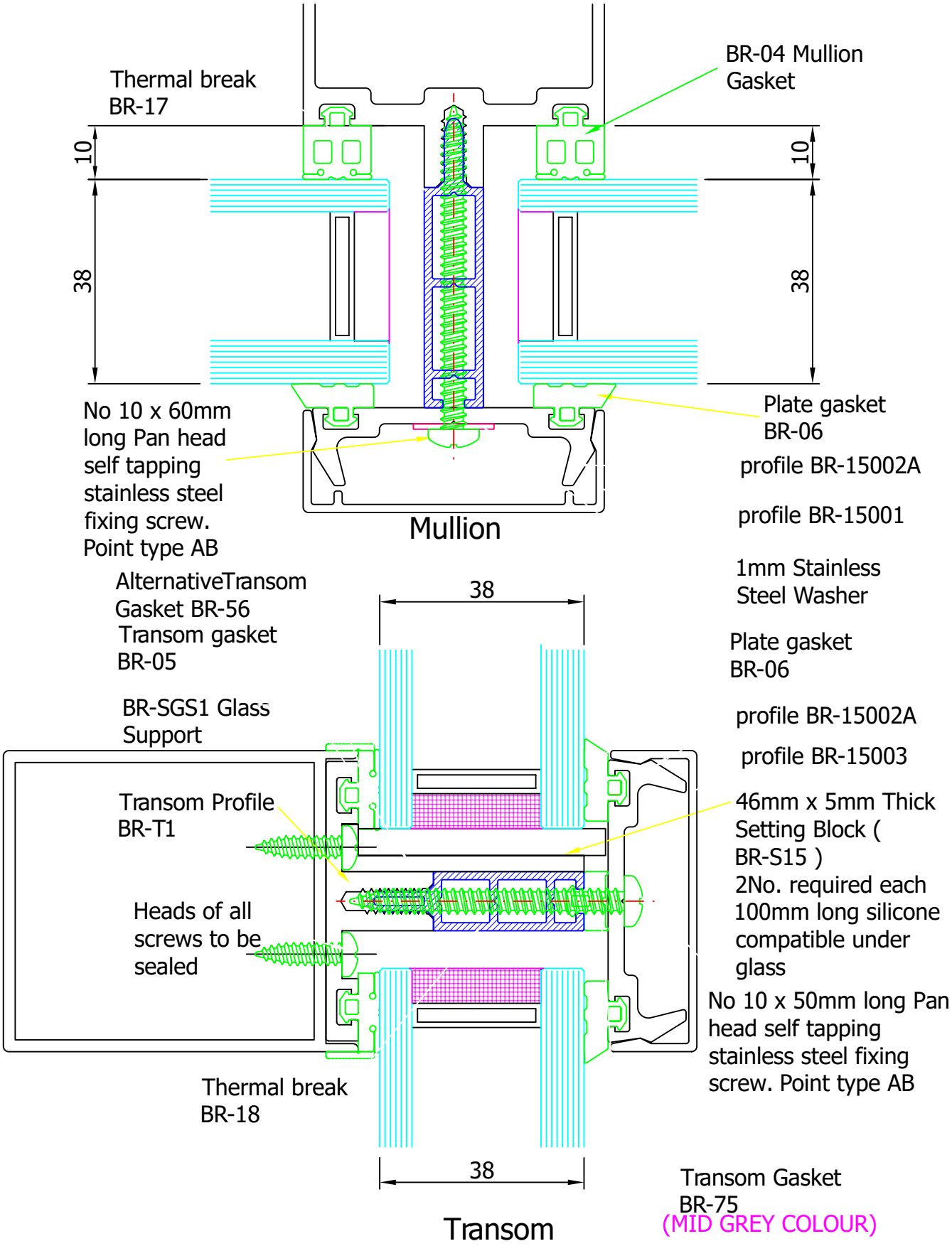

## Section60 - Glazing Options - Capped

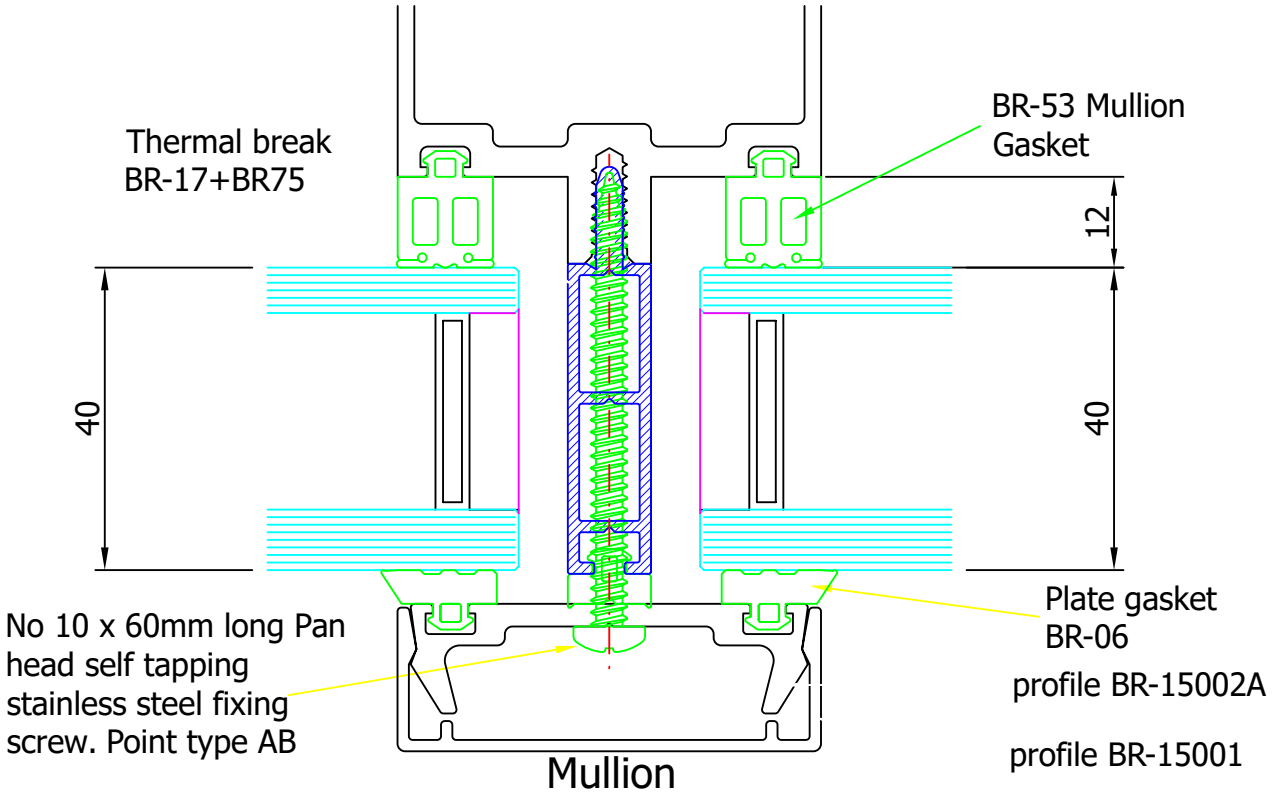


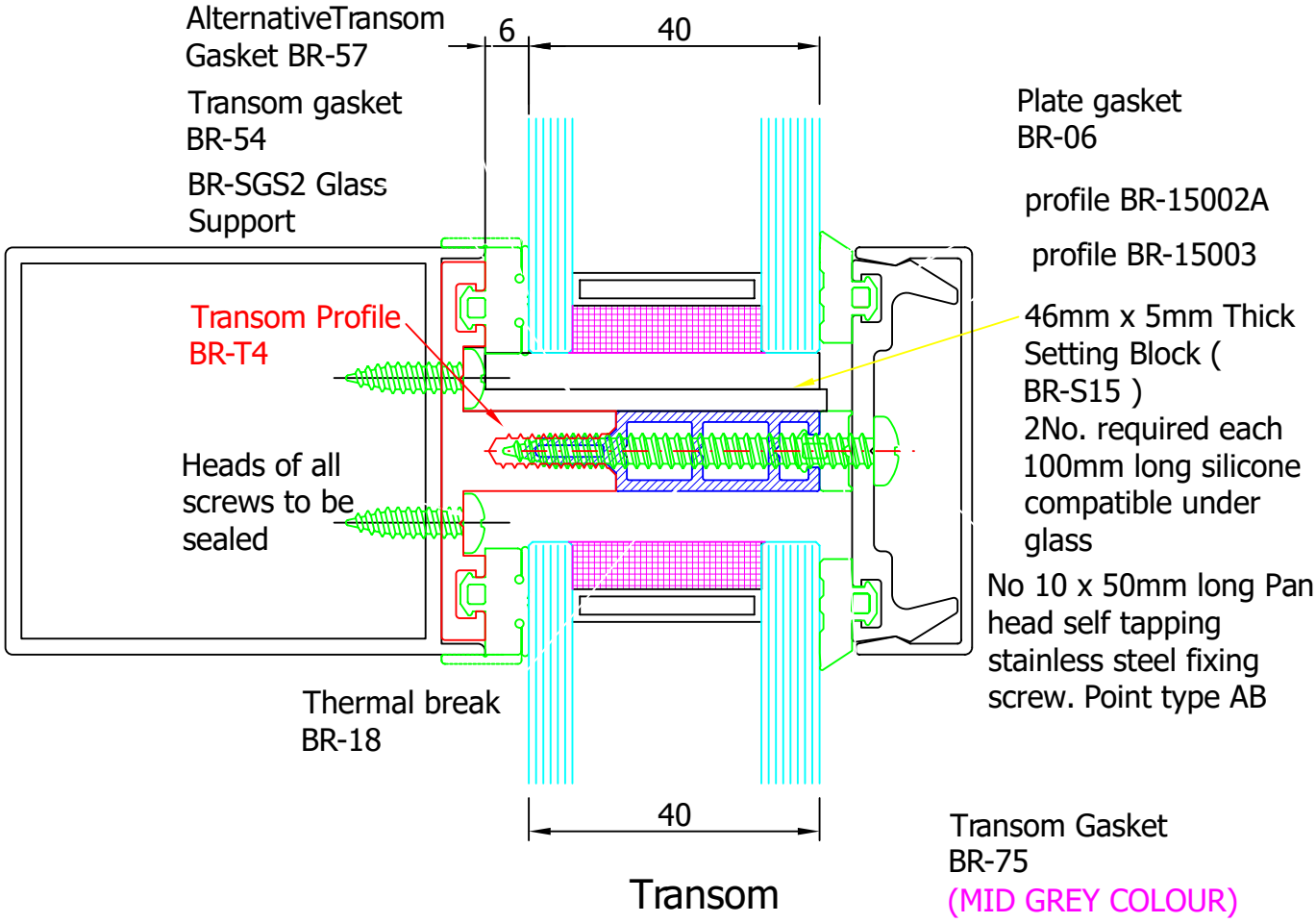

## Section60 - Glazing Options - Capped

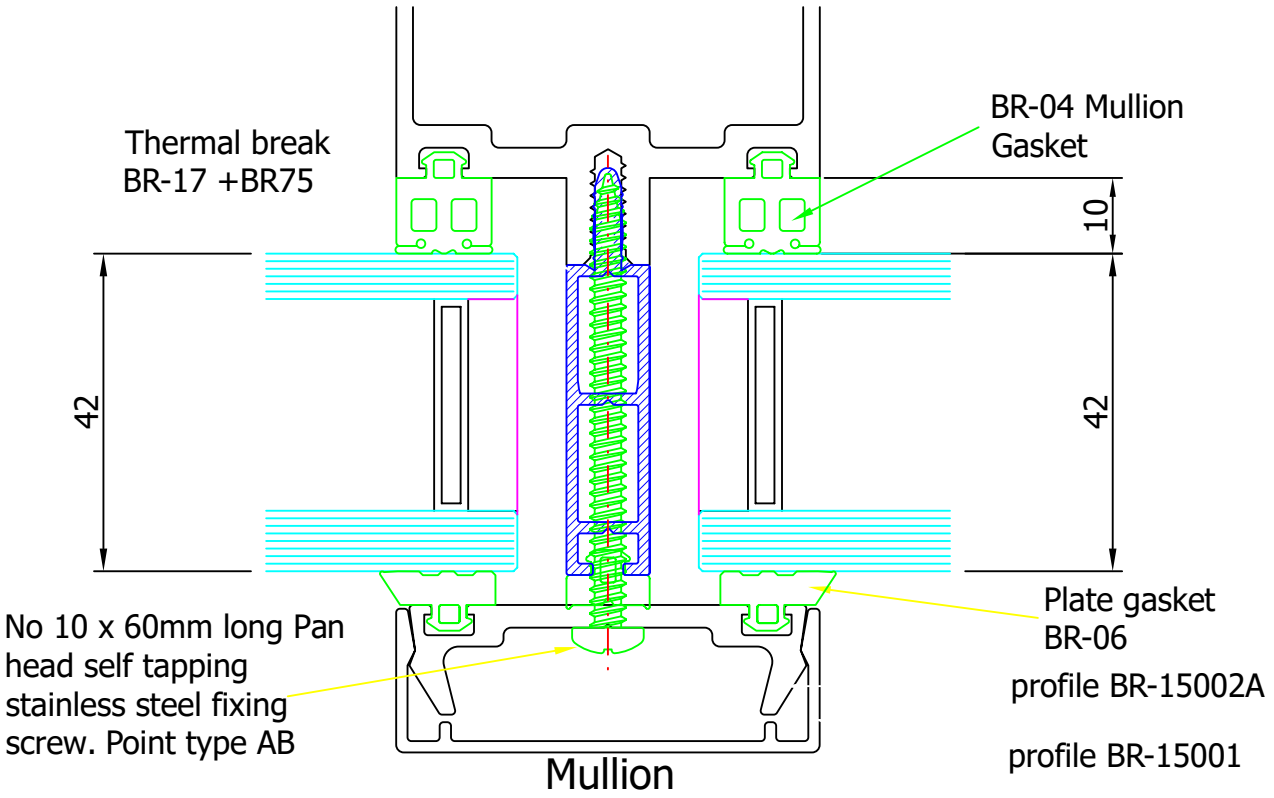


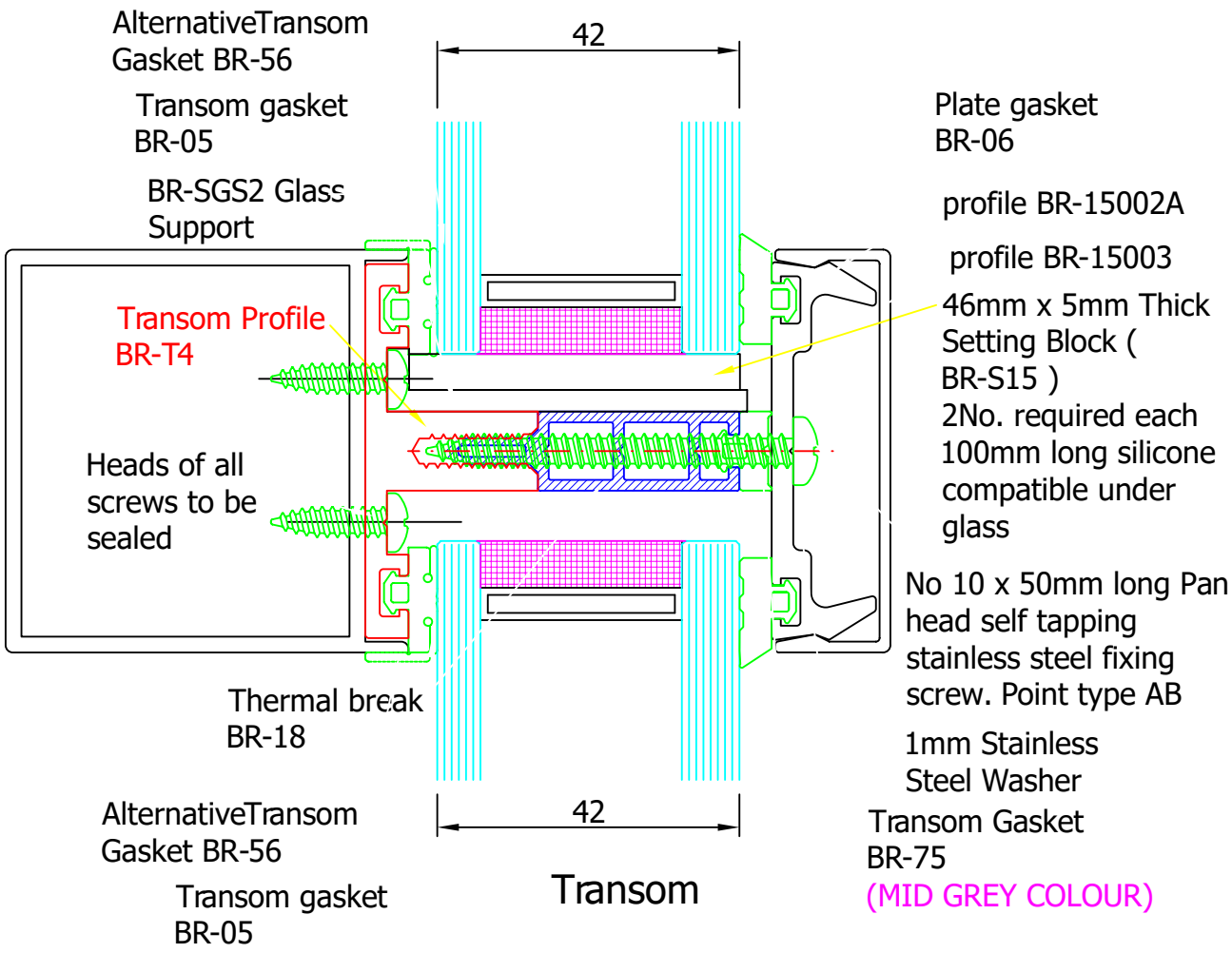

## Section60 - Glazing Options - Capped

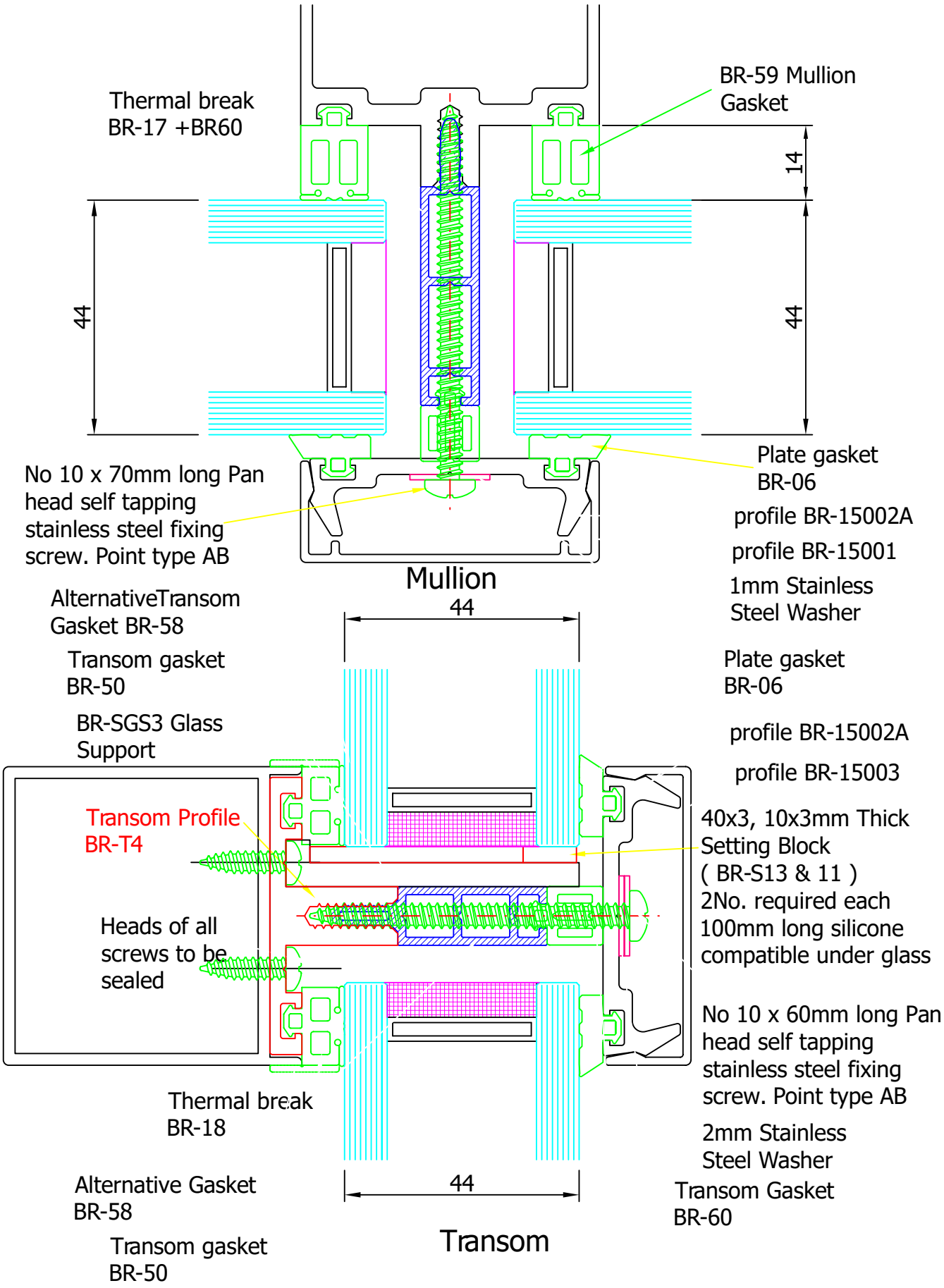

## Section60 - Glazing Options - Capped

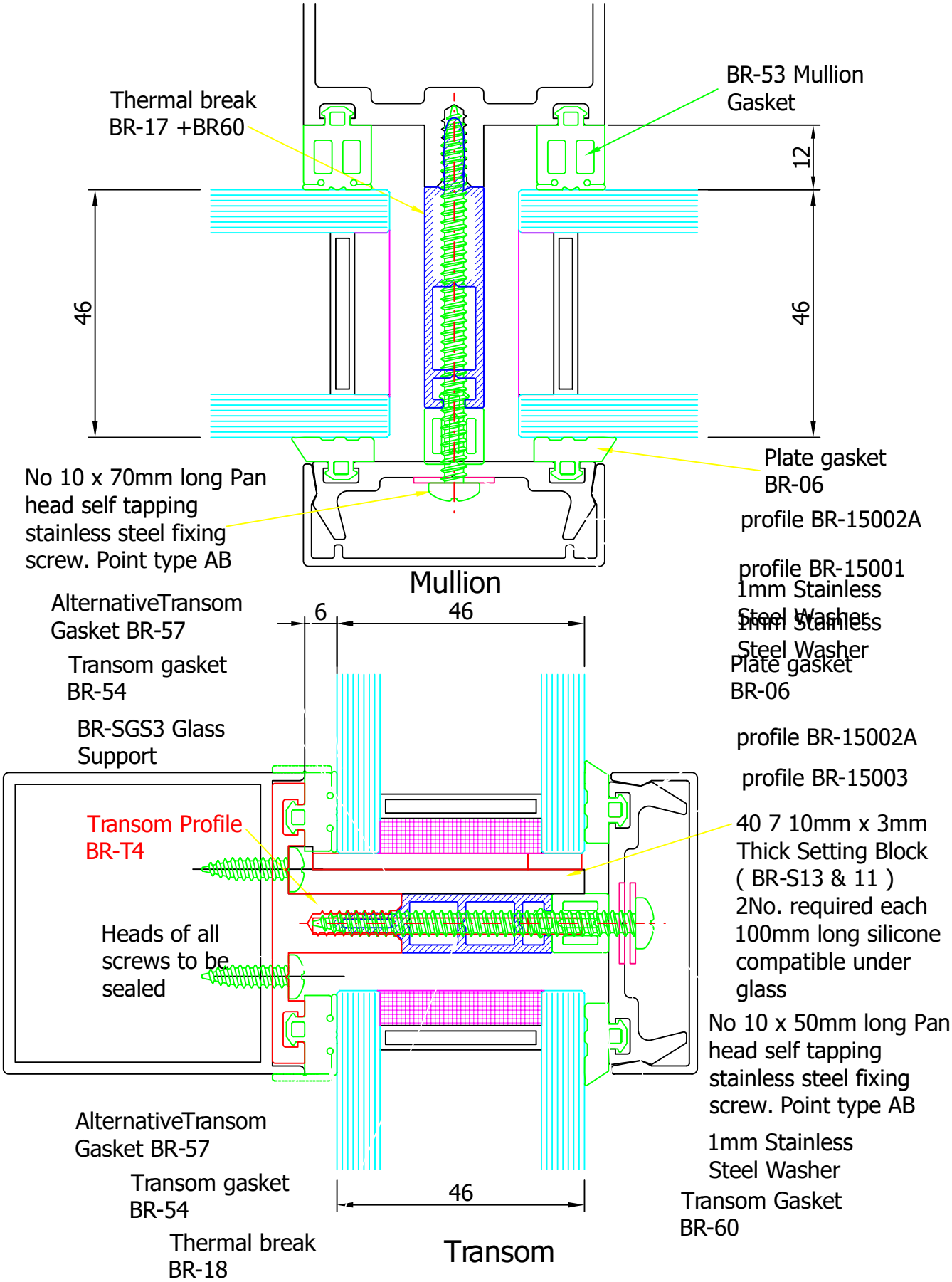

## Section60 - Glazing Options - Capped

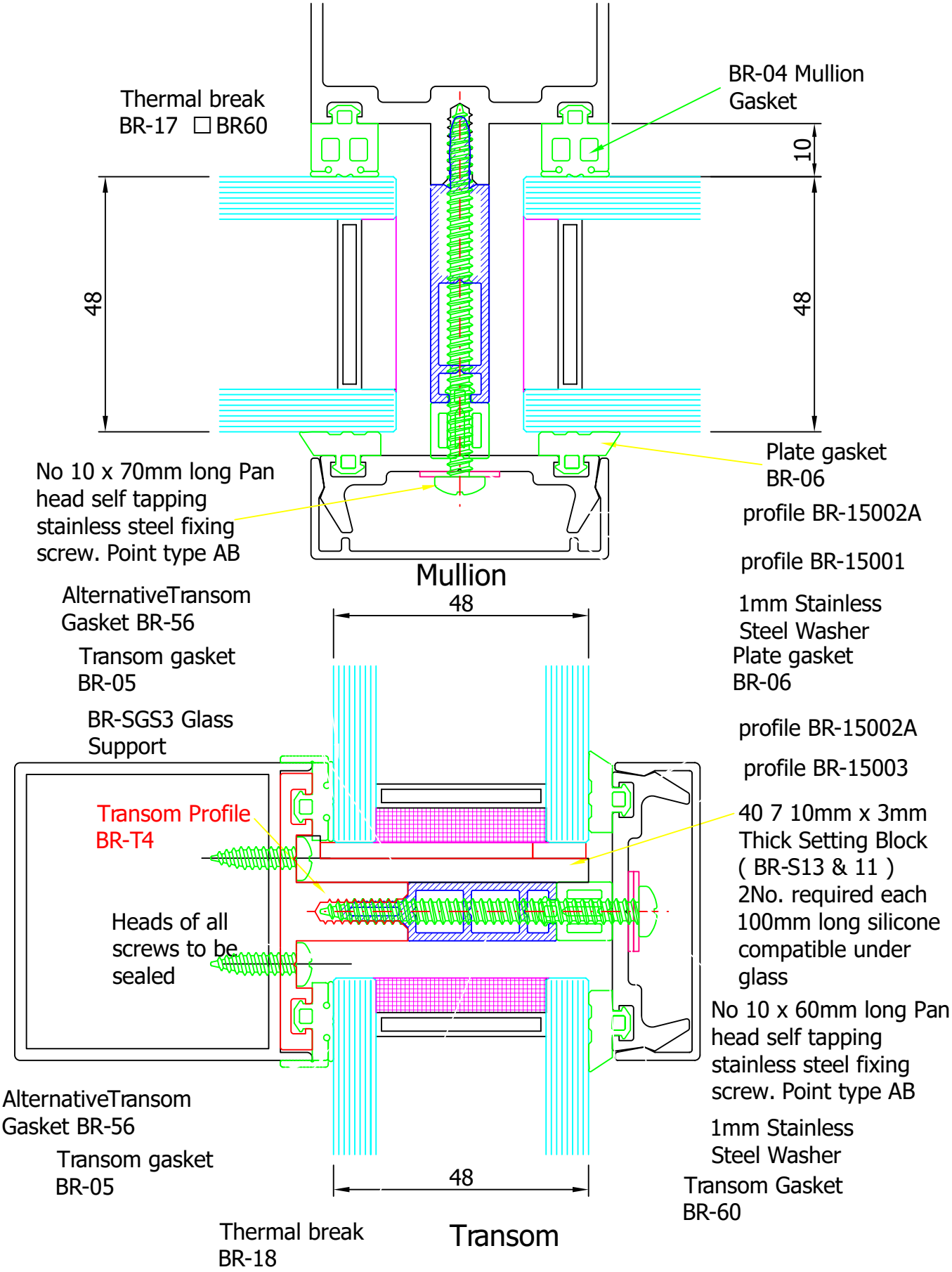

## Section61 - Glazing Options - Structural Glazed

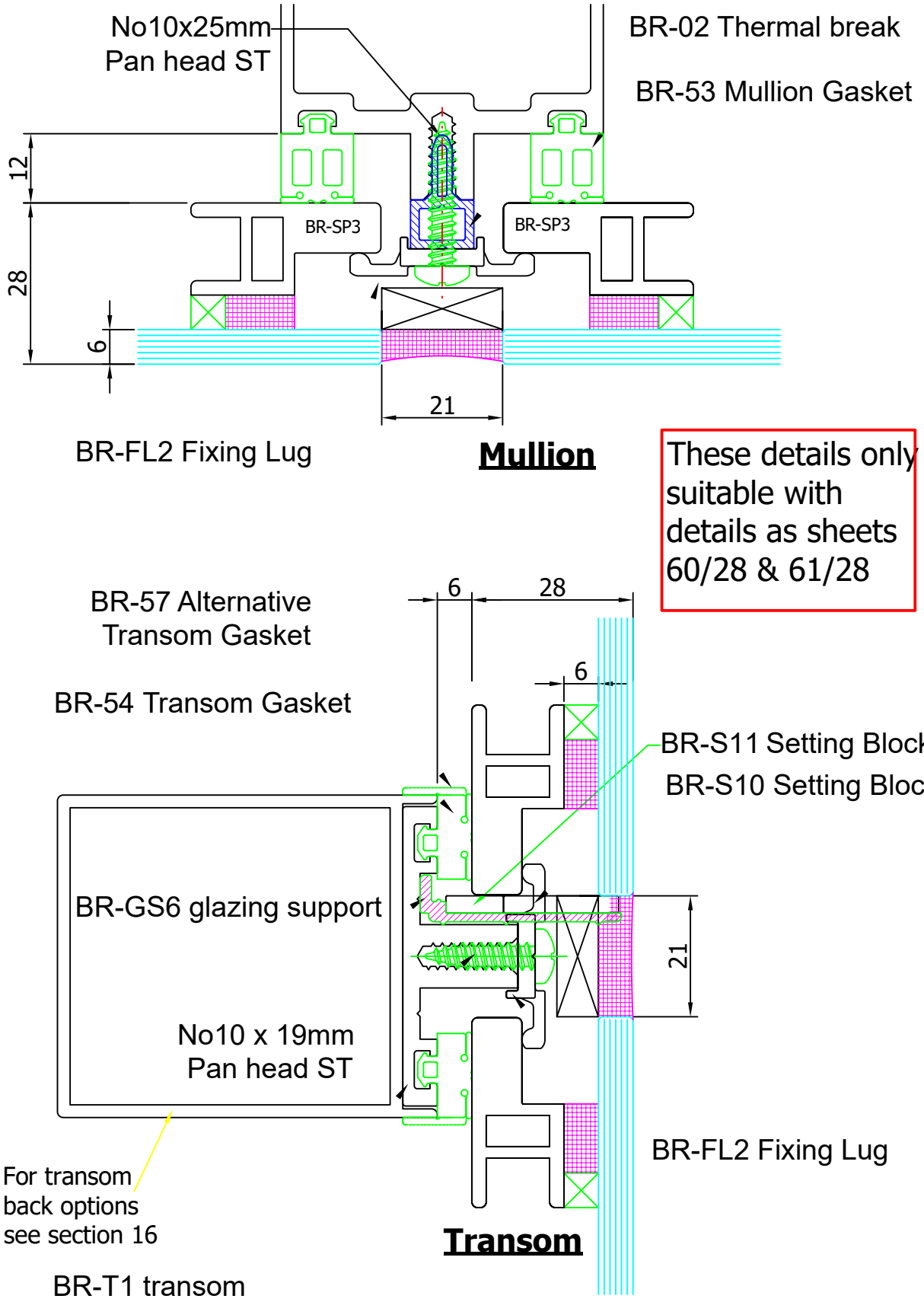

## Section61 - Glazing Options - Structural Glazed

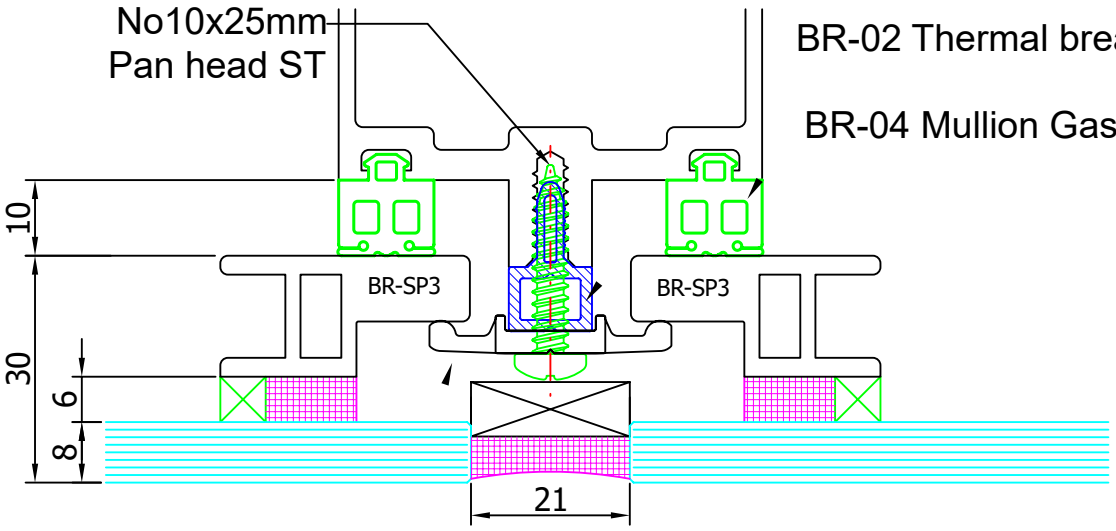


**Mullion**

Fixing Lug BR-FL2

These details only suitable with details as sheets 60/30 & 61/30

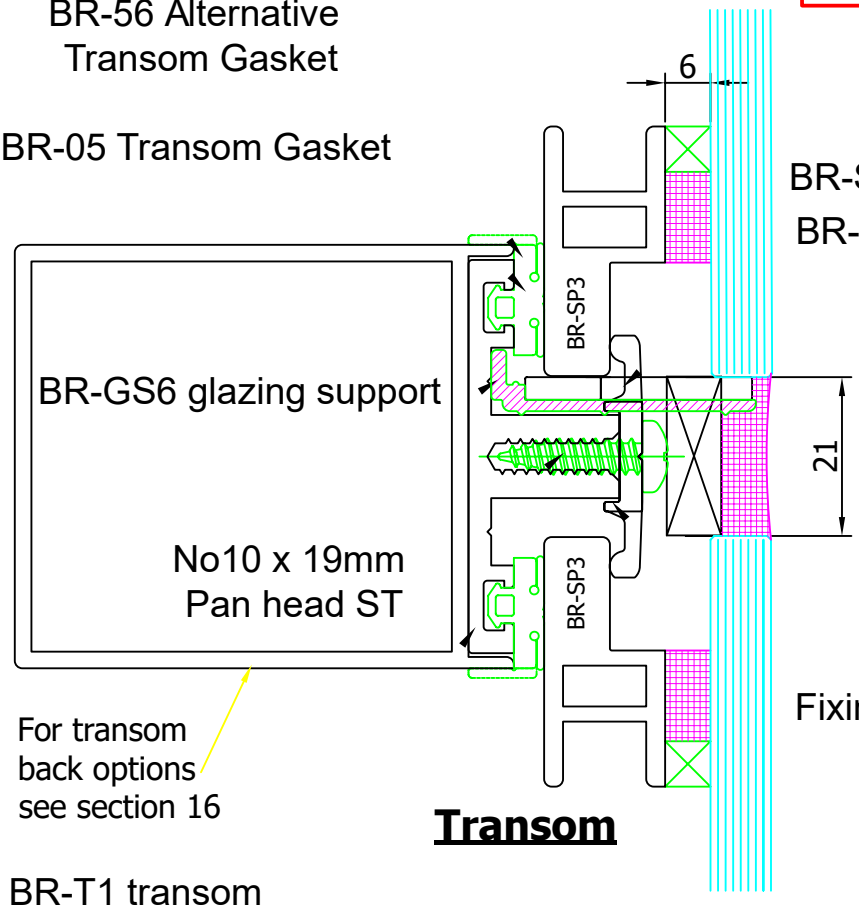


**Transom**

## Section61 - Glazing Options - Structural Glazed

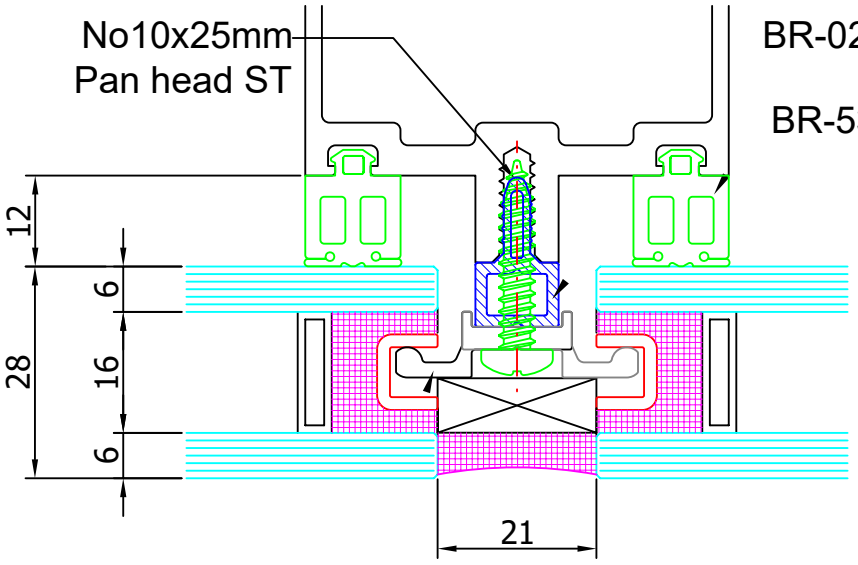


**Mullion**

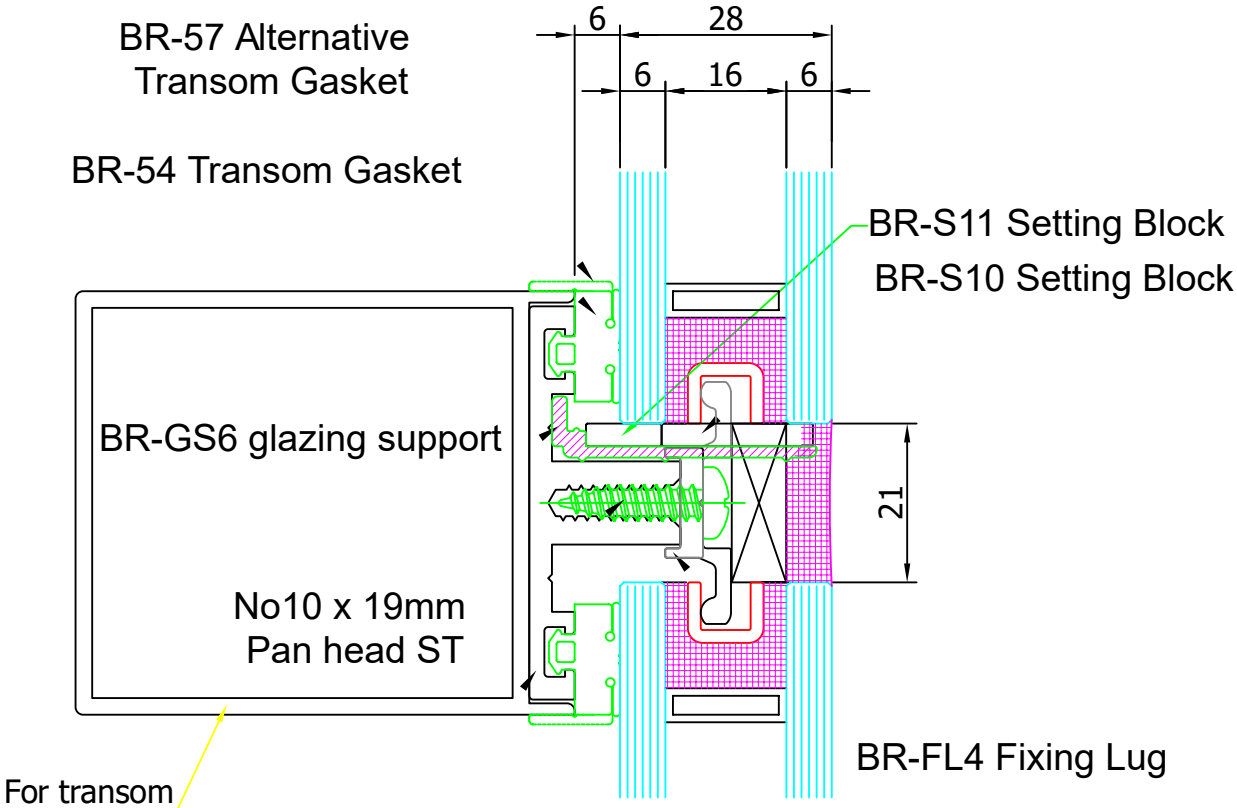


**Transom**

BR-T1 transom

## Section61 - Glazing Options - Structural Glazed

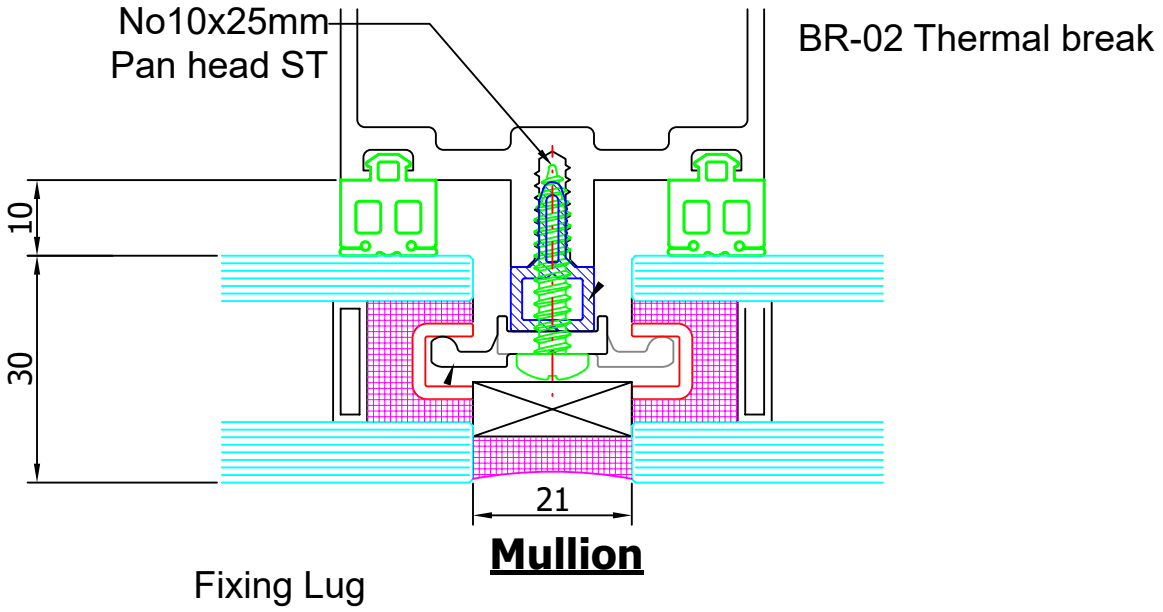


**Mullion**

BR-56 Alternative
Transom Gasket

| Inner Glass thickness +/-1 (mm) | Transom | | | Mullion | | |
|---|---|---|---|---|---|---|
| | Lug RefB | Thermal reak | ScrewL Length | ug RefB | Thermal reak | Screw Length |
| 6.0 | BR-FL2 | NONE | 19.0 | BR-FL2 | BR-02 | 25.0 |
| 8.0 | BR-FL4 | NONE | 19.0 | BR-FL4 | BR-02 | 25.0 |

*Table is based on using a 16mm DGU Spacer

BR-05 Transom Gasket

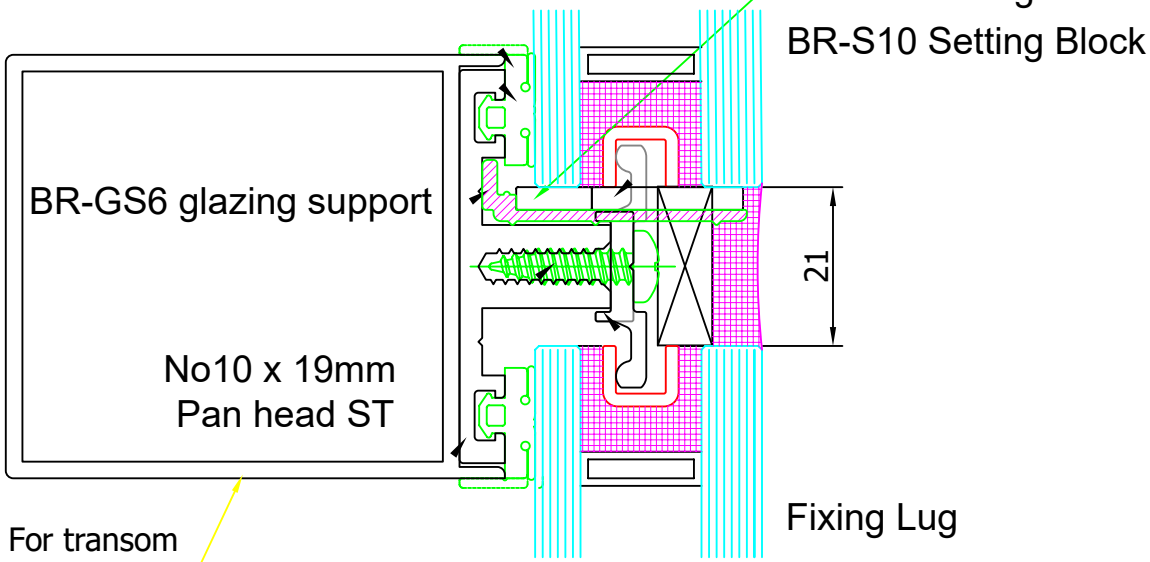


**Transom**

BR-T1 transom

## Section61 - Glazing Options - Structural Glazed

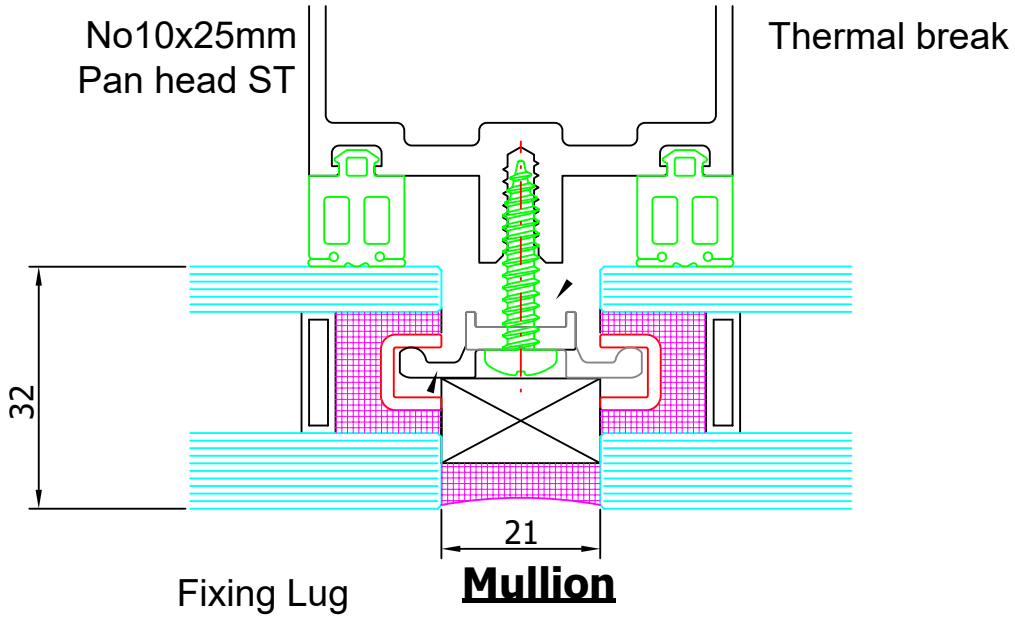


BR-57 Alternative Transom Gasket

BR-54 Transom Gasket

| Inner Glass thickness +/-1 (mm) | Transom | | | Mullion | | |
|---|---|---|---|---|---|---|
| | LugT RefB | hermal reak | Screw Length | Lug RefB | Thermal reak | Screw Length |
| 6.0 | BR-FL3 | NONE | 19.0 | BR-FL4 | BR-02 | 25.0 |
| 8.0 | BR-FL2 | NONE | 19.0 | BR-FL3 | BR-65 | 32.0 |
| 10.0 | BR-FL4 | NONE | 19.0 | BR-FL2 | BR-65 | 32.0 |

*Table is based on using a 16mm DGU Spacer

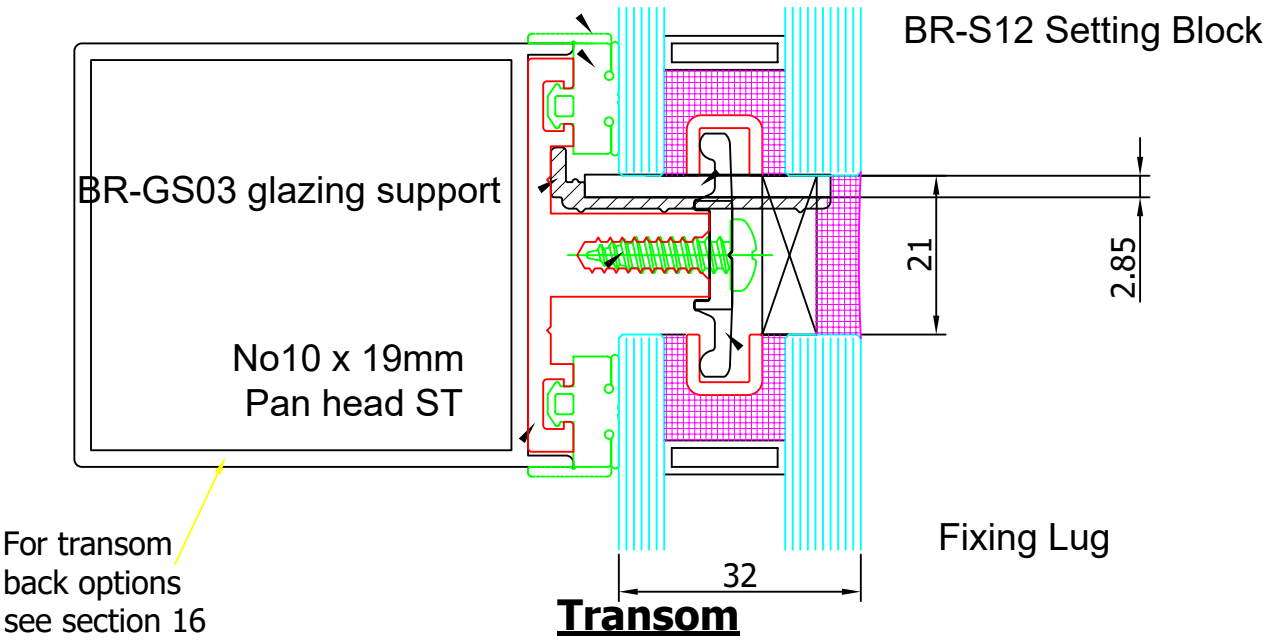


BR-T4 transom

## Section61 - Glazing Options - Structural Glazed

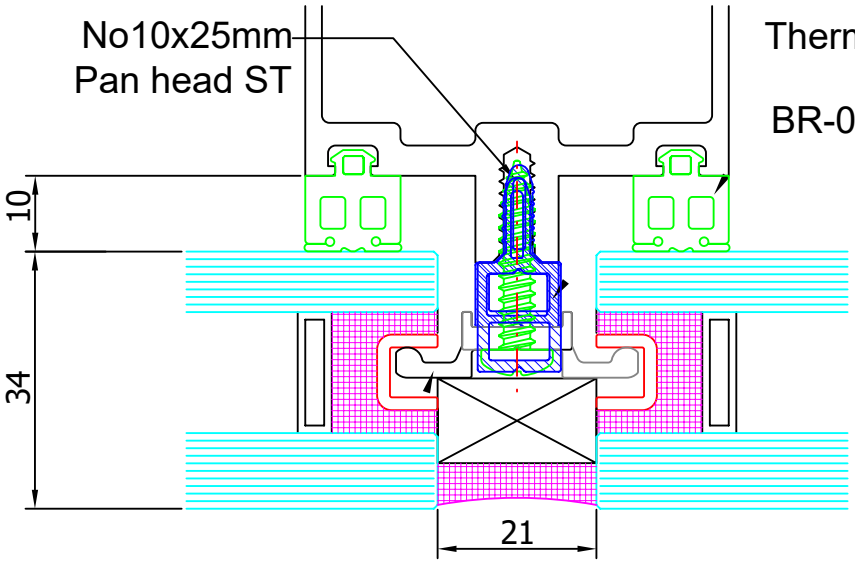


Fixing Lug

**Mullion**

BR-56 Alternative Transom Gasket

BR-05 Transom Gasket

| Inner Glass thickness +/-1 (mm) | Transom | | | | Mullion | | |
|---|---|---|---|---|---|---|---|
| | Transom | Lug RefB | Thermal reak | Screw Length | Lug RefB | Thermal reak | Screw Length |
| 6.0 | BR-T1 | BR-FL2 | NONE | 19.0 | BR-FL2 | BR-02 | 25.0 |
| 8.0 | BR-T1 | BR-FL3 | NONE | 19.0 | BR-FL4 | BR-02 | 25.0 |
| 10.0 | BR-T4 | BR-FL2 | NONE | 19.0 | BR-FL3 | BR-65 | 32.0 |
| 12.0 | BR-T4 | BR-FL4 | NONE | 19.0 | BR-FL2 | BR-65 | 32.0 |

*Table is based on using a 16mm DGU Spacer

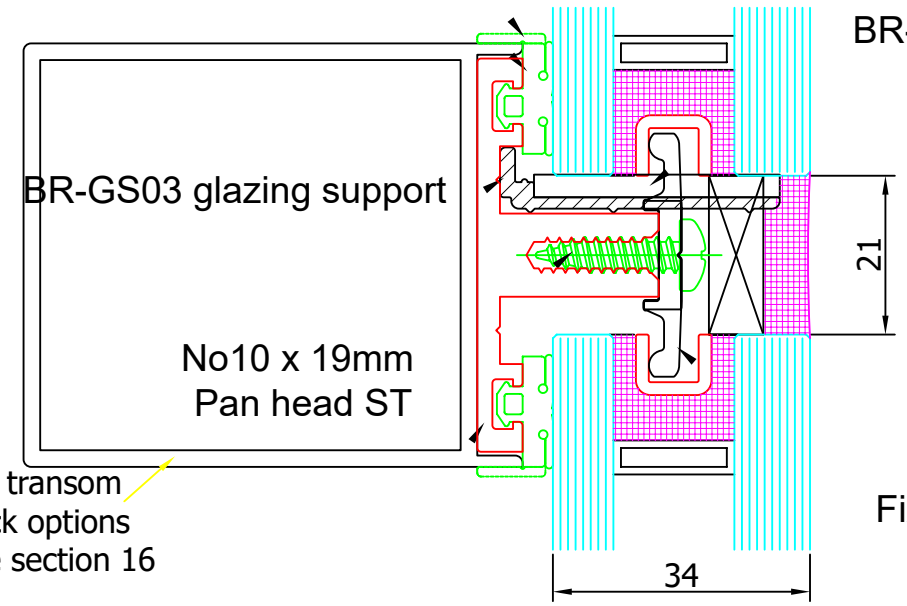


For transom back options see section 16

Fixing Lug

**Transom**

BR-T1 transom for 6mm inner glass
BR-T4 for other thickness

## Section61 - Glazing Options - Structural Glazed

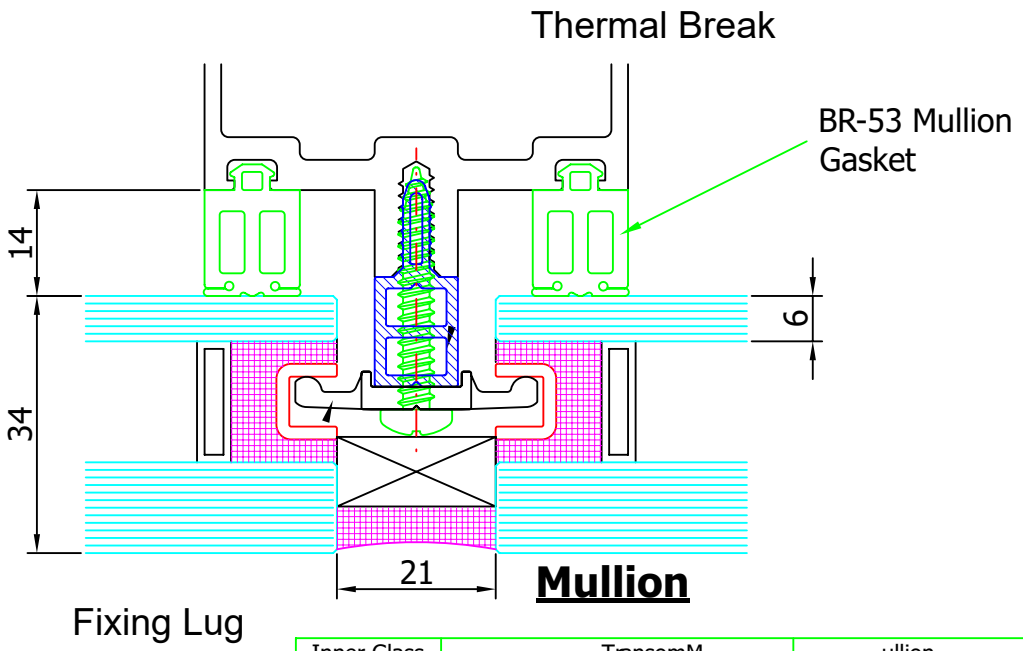


| Inner Glass thickness +/-1 (mm) | TransomM | | | | ullion | | |
|---|---|---|---|---|---|---|---|
| | Transom | Lug RefB | Thermal reak | Screw Length | Lug RefB | Thermal reak | S crew Length |
| 6.0 | BR-T1 | BR-FL3 | BR-64 | 25.0 | BR-FL3 | BR-653 | 2.0 |
| 8.0 | BR-T1 | BR-FL2 | BR-64 | 25.0 | BR-FL2 | BR-653 | 2.0 |
| 10.0 | BR-T1 | BR-FL4 | BR-64 | 25.0 | BR-FL4 | BR-653 | 2.0 |
| 12.0 | BR-T4 | BR-FL2 | BR-64 | 25.0 | BR-FL3 | BR-73 | 38.0 |
| 14.0 | BR-T4 | BR-FL4 | BR-64 | 25.0 | BR-FL2 | BR-733 | 8.0 |
| 16.0 | BR-T4 | BR-FL4 | BR-02 | 25.0 | BR-FL4 | BR-733 | 8.0 |

*Table is based on using a 16mm DGU Spacer

AlternativeTransom Gasket BR-58

Transom gasket BR-50

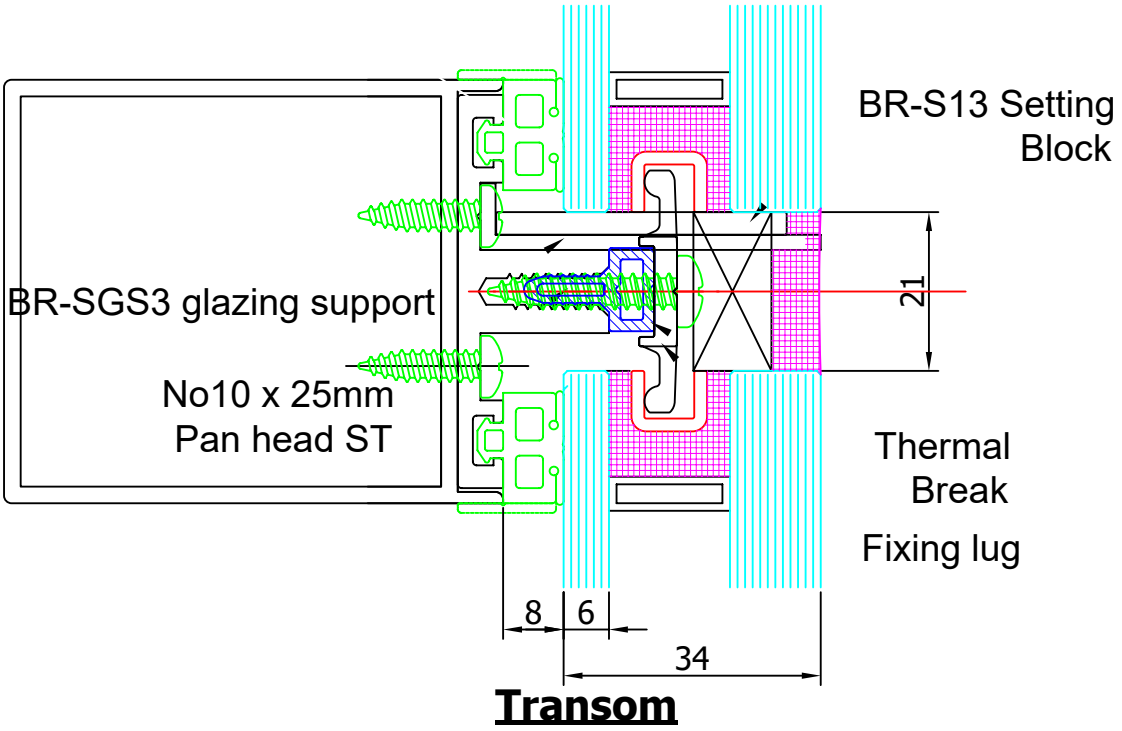

## Section61 - Glazing Options - Structural Glazed

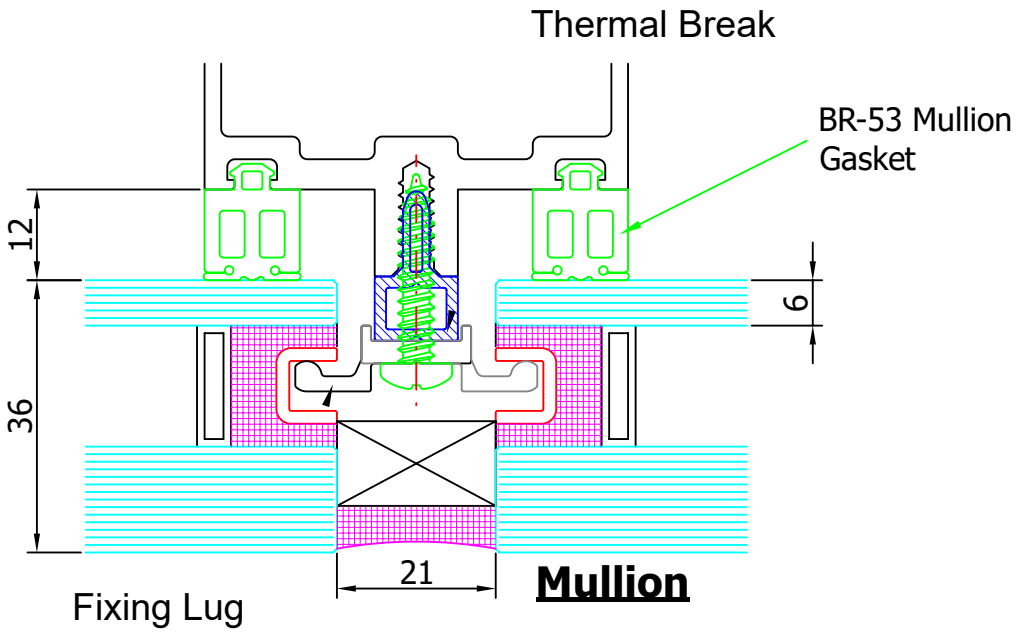


**Mullion**

| Inner Glass thickness +/-1 (mm) | TransomM | | | | ullion | | |
|---|---|---|---|---|---|---|---|
| | Transom | Lug RefB | Thermal reak | S crew Length | Lug RefB | Thermal reak | Screw Length |
| 6.0 | BR-T1 | BR-FL4 | NONE | 19.0 | BR-FL4 | BR-02 | 25.0 |
| 8.0 | BR-T1 | BR-FL3 | BR-64 | 25.0 | BR-FL3 | BR-72 | 32.0 |
| 10.0 | BR-T1 | BR-FL2 | BR-64 | 25.0 | BR-FL2 | BR-72 | 32.0 |
| 12.0 | BR-T1 | BR-FL4 | BR-64 | 25.0 | BR-FL4 | BR-72 | 32.0 |
| 14.0 | BR-T4 | BR-FL2 | BR-64 | 25.0 | BR-FL3 | BR-73 | 38.0 |
| 16.0 | BR-T4 | BR-FL4 | BR-64 | 25.0 | BR-FL2 | BR-73 | 38.0 |

*Table is based on using a 16mm DGU Spacer

AlternativeTransom Gasket BR-58

Transom gasket BR-50

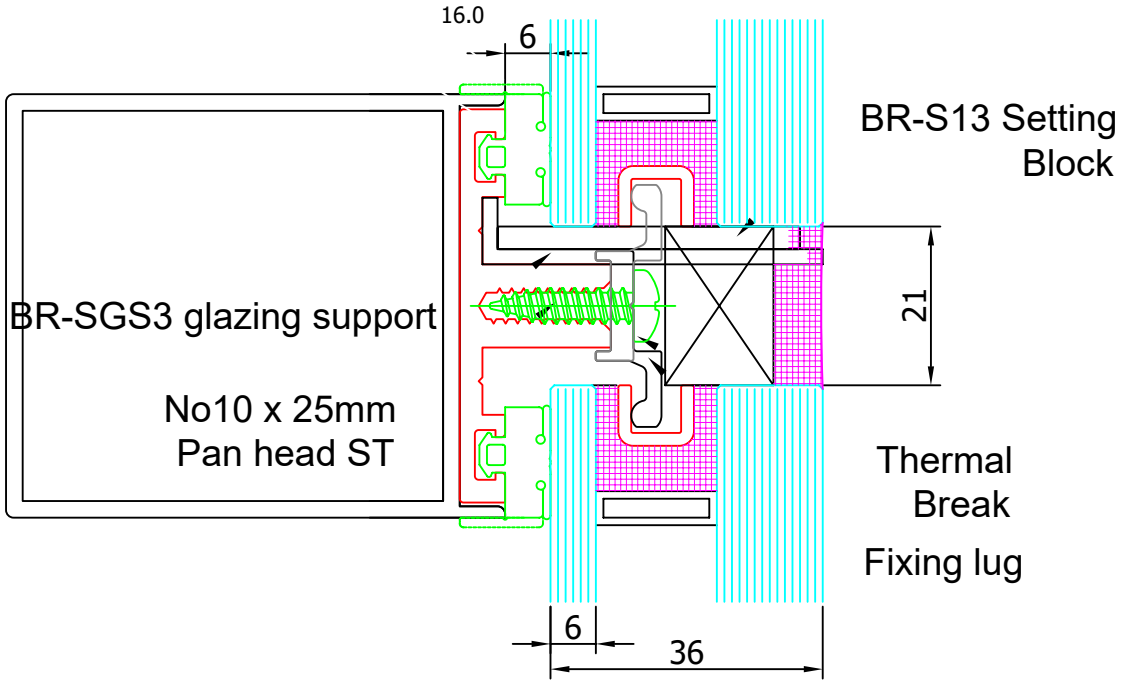


**Transom**

## Section61 - Glazing Options - Structural Glazed

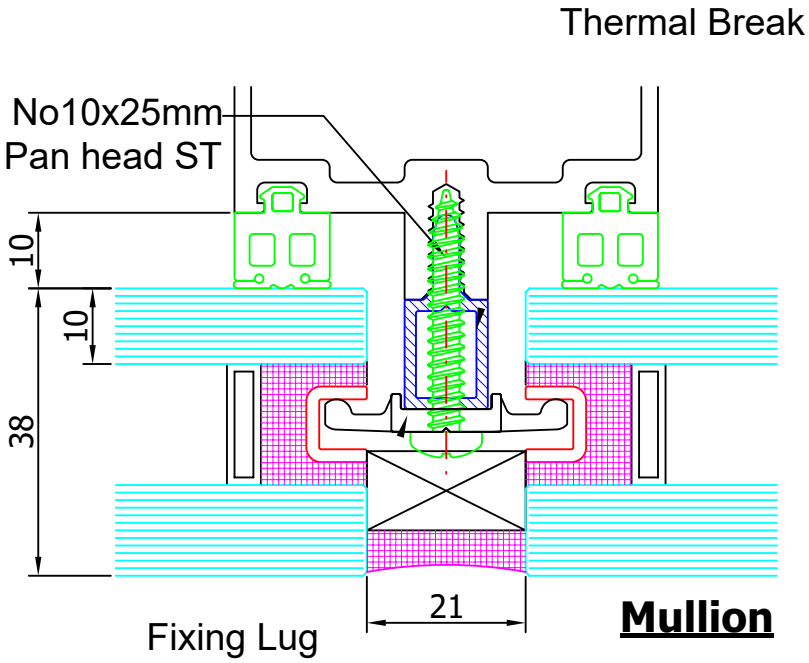


| Inner Glass thickness +/-1 (mm) | Transom | | | | Mullion | | |
|---|---|---|---|---|---|---|---|
| | Transom | Lug RefB | Thermal reak | Screw Length | Lug RefB | Thermal reak | Screw Length |
| 6.0 | BR-T1 | BR-FL2 | None | 19.0 | BR-FL2 | BR-02 | 25.0 |
| 8.0 | BR-T1 | BR-FL4 | None | 19.0 | BR-FL4 | BR-02 | 25.0 |
| 10.0 | BR-T1 | BR-FL3 | BR-64 | 25.0 | BR-FL3 | BR-72 | 32.0 |
| 12.0 | BR-T1 | BR-FL2 | BR-64 | 25.0 | BR-FL2 | BR-72 | 32.0 |
| 14.0 | BR-T1 | BR-FL4 | BR-64 | 25.0 | BR-FL4 | BR-72 | 32.0 |
| 16.0 | BR-T4 | BR-FL3 | BR-02 | 25.0 | BR-FL3 | BR-73 | 38.0 |

*Table is based on using a 16mm DGU Spacer

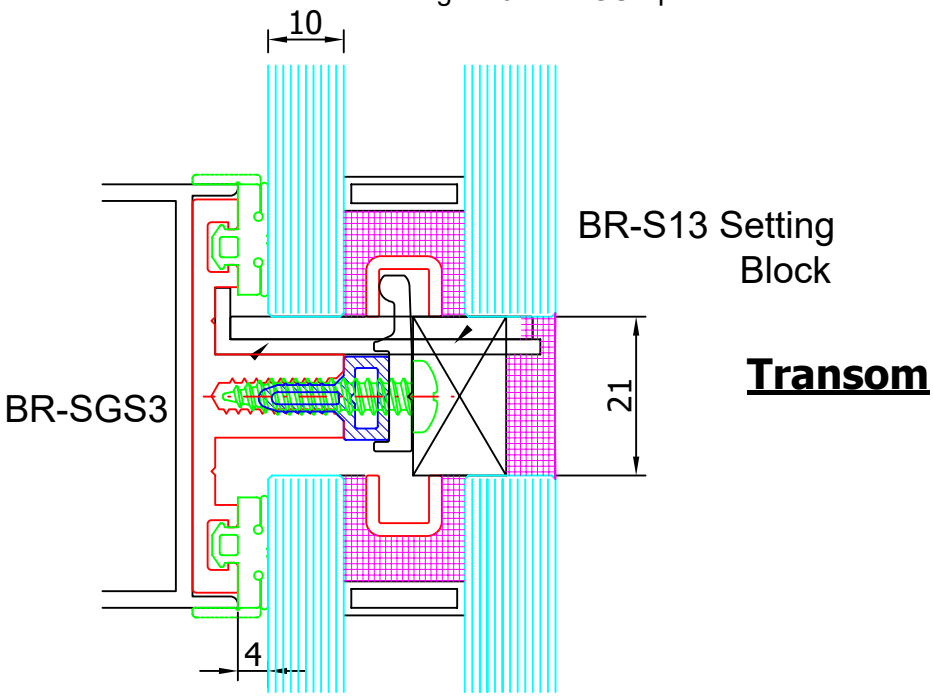

## Section61 - Glazing Options - Structural Glazed Carrier Frame Glazing

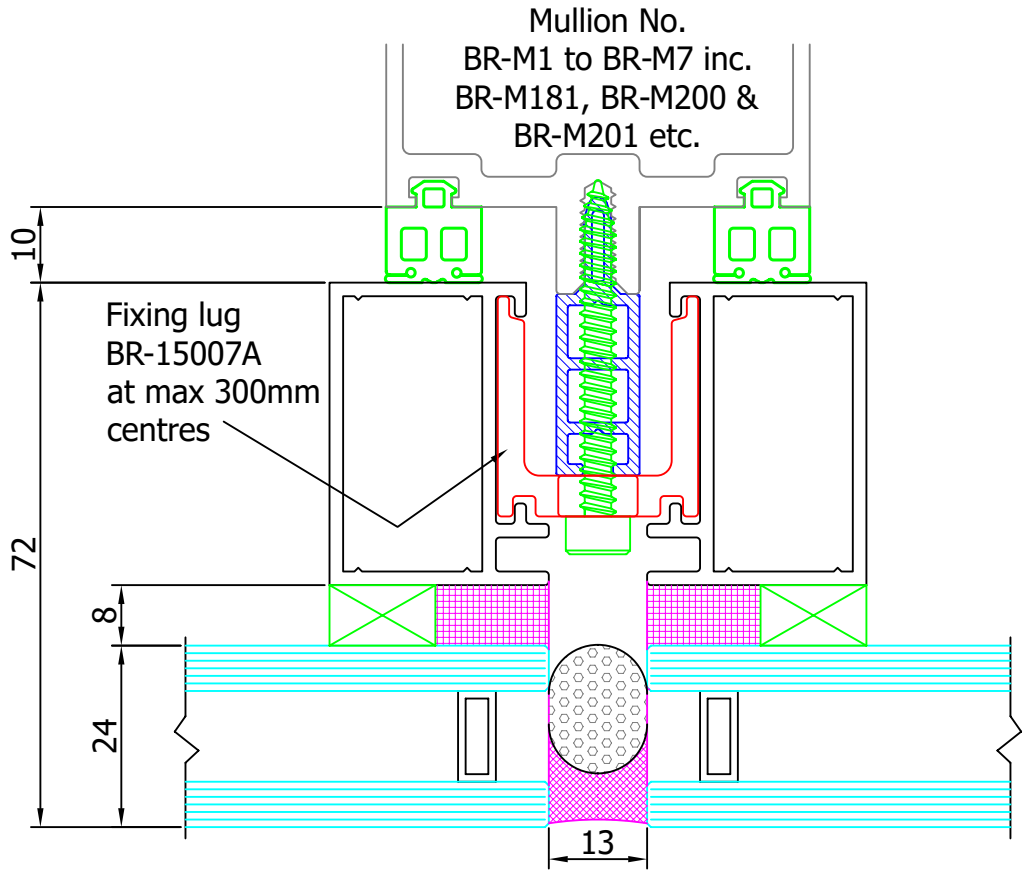


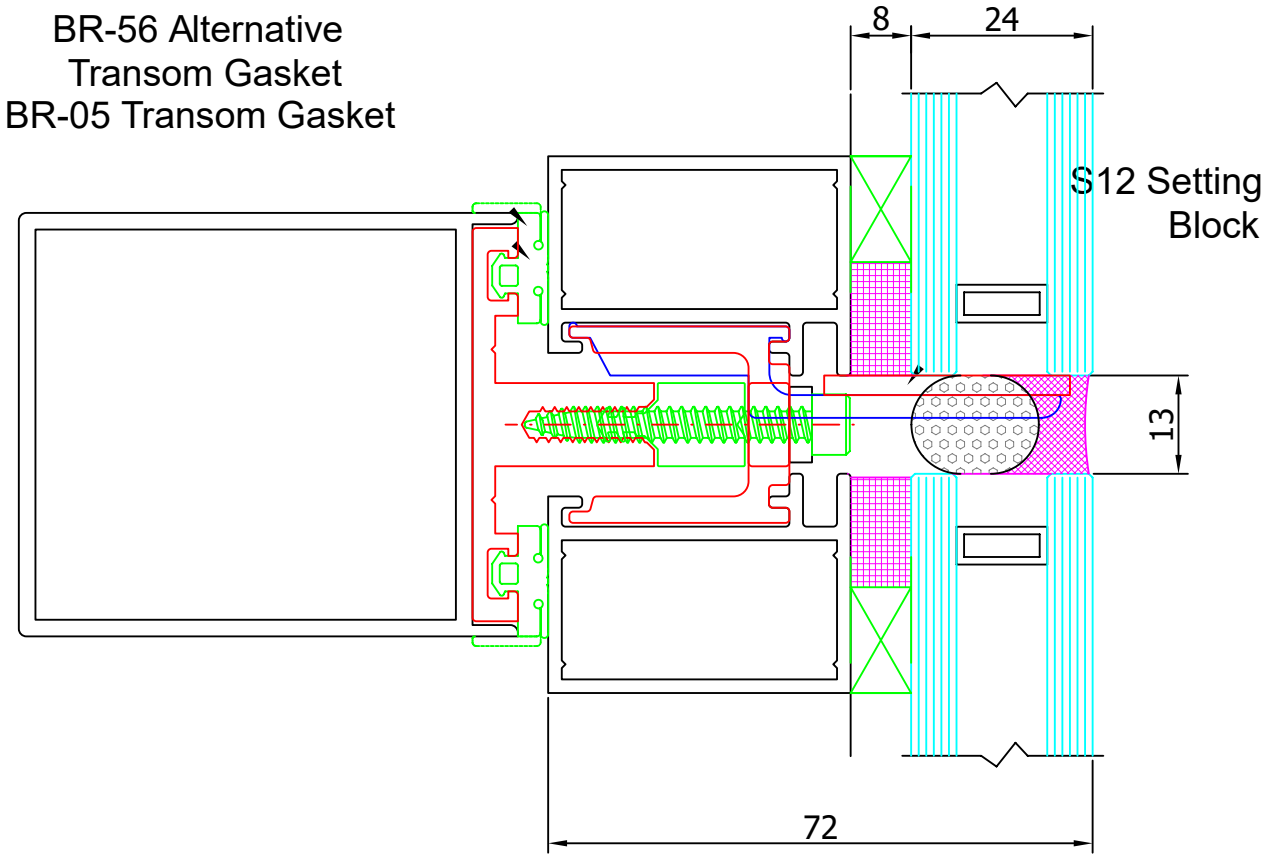

## Section61 - Glazing Options - Structural Glazed Carrier Frame Glazing

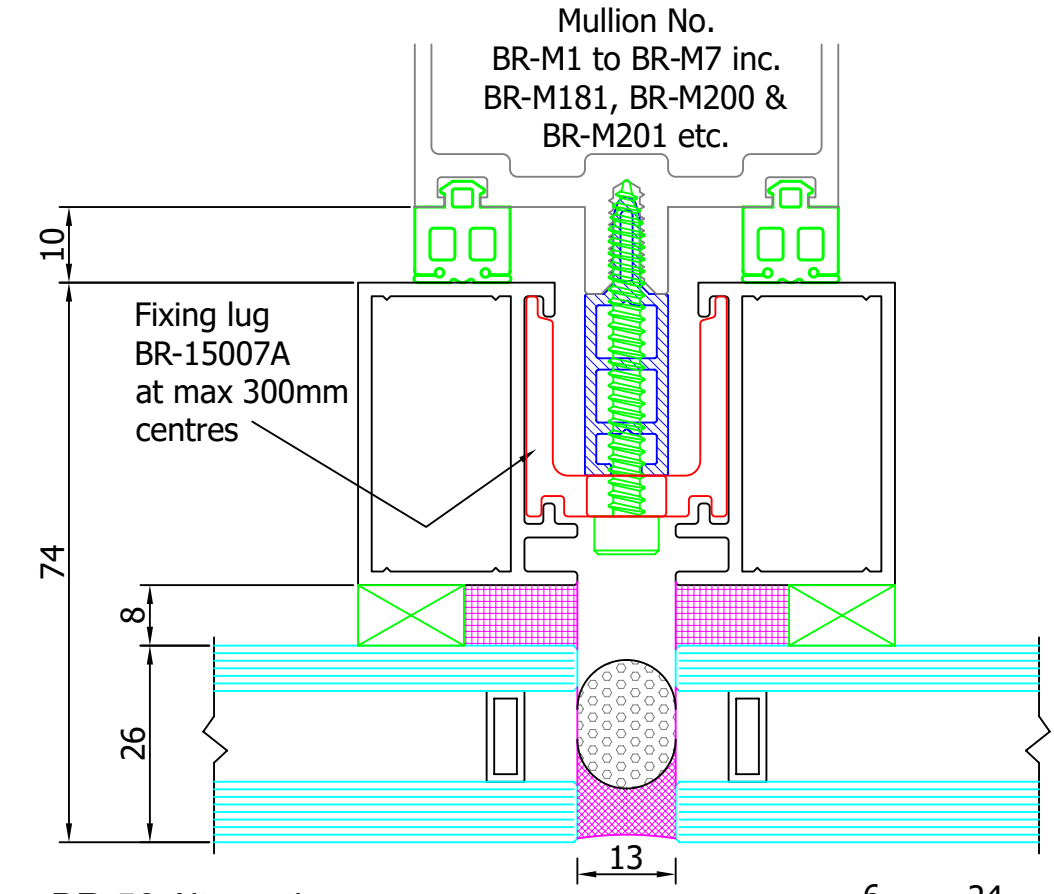


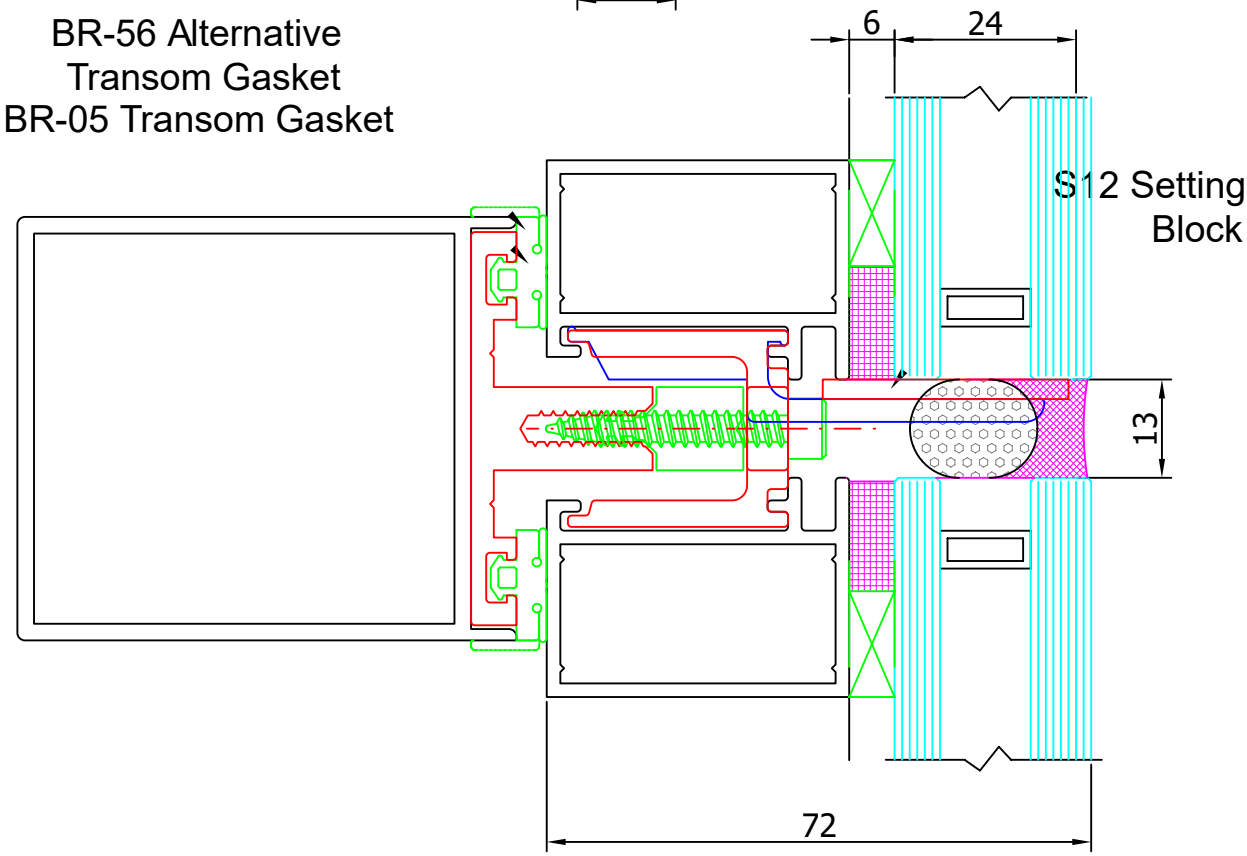

## Section61 - Glazing Options - Structural Glazed Carrier Frame Glazing

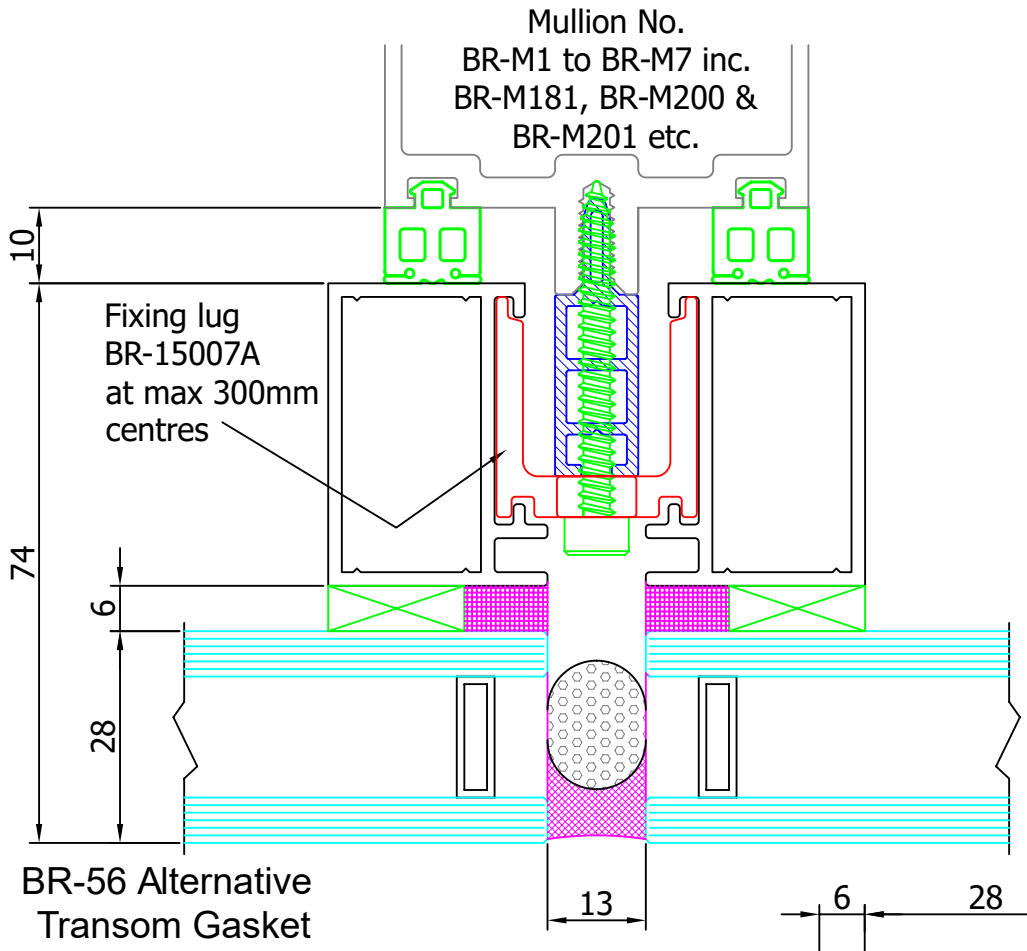


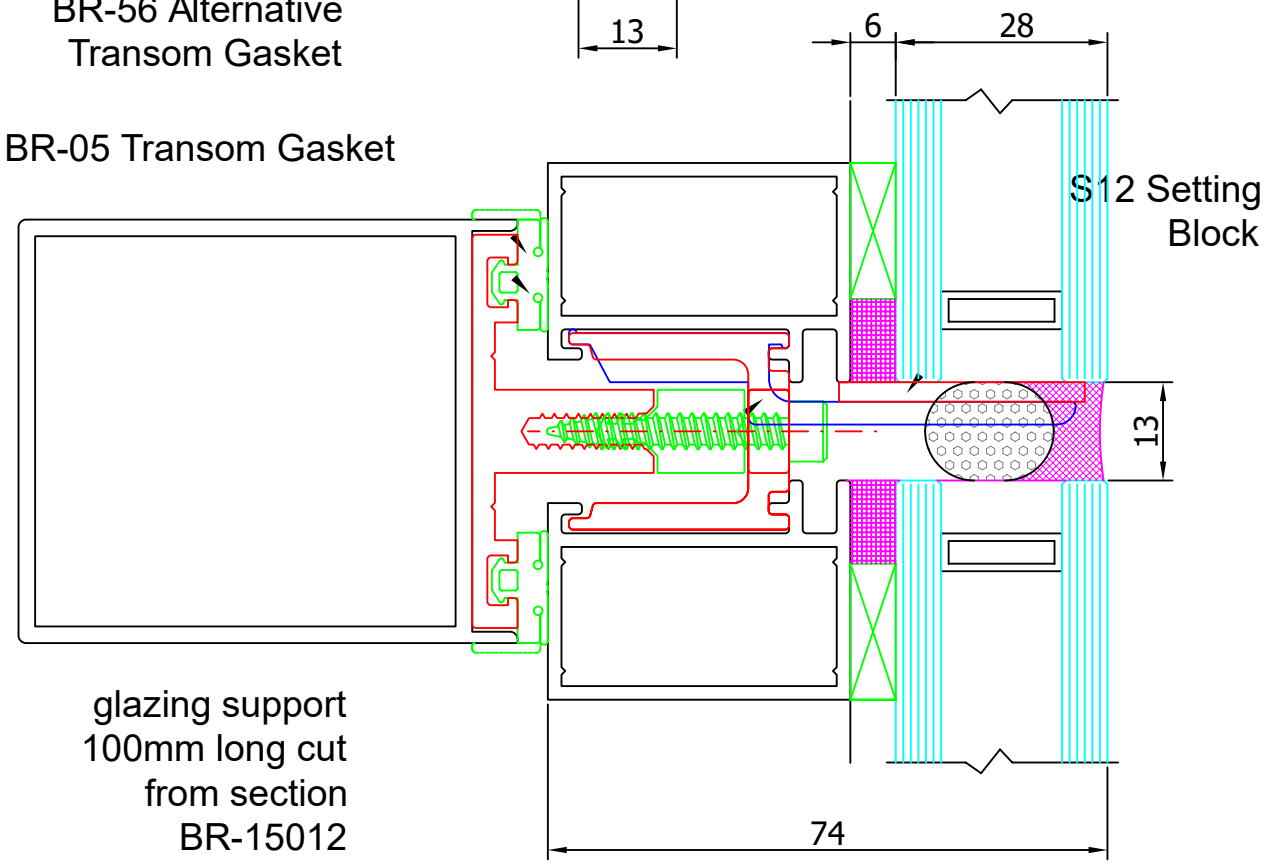

## Section61 - Glazing Options - Structural Glazed Carrier Frame Glazing

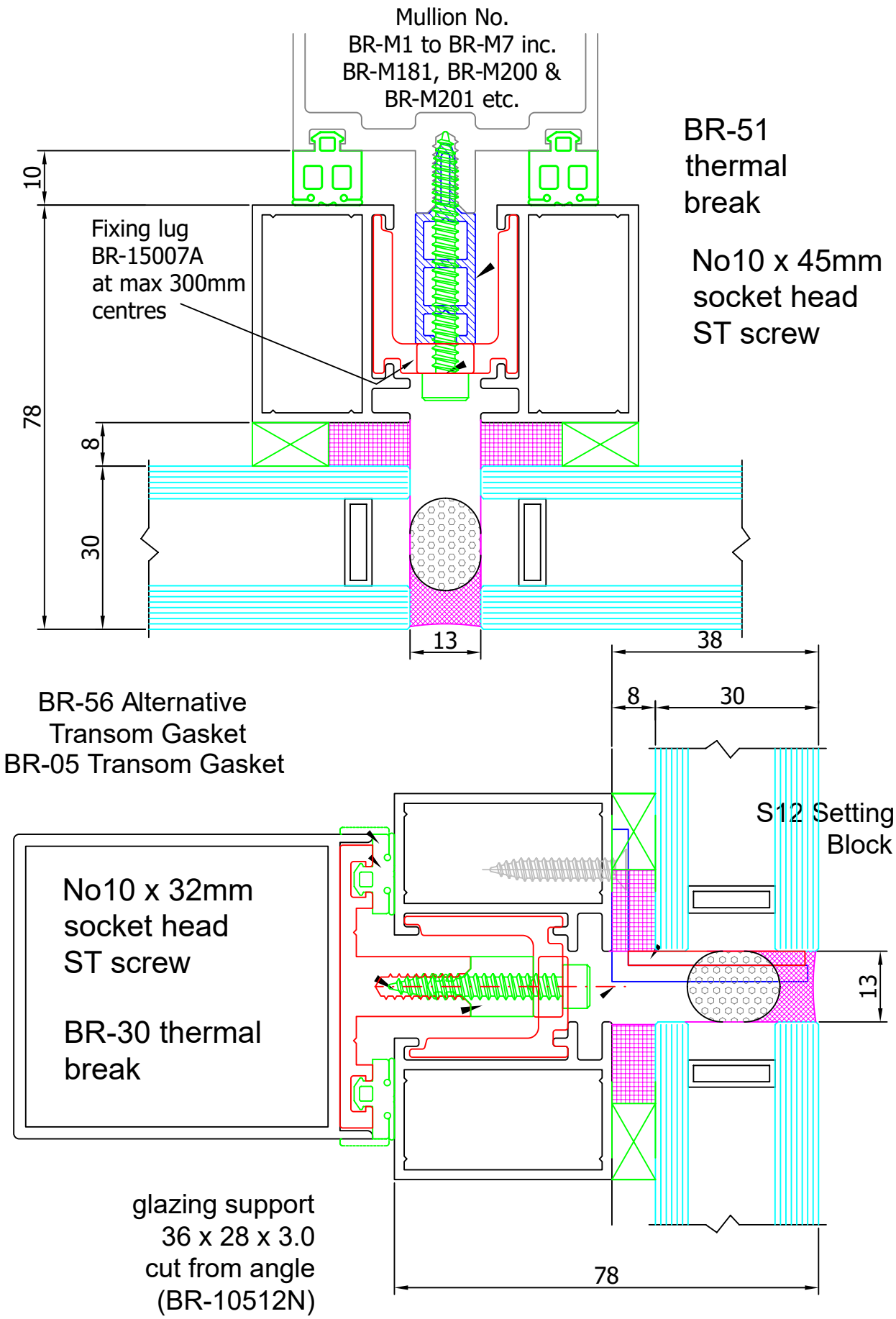

## Section61 - Glazing Options - Structural Glazed Carrier Frame Glazing

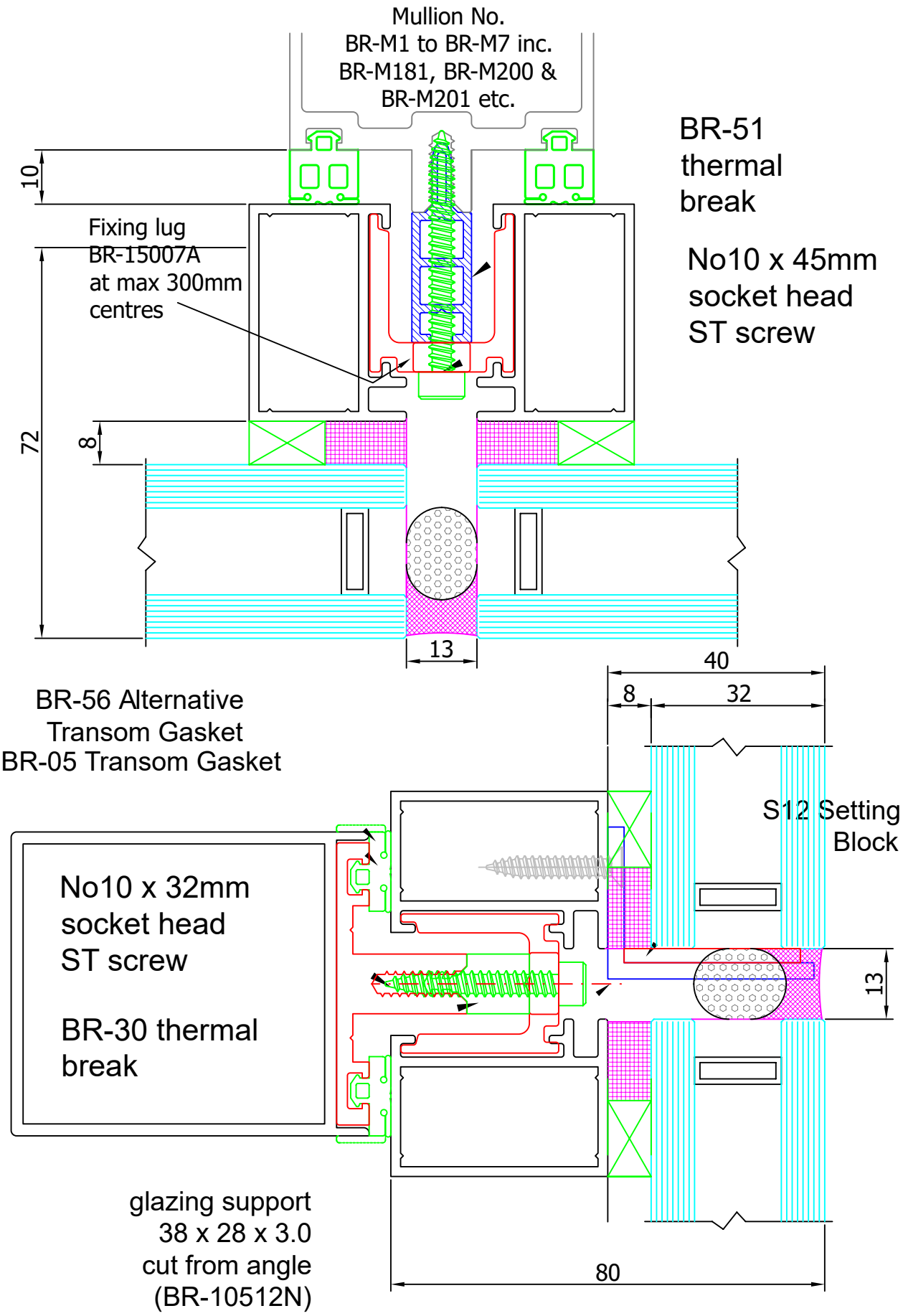

## Section63 - Extended Cappings

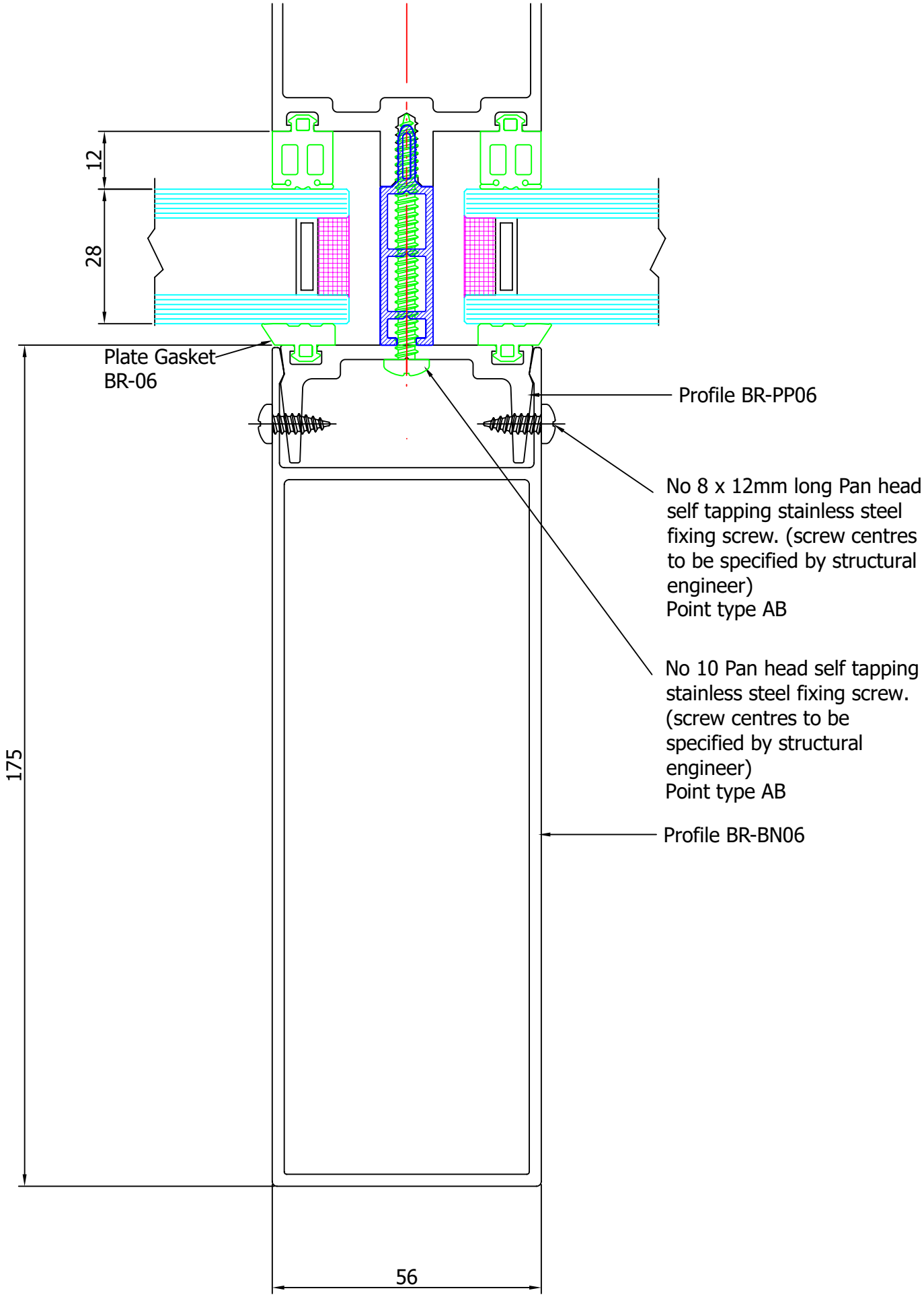

## Section63 - Extended Cappings

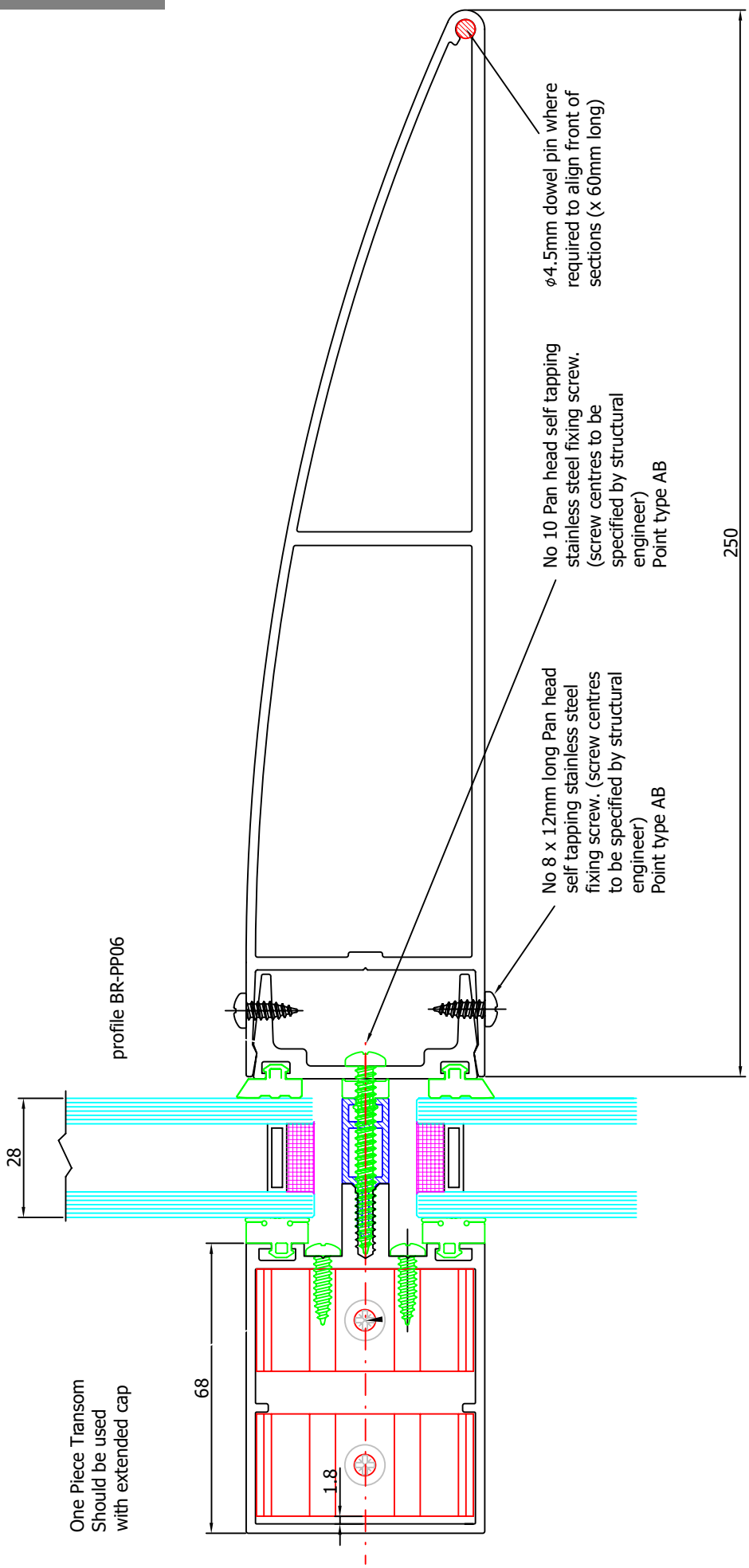

## Section64 - Glazing Fabrication Details

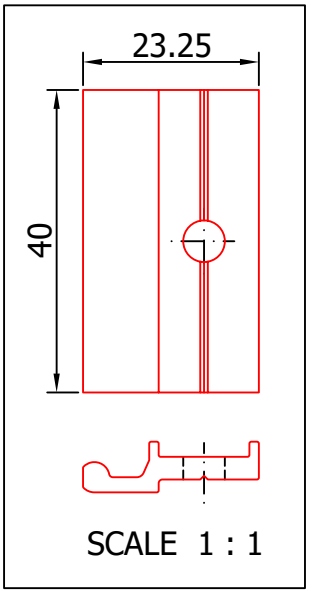


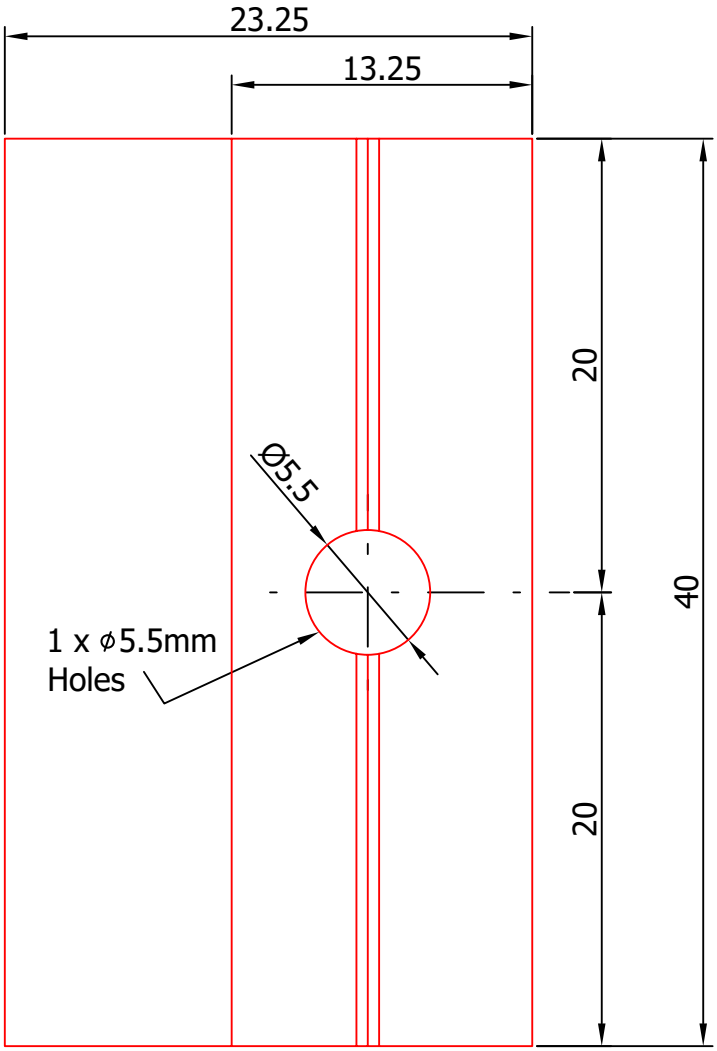


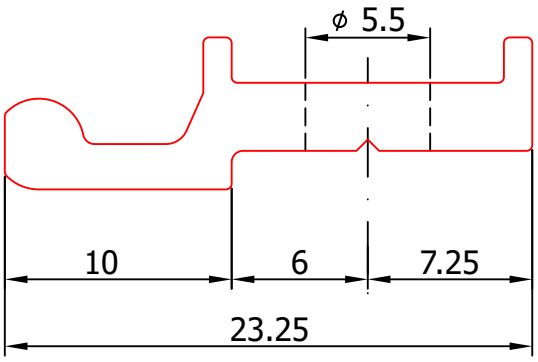


SCALE 3 : 1

## Section64 - Glazing Fabrication Details

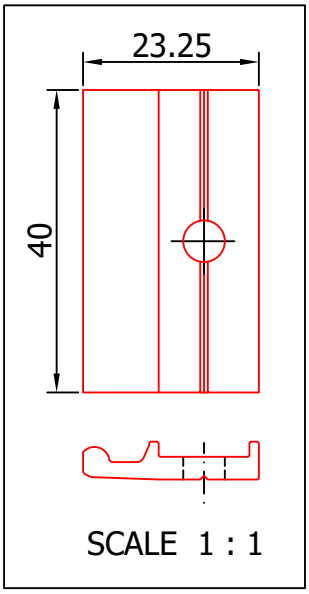


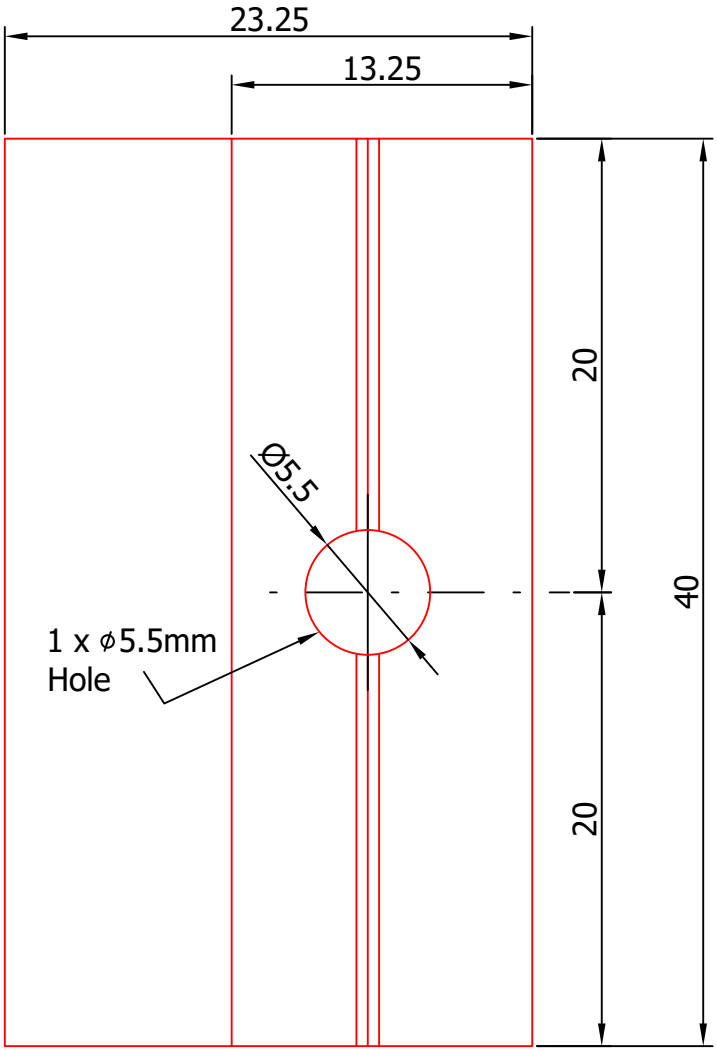


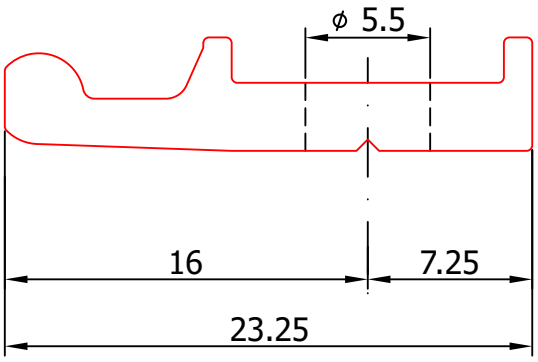


SCALE 3 : 1

## Section64 - Glazing Fabrication Details

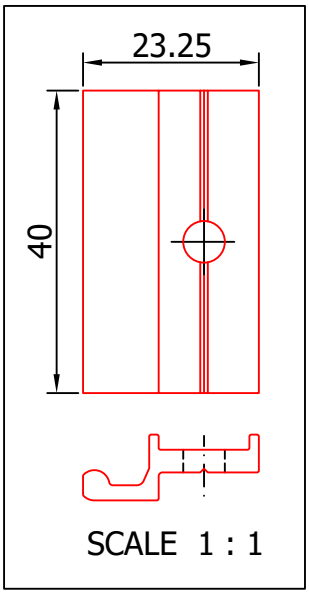


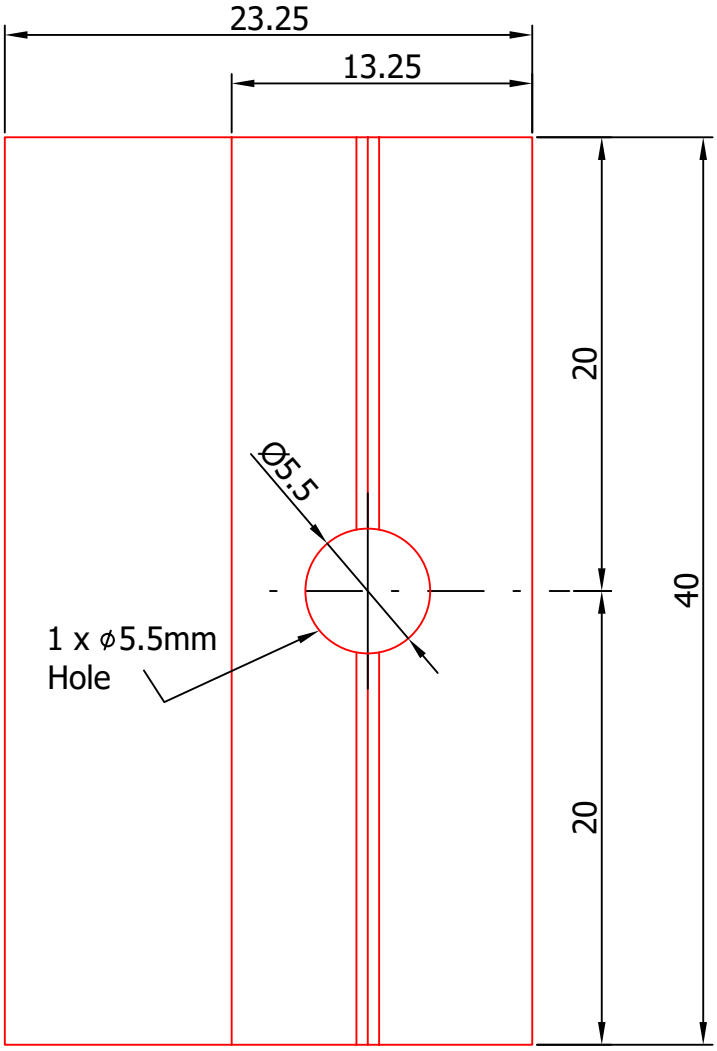


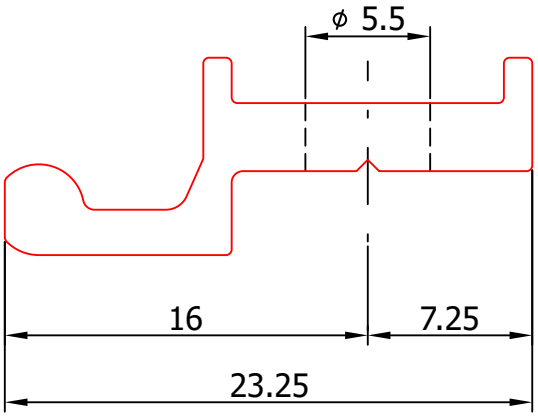


SCALE 3 : 1

## Section64 - Glazing Fabrication Details

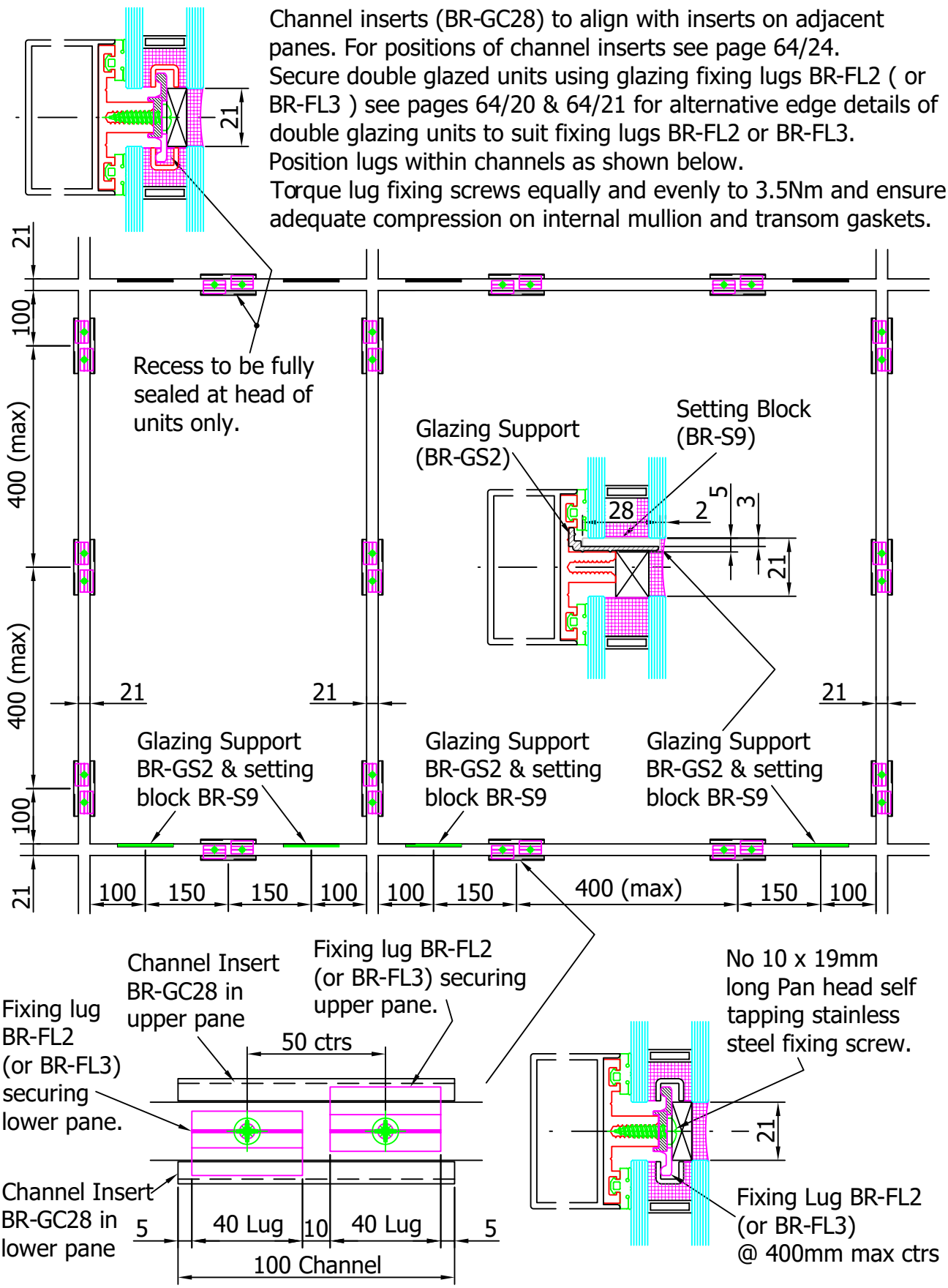

## Section64 - Glazing Fabrication Details

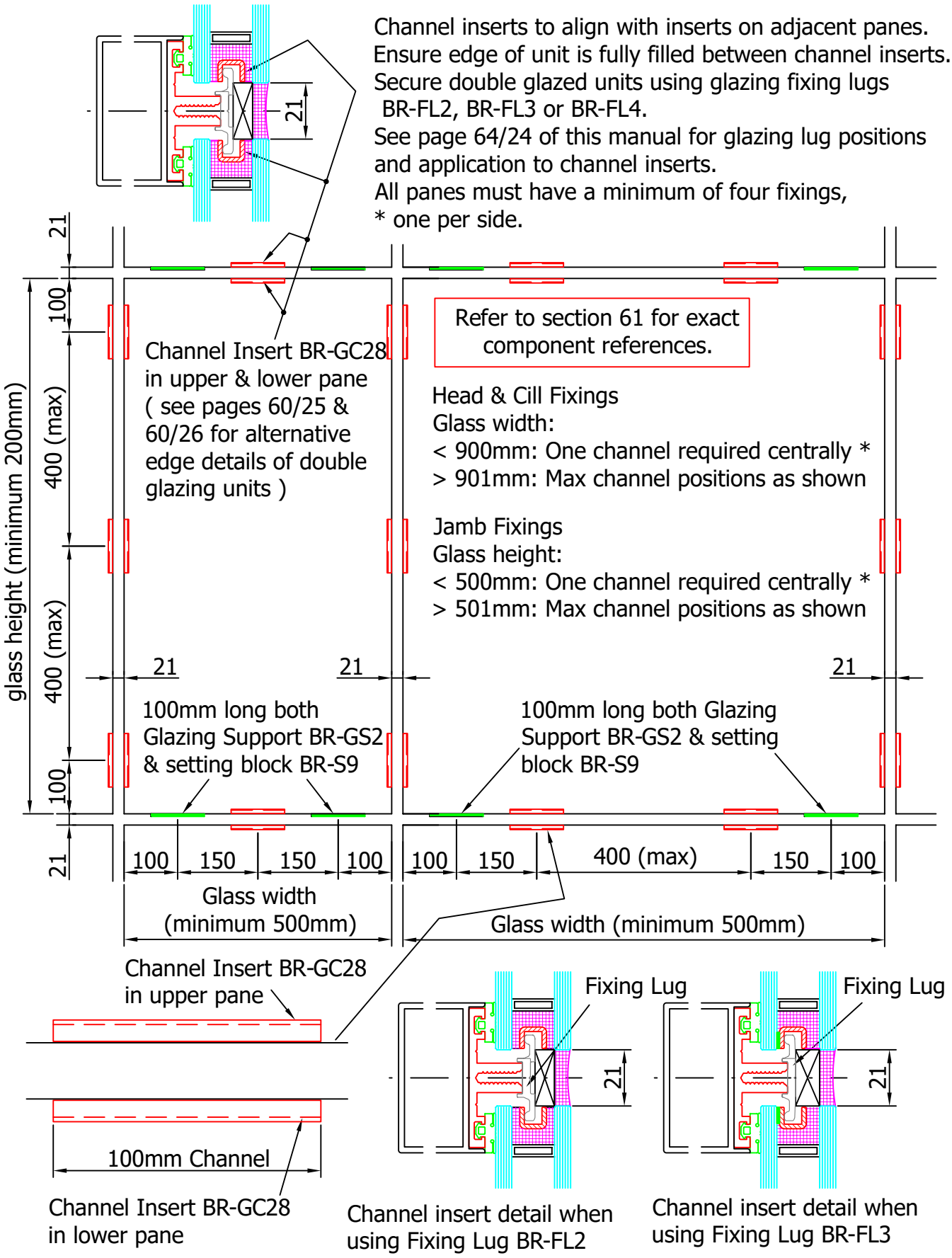

## Section64 - Glazing Fabrication Details

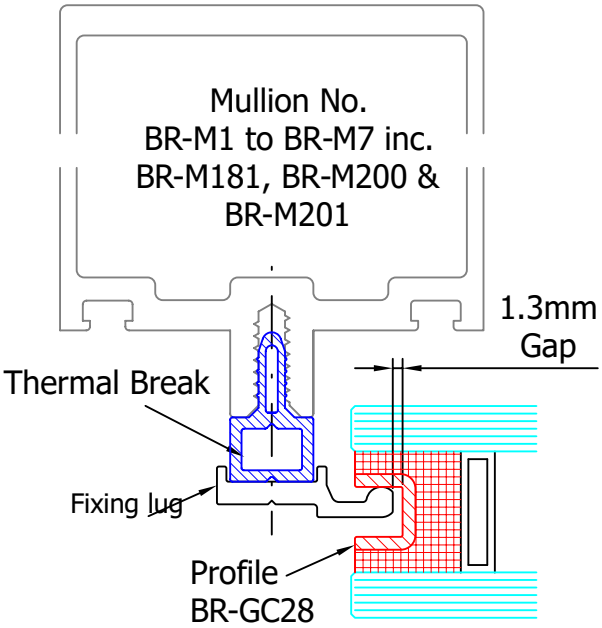


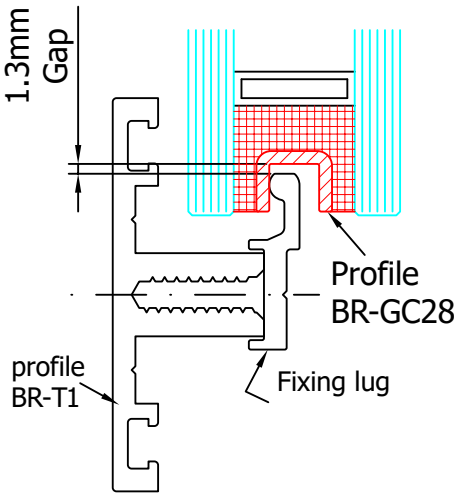


Refer to section 61 for exact component references.

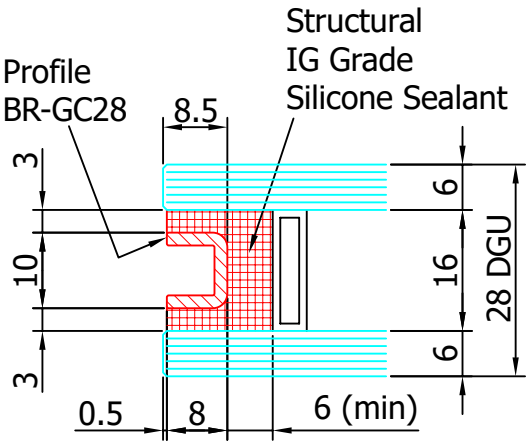


All Fixed Glazing to be recessed at both jamb edges ONLY as shown below to accommodate fixing lugs at 400mm max. centres.

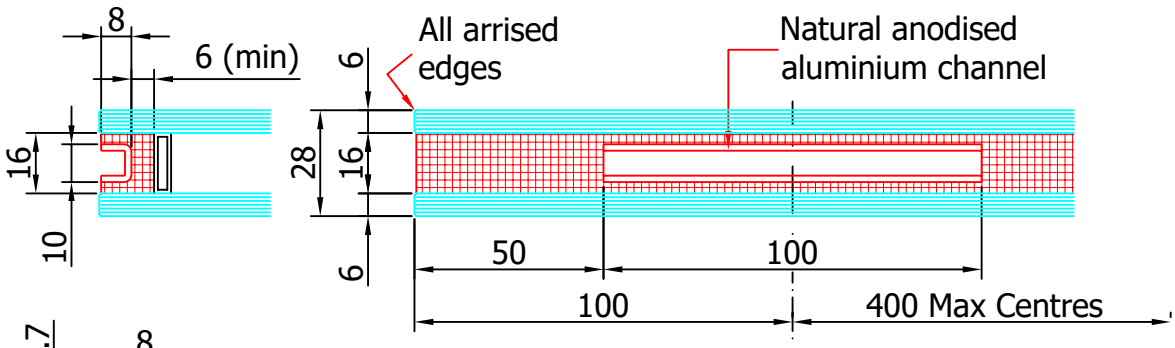


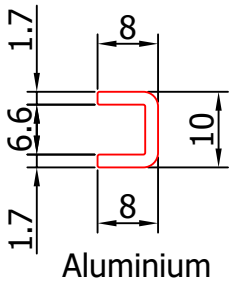


Aluminium
Channel Profile
Ref. BR-GC28

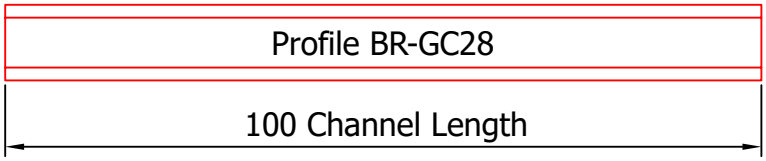

## Section64 - Glazing Fabrication Details

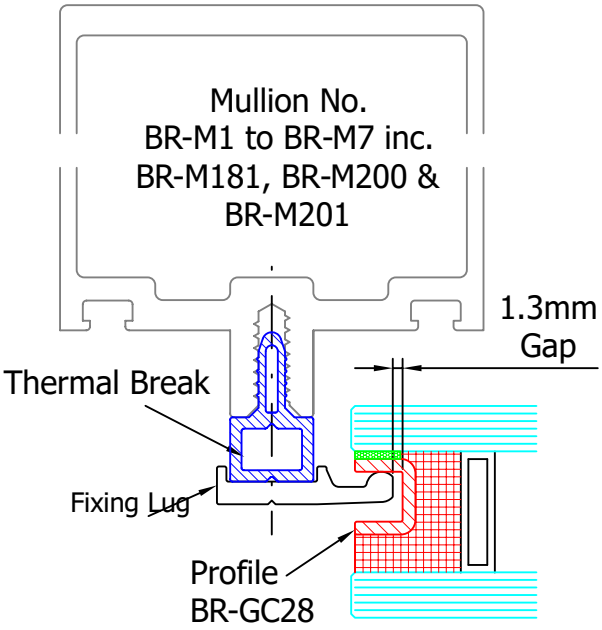


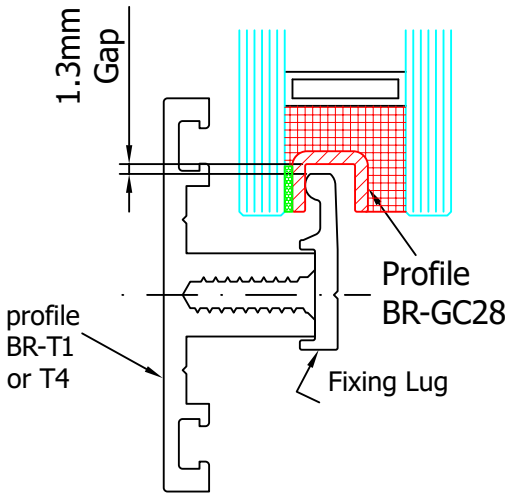


Refer to section 61 for exact component references.

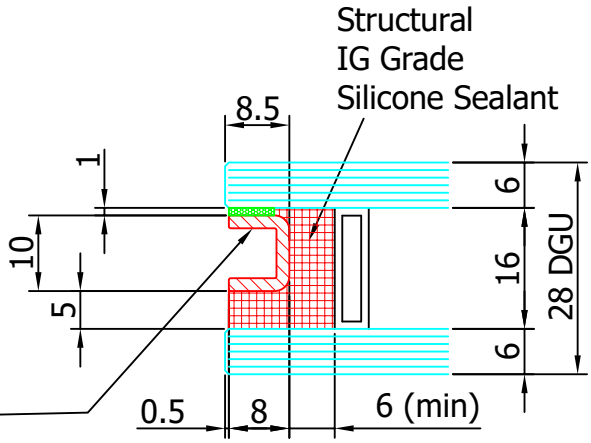


Profile BR-GC28
bonded to inner pane
with 1mm thick adhesive tape.
(tape to be compatible with
structural silicone sealant)

All Fixed Glazing to be recessed at both jamb edges ONLY as shown below to accommodate fixing lugs at 400mm max. centres.

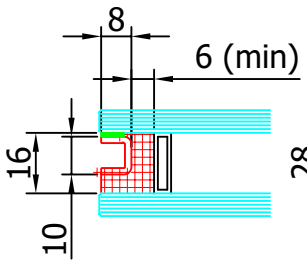


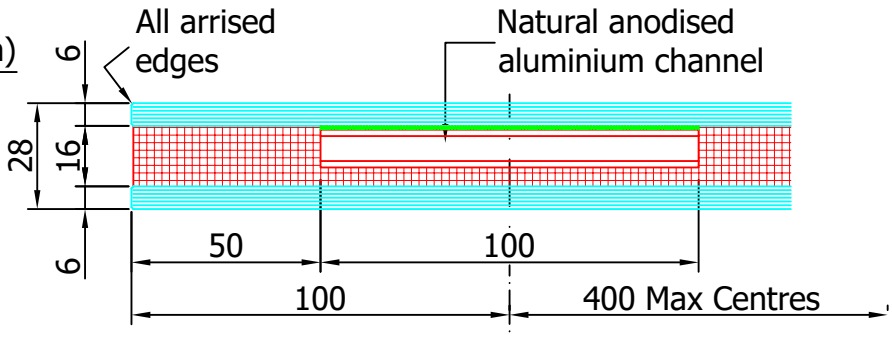


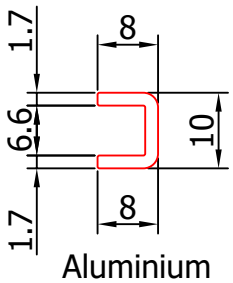


Aluminium
Channel Profile
Ref. BR-GC28

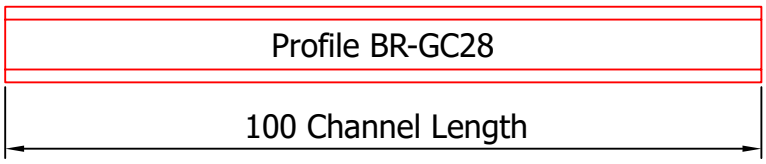

## Section64 - Glazing Fabrication Details

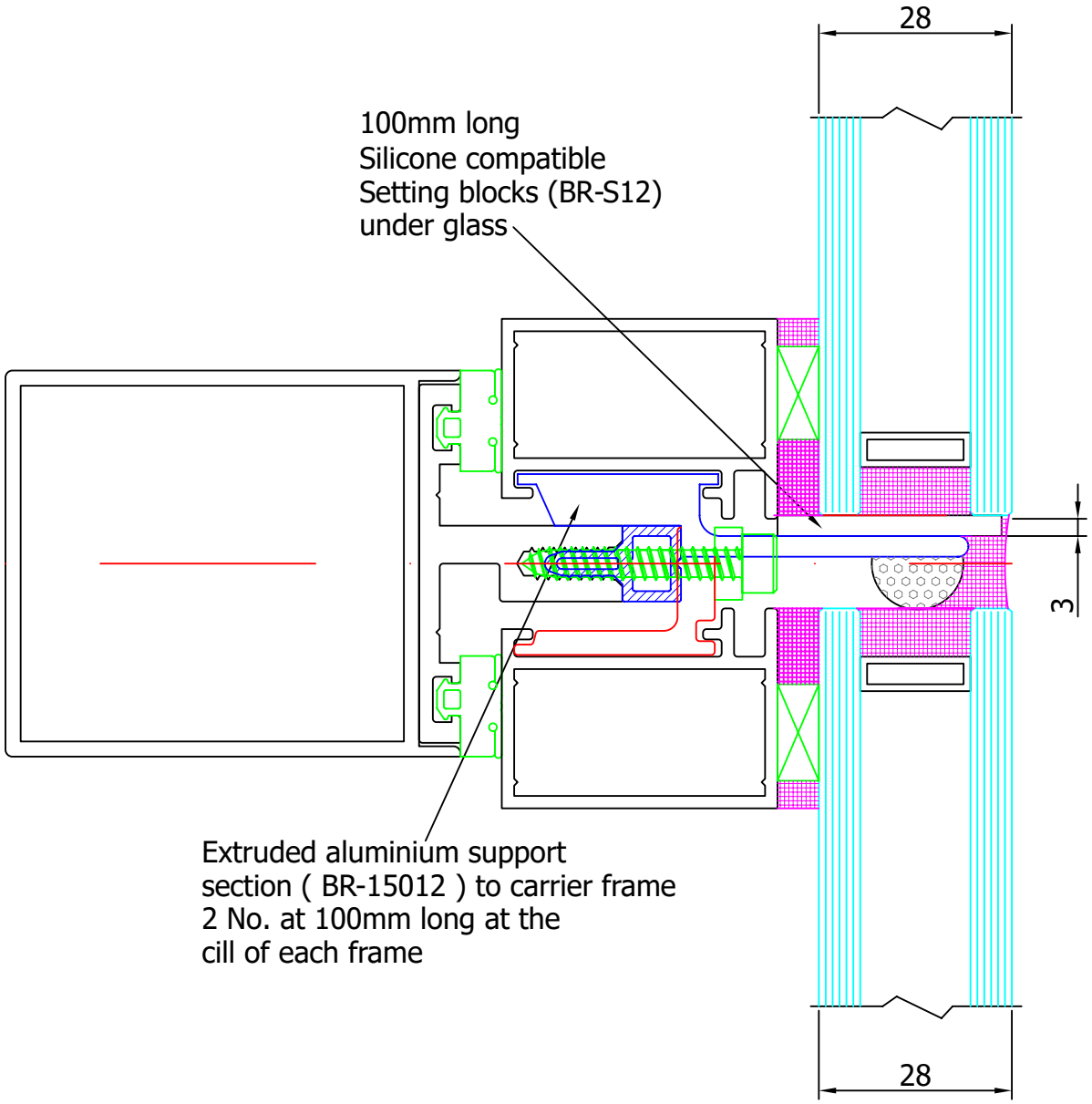

## Section64 - Glazing Fabrication Details

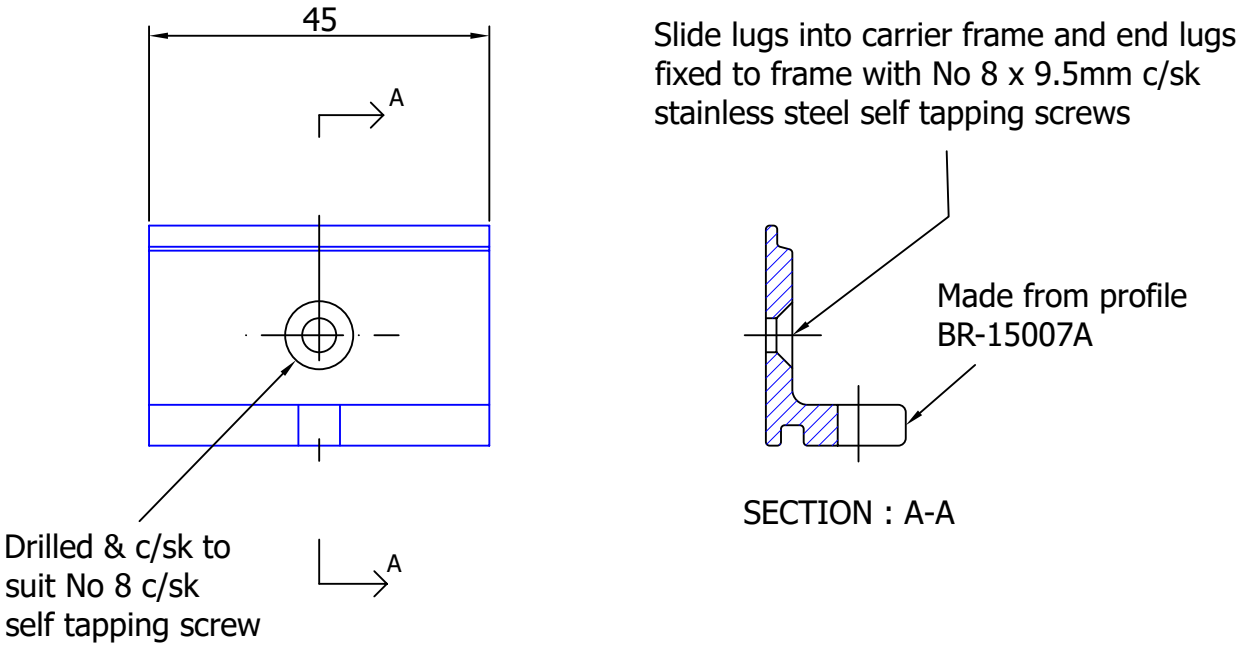


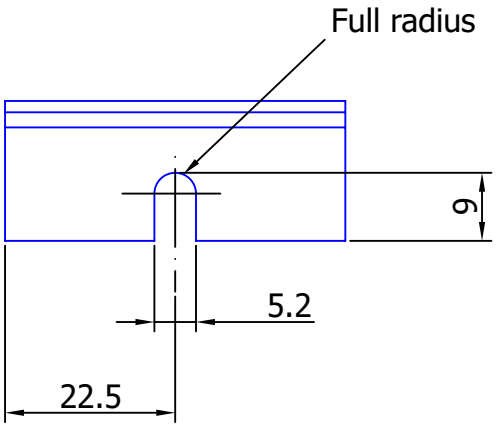

## Section64 - Glazing Fabrication Details

Secure double glazed units using glazing fixing lugs BR-15007A see page 64/28. Position lugs shown below. Torque lug fixing screws equally and evenly to 3.5Nm and ensure adequate compression on internal mullion and transom gaskets.

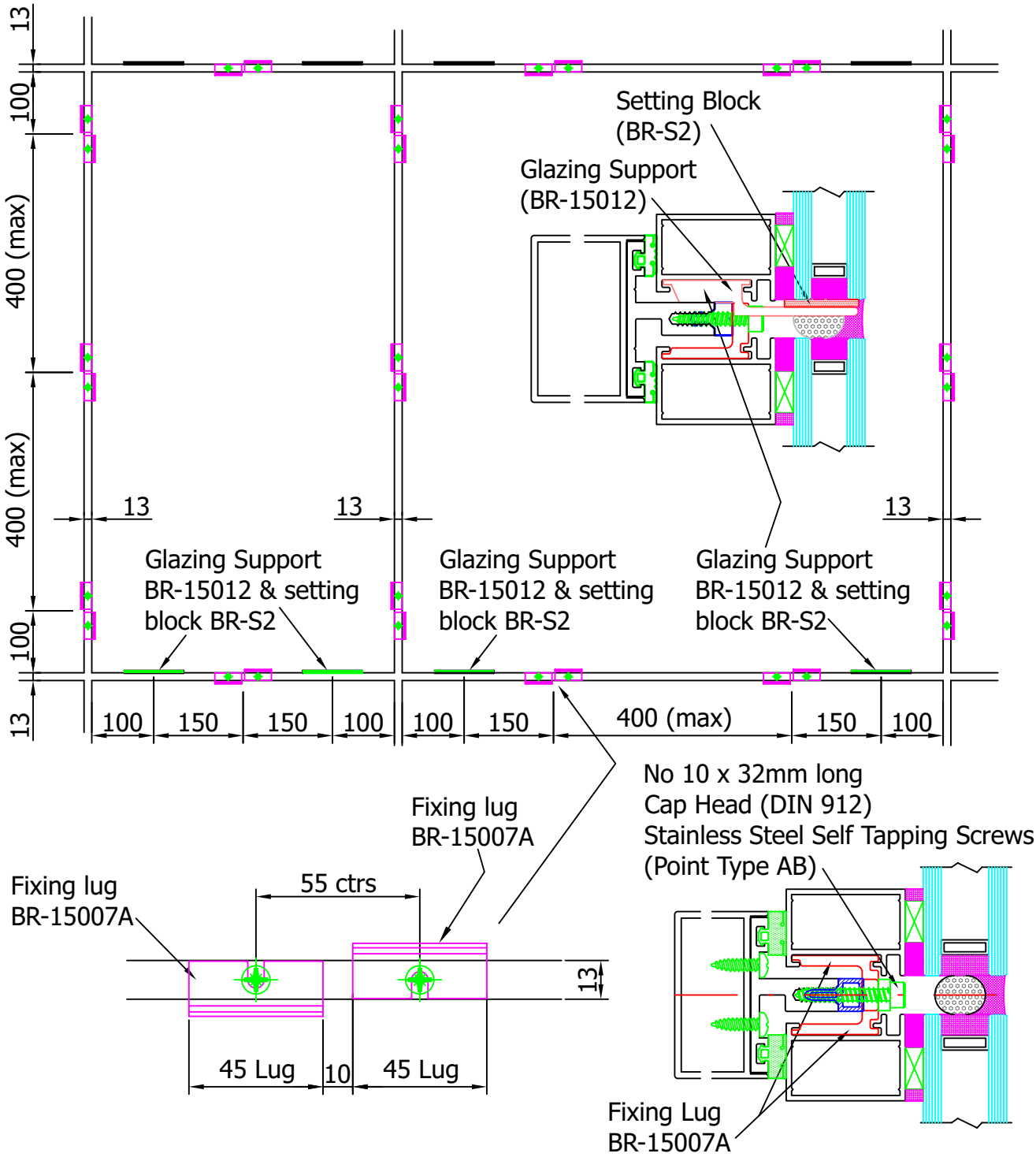

BRITAL
ALUMINIUM FACADE DESIGNS

# Fabrication and Installation Details

# CW - 56

## Section70 - Fabrication & Assembly

The following instructions give general guidance to enable assembly of the Brital Four Sided Fully Capped Curtain Walling System.

### Mullion Transom Assembly

This system is erected as a 'Stick System' as follows :

1. Cut and prepare the curtain walling components as described in section 50 of this document.

2. Install mullions ( complete with Thermal Break BR-52) onto the building structure ensuring that they are vertical and plumb and are at the required centres ( + or - 1mm).

3. Fill the mullion gasket groove behind where the transom is to fit with sealant from approved Brital sealant supplier and apply a bead of this sealant to the back of the transom where it over laps the mullion edge.

4. Offer the transom ( complete with Thermal Break BR-48 ) into position and secure to the face of the mullion using No. 8 x 16mm stainless steel self tapping screws in the holes provided - check that the transom has been installed horizontal, check that diagonals accross the openings are within 3mm of each other.

5. Seal between ends of the transom and mullion with the same sealant.

6. Fit the intended transom backs via the holes in the transom section ensuring the heads of the screws are all well sealed.
   Single glaze adaptors also to be fitted to mullions where required, all screw heads and access holes are to be sealed.

7. Fit the large mullion gasket BR-53, the small transom gasket BR-54 ensuring the joints are sealed.

8. Offer the glass/vent/spandrel panel into the curtain walling grid ensuring it is correctly positioned on the setting blocks.

9. Screw fix the pressure plates to the mullions and transoms and seal the joints between them.

10. Fit the clip caps onto the pressure plates ensuring that the clearance at each end of the transom caps are equal.

11. Check the operation of the opening vent and adjust as necessary.

## Section70 - Fabrication & Assembly

The following instructions give general guidance to enable assembly of the Brital 4 Sided Frameless Structural Glazed Curtain Walling System.

Mullion & Transom Assembly

This system is erected as a "Stick System" as follows:

1. Cut and prepare the curtain walling components as described in section 50 of this document.

2. Install mullions ( complete with Thermal Break BR-02 ) onto the building structure ensuring that they are vertical and plumb and are at the required centres ( + or - 1mm ).

3. Fill the mullion gasket groove behind where the transom is to fit with sealant from approved Brital sealant supplier and apply a bead of this sealant to the back of the transom where it over laps the mullion edge.

4. Offer the transom into position and secure to the face of the mullion using No. 8 x 16mm stainless steel self tapping screws in the holes provided - check that the transom has been installed horizontal, check the diagonal across the openings are within 3mm of each other. Fit Thermal Break where applicable.

5. Seal between ends of the transom and mullion with the same sealant.

6. Fit the intended transom backs via the holes in the transom section ensuring the heads of the screws are well sealed.

7. Fit the large mullion gasket BR-53, the small transom gasket BR-54 ensuring the joints are well sealed.

8. Offer the glazed carrier sections into position and secure to the mullion/ transoms with No.10 self tapping screws fixed through the lugs provided ( for fabrication of carrier frames see separate sheet).

9. Check the operation of the opening vents and adjust as necessary.

10. Complete the installation by fitting the closed cell, non-gassing, polyethylene foam backer rod and apply the silicone weather seal across the joints.

The following instructions give general guidance to enable assembly of the Brital Four Sided Structurally Glazed Curtain Walling System.

Mullion & Transom Assembly

This system is erected as a "Stick System" as follows:

1. Cut and prepare the curtain walling components as described in this document.

2. Install mullions onto the building structure ensuring that they are vertical and plumb and are at the required centres ( + or - 1mm ).

3. Fill the mullion gasket groove behind where the transom is to fit with sealant from approved Brital sealant supplier and apply a bead of this sealant to the back of the transom where it over laps the mullion edge.

4. Offer the transom into position and secure to the face of the mullion using No. 8 x 16mm stainless steel self tapping screws in the holes provided - check that the transom has been installed horizontal, check the diagonals across the openings are within 3mm of each other.

5. Seal between ends of the transom and mullion with the same sealant.

6. Fit the intended transom backs via the holes in the transom section ensuring the heads of the screws are well sealed.

7. Fit the large mullion gasket BR-04 , the small transom gasket BR-05 and the thermal break section BR-03 ensuring the joints are well sealed.

8. Offer the glazed carrier sections into position and secure to the mullion/ transoms with No.10 self tapping screws fixed through the lugs provided ( for fabrication of carrier frames see separate sheet).

9. Check the operation of the opening vents and adjust as necessary.

10. Complete the installation by fitting the closed cell, non-gassing, polyethylene foam backer rod and apply the silicone weather seal across the joints.

## Section70 - Fabrication & Assembly

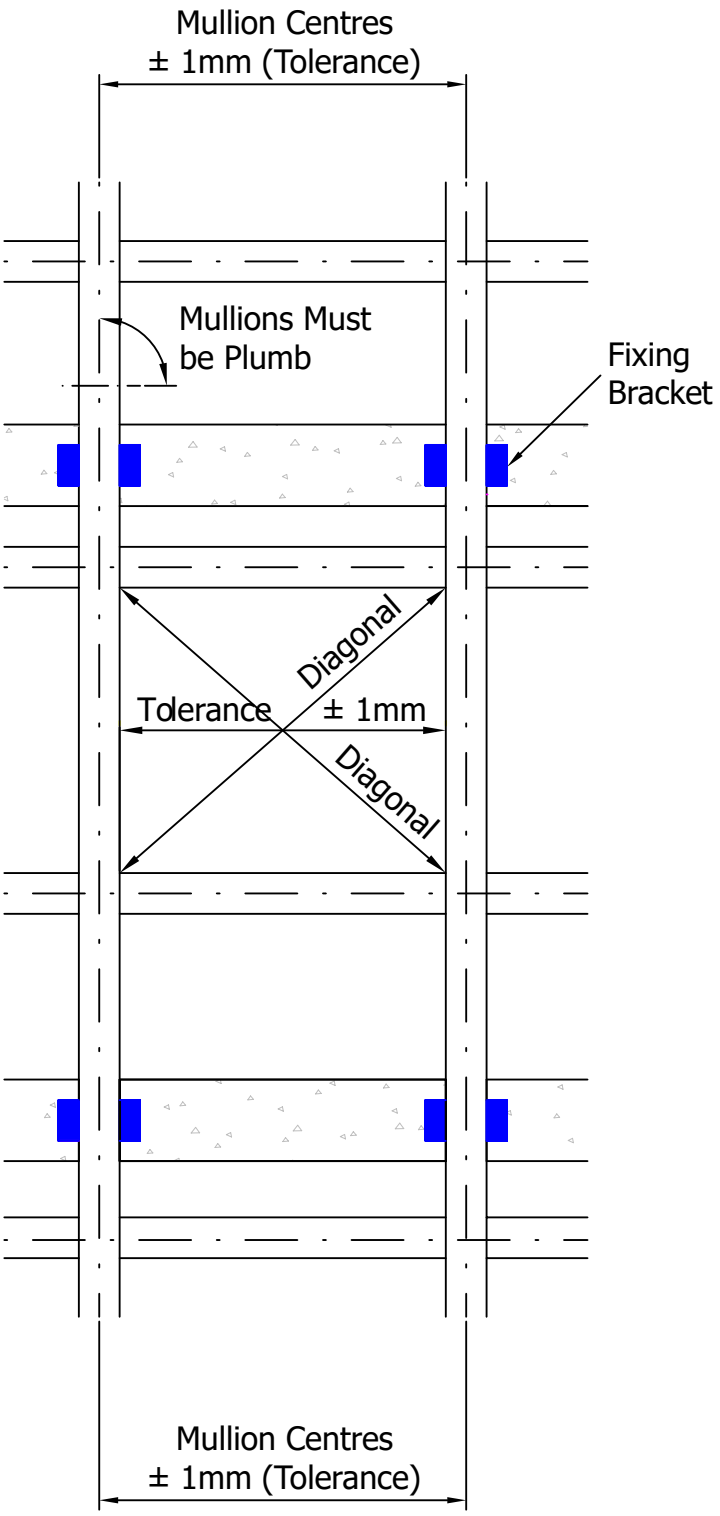

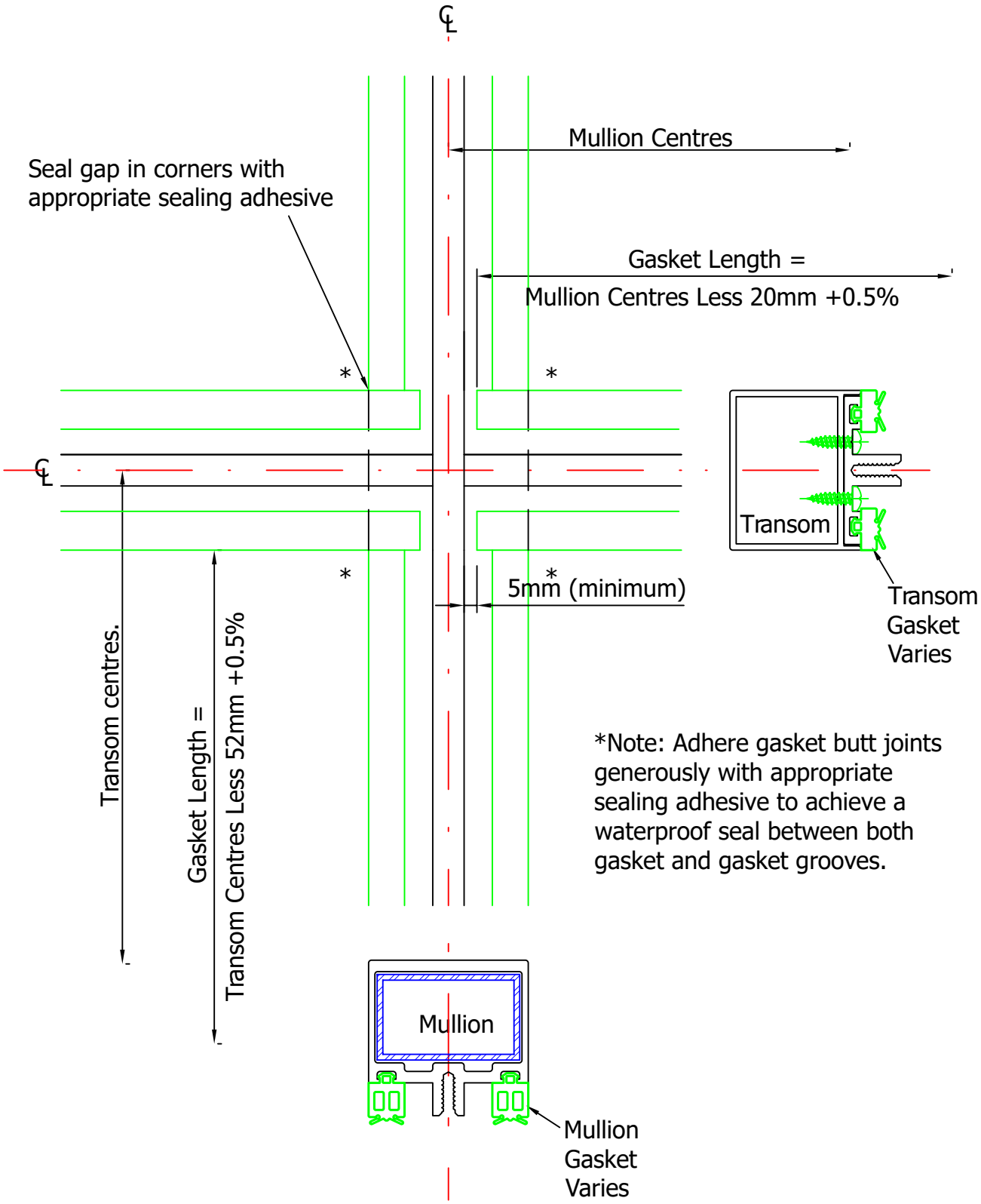
Mullion Centres
Seal gap in corners with appropriate sealing adhesive
Gasket Length =
Mullion Centres Less 20mm +0.5%
*
*
Transom
*
*
5mm (minimum)
Transom Gasket Varies
Transom centres.
Gasket Length =
Transom Centres Less 52mm +0.5%
*Note: Adhere gasket butt joints generously with appropriate sealing adhesive to achieve a waterproof seal between both gasket and gasket grooves.
Mullion
Mullion Gasket Varies

## Section70 - Fabrication & Assembly

Note :- Spigot (BR-15014) required where wind load is greater than 2KN or glass weight is greater than 100Kg (see sheet 70/07). Spigot (BR-15014) MUST always be used for transom back sections BR-TB1, BR-25027, BR-TB2, BR-TB3, BR-TB4 & BR-TB199.

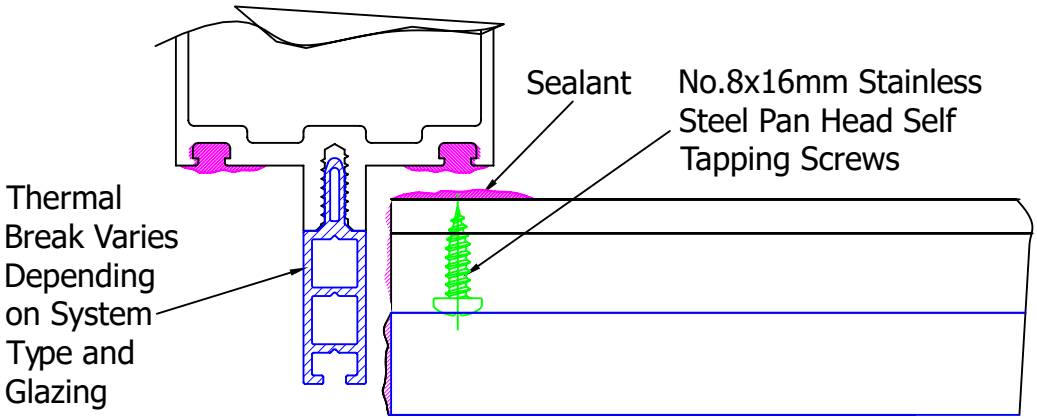


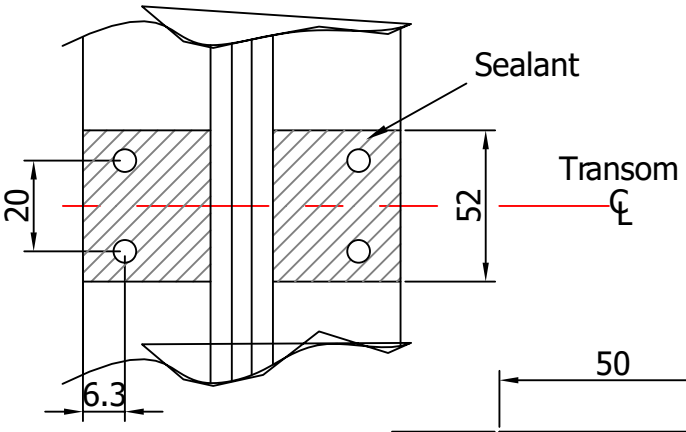


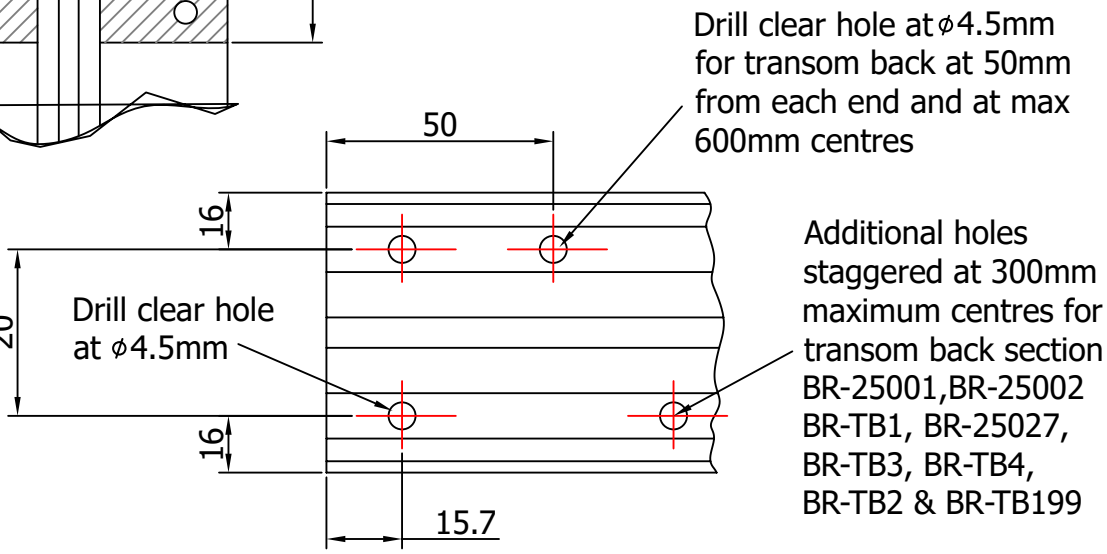


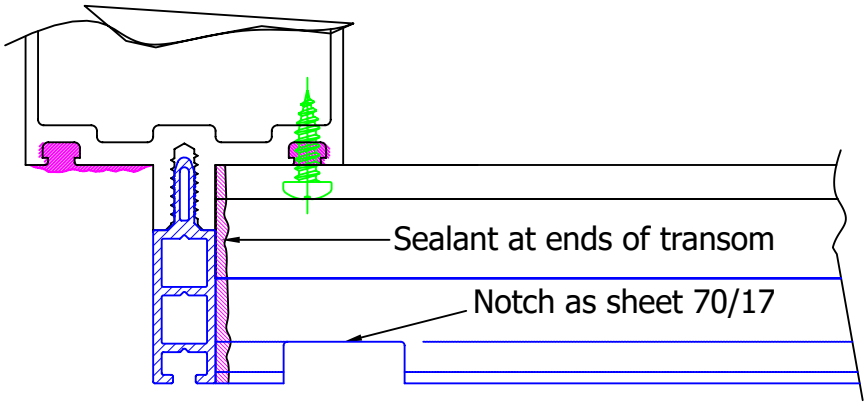

## Section70 - Fabrication & Assembly

Note :- Spigot (BR-15014) required where wind load is greater than 2KN or glass weight is greater than 100Kg. Spigot (BR-15014) MUST always be used for transom back sections BR-TB1, BR-25027, BR-TB2, BR-TB3, BR-TB4 & BR-TB199.

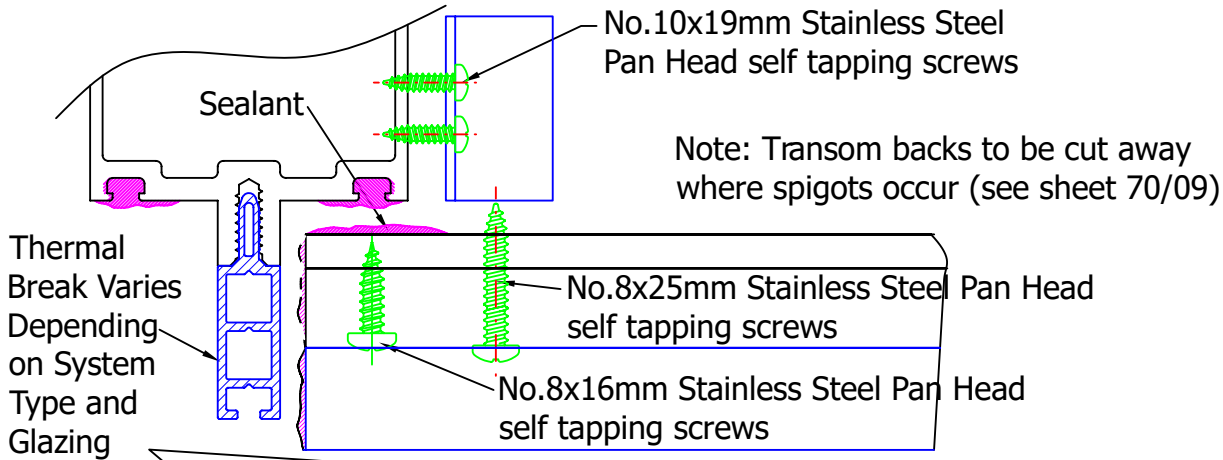


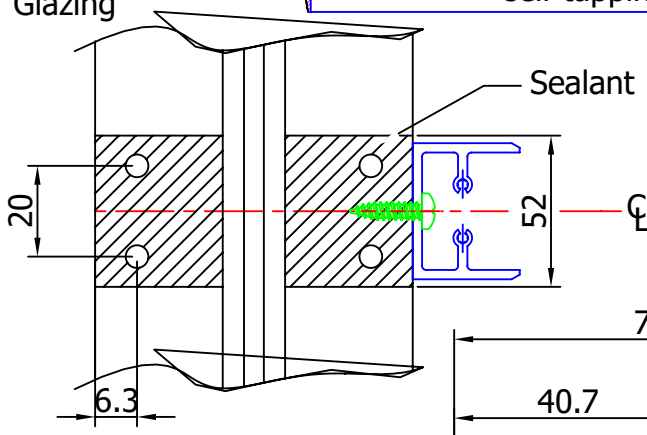


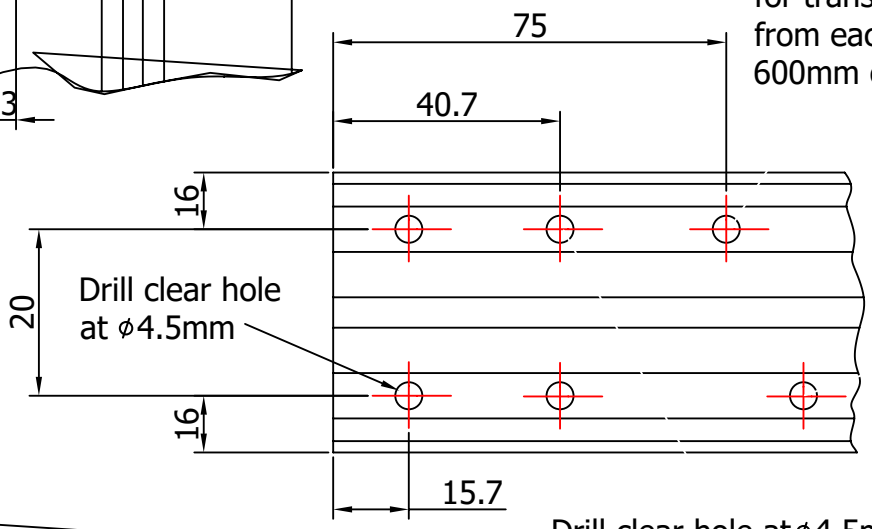


Drill clear hole at ϕ4.5mm for transom back at 75mm from each end and at max 600mm centres

Additional holes staggered at 300mm maximum centres for transom back section BR-25001, BR-25002 BR-TB1, BR-25027, BR-TB3, BR-TB4, BR-TB2 & BR-TB199

Drill clear hole at ϕ4.5mm for transom spigot at 40.7mm from each end of transom bar.

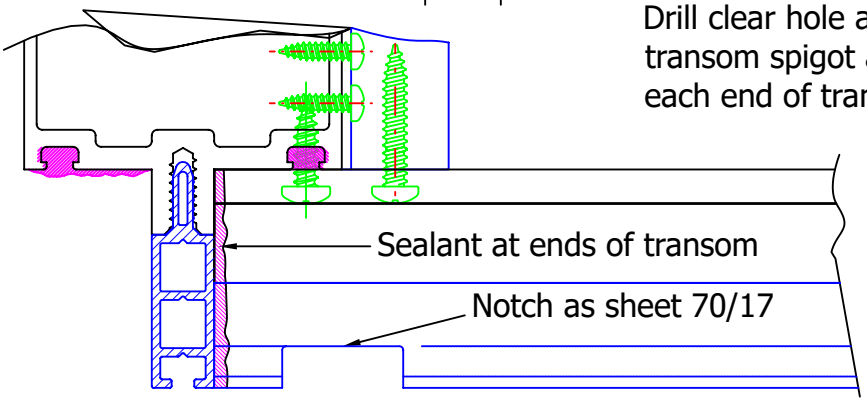

## Section70 - Fabrication & Assembly

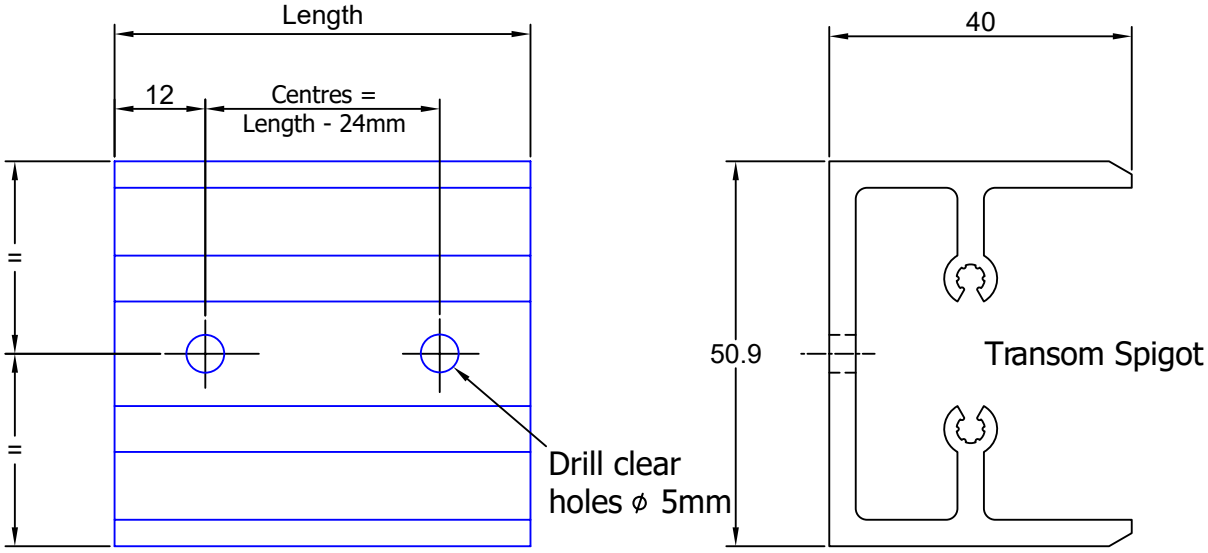


BR-TS1 = Length 37mm ( for Transom Back BR-25002)
BR-TS2 = Length 56mm ( for Transom Back BR-25001)
BR-TS3 = Length 65mm ( for Transom Back BR-15011)
BR-TS4 = Length 76mm ( for Transom Back BR-15004 & BR-TB1)
BR-TS5 = Length 98mm ( for Transom Back BR-15010 & BR-25027)
BR-TS13 = Length 160mm ( for Transom Back BR-TB2 & BR-TB80)
BR-TS14 = Length 108mm ( for Transom Back BR-TB3)
BR-TS15 = Length 130mm ( for Transom Back BR-TB4)
BR-TS16 = Length 195mm ( for Transom Back BR-TB199)

Cut from section BR-15014

For details of cut away to Transom backs where spigots occur see sheet 70/09

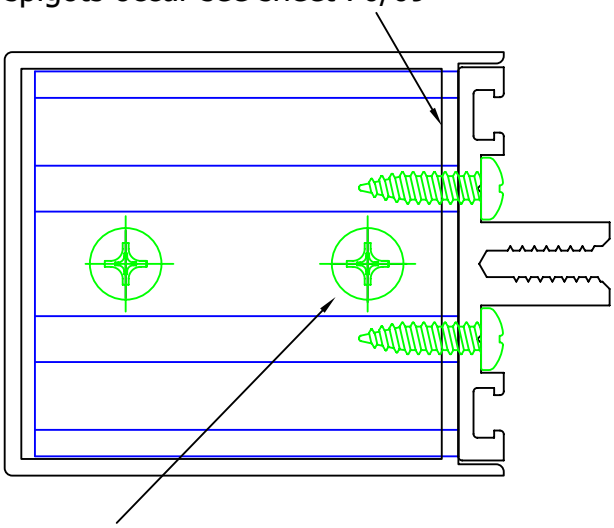

For details of Additional Transom spigot fixings see sheet 70/07

## Section70 - Fabrication & Assembly

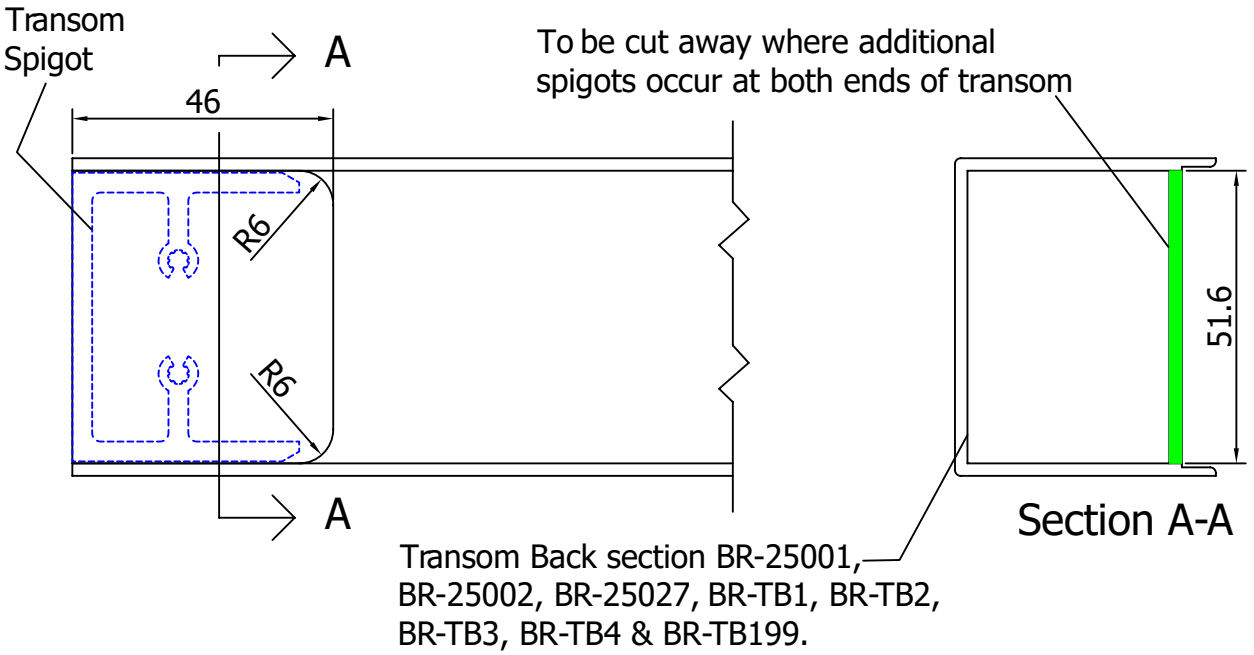


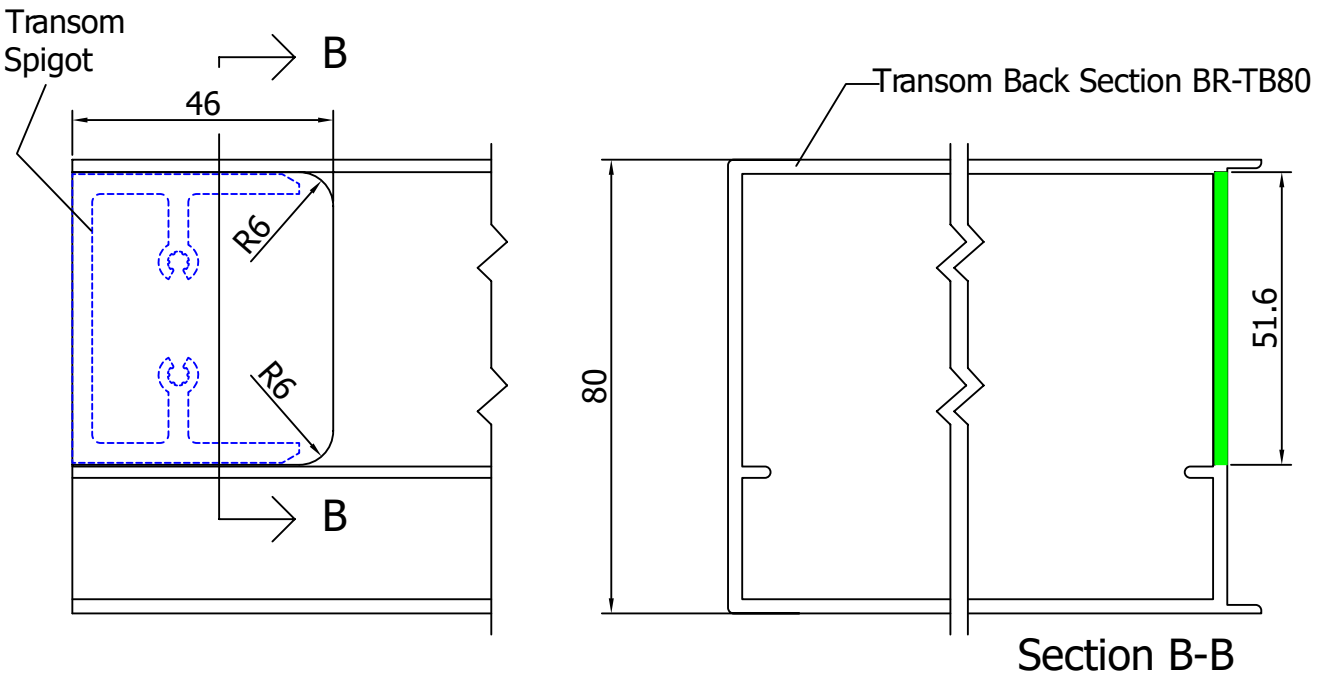

## Section70 - Fabrication & Assembly

Note :- Spigot (BR-15014) MUST always be used for transom back sections BR-TB1, BR-25027, BR-TB2, BR-25001, BR-25002, BR-TB3, BR-TB4, and BR-TB199.

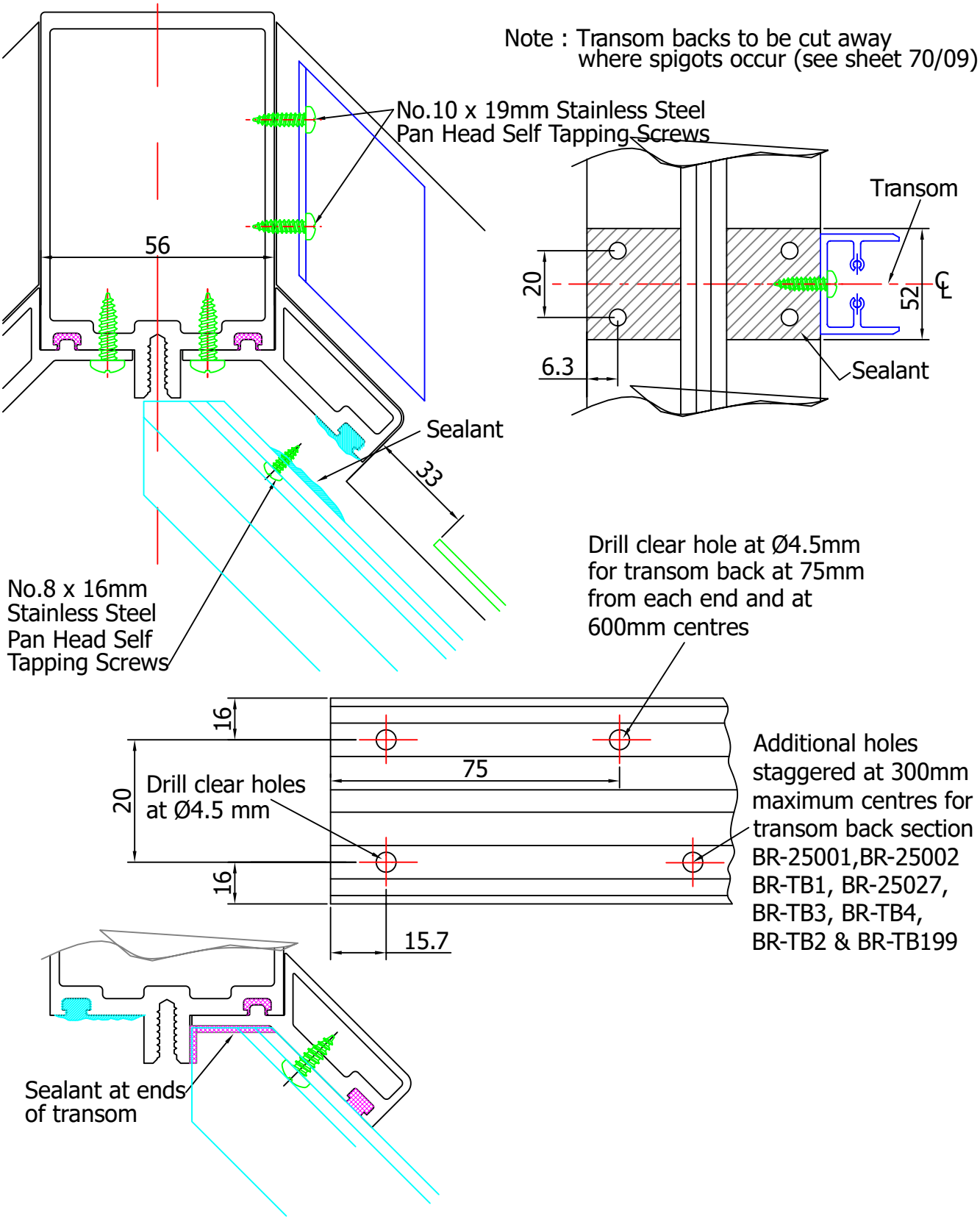

## Section70 - Fabrication & Assembly

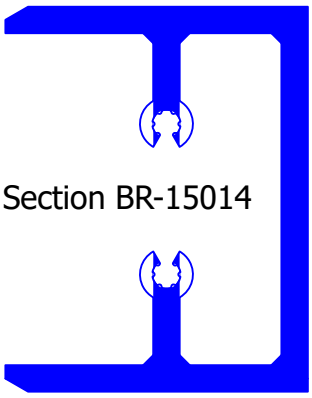

Section BR-15014

Special end cleats cut at facet angle

This detail is only suitable for use with vertical silicone joints and horizontal capped system (VFF)

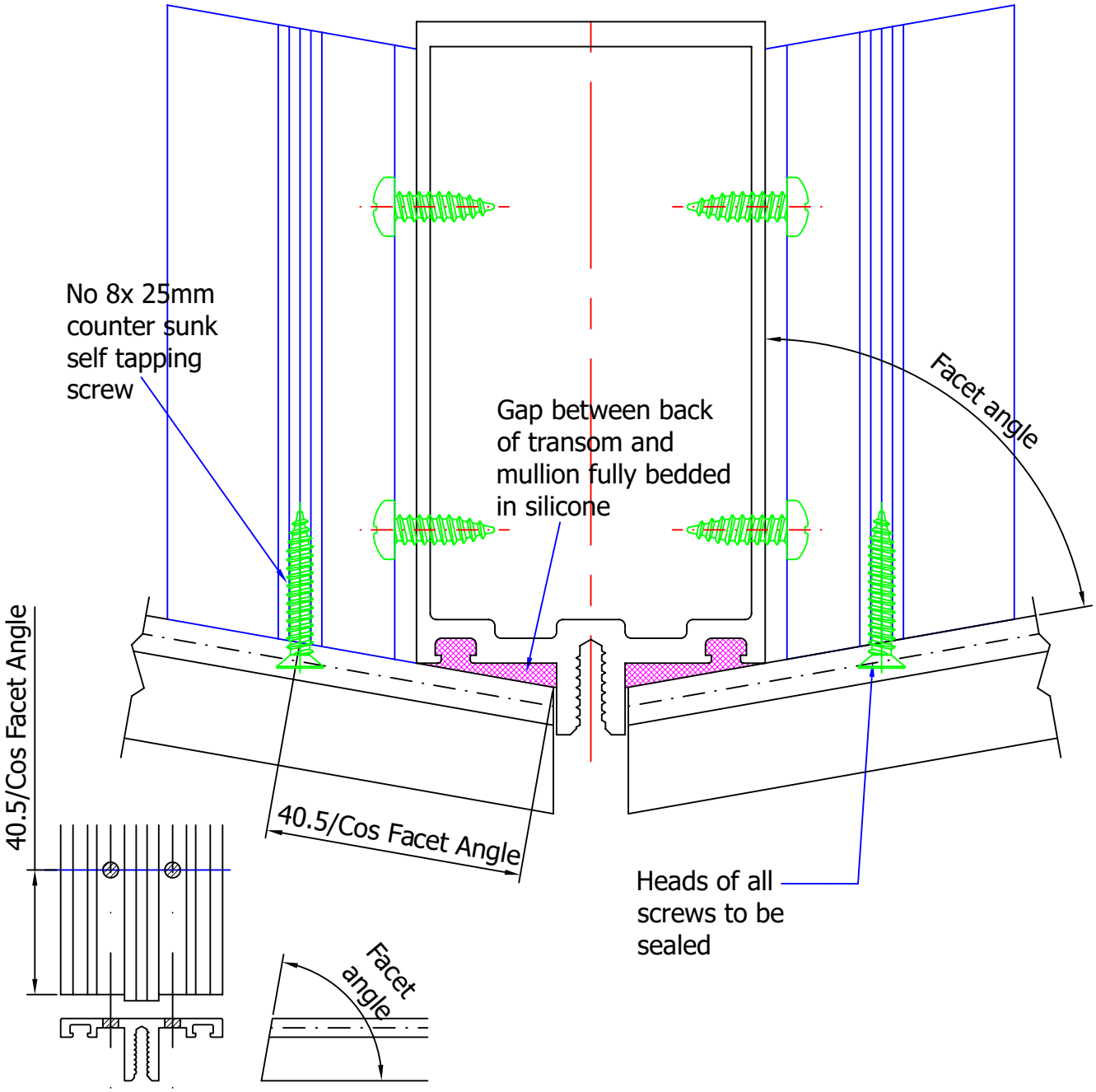

## Section70 - Fabrication & Assembly

| ANGLE | OFFSET |
|---|---|
| 00 | |
| 5 | 2.2 |
| 10 | 4.2 |
| 15 | 6.3 |
| 20 | 8.5 |
| 25 | 10.9 |
| 30 | 13.5 |
| 35 | 16.2 |
| 40 | 19.5 |
| 45 | 23.1 |

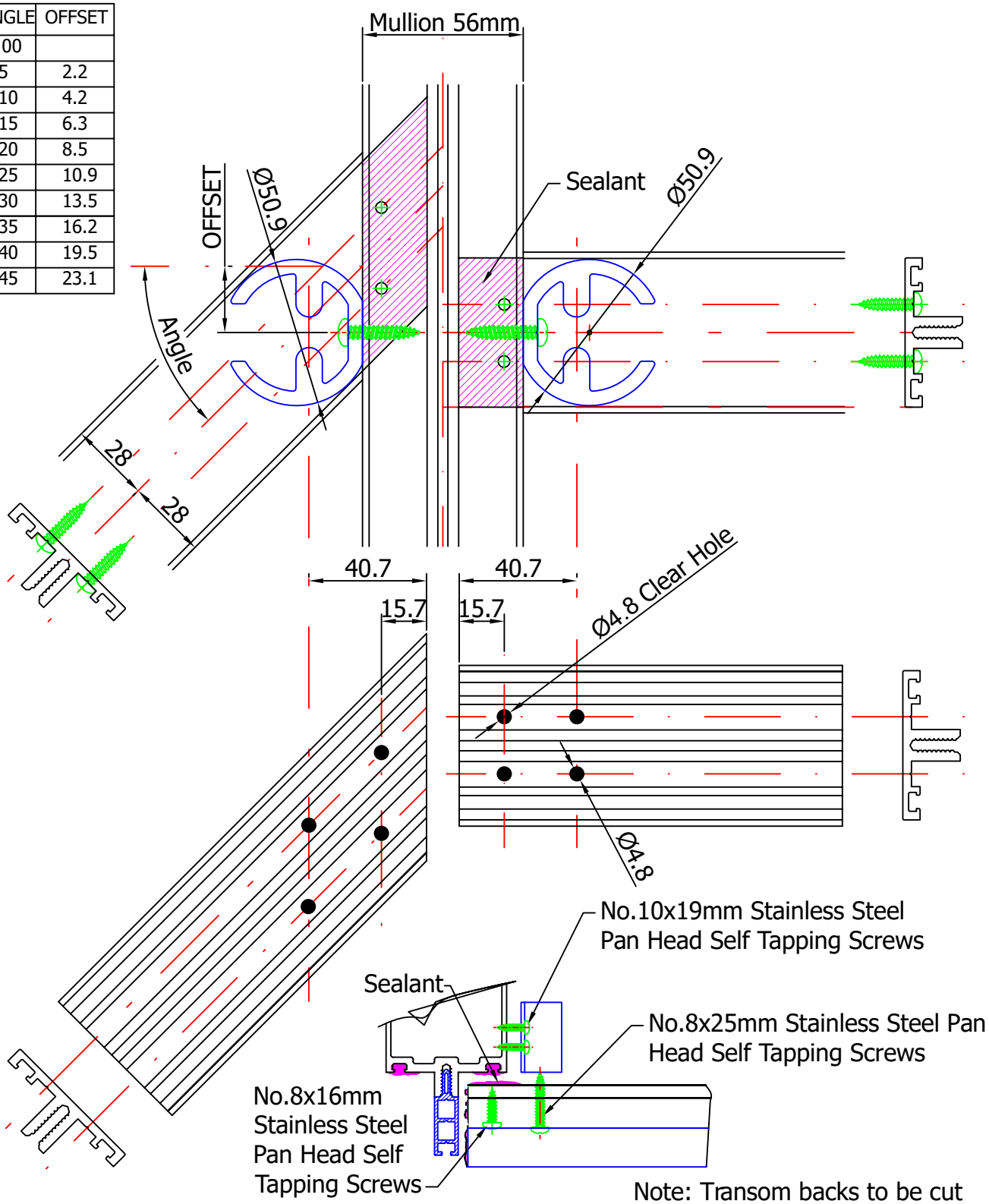


Note: Transom backs to be cut away where spigots occur (see sheet 70/14)

Note :- Additional spigot required where wind load is greater than 2KN or glass weight is greater than 100Kg. Spigots MUST always be used for transom back sections BR-TB1 & BR-25027, BR-TB2, BR-TB3, BR-TB4 & R-TB199.

## Section70 - Fabrication & Assembly

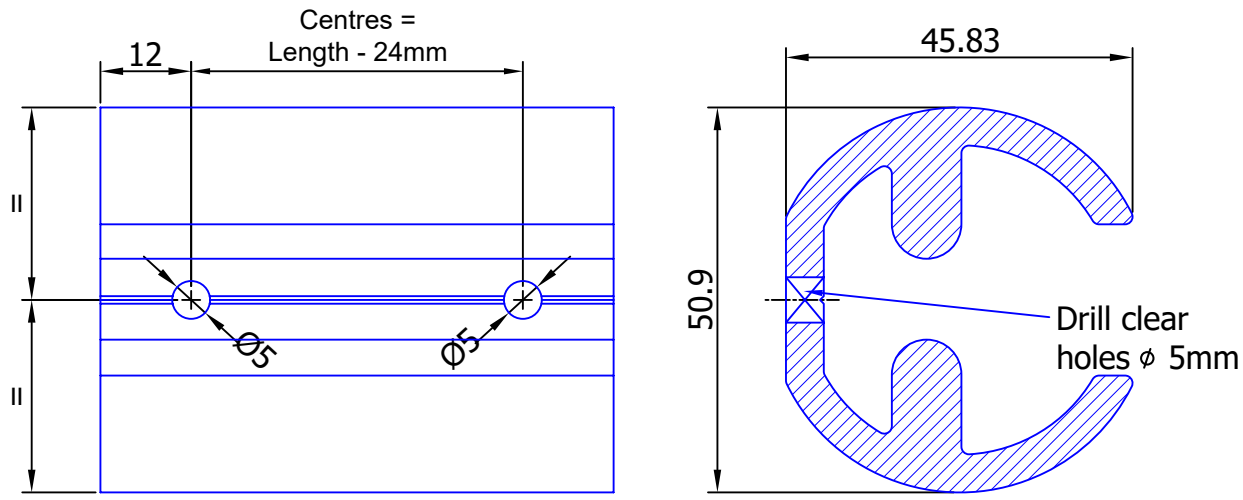


Transom "C" Spigot

BR-TS17 = Length 37mm ( for Transom Back BR-25002)
BR-TS18 = Length 56mm ( for Transom Back BR-25001)
BR-TS19 = Length 65mm ( for Transom Back BR-15011)
BR-TS20 = Length 76mm ( for Transom Back BR-15004 & BR-TB1)
BR-TS21 = Length 98mm ( for Transom Back BR-15010 & BR-25027)
BR-TS22 = Length 108mm ( for Transom Back BR-TB3)
BR-TS23 = Length 130mm ( for Transom Back BR-TB4)
BR-TS24 = Length 160mm ( for Transom Back BR-TB2 & BR-TB80)
BR-TS25 = Length 195mm ( for Transom Back BR-TB199)

Cut from section BR-CC1

For details of cut away to Transom backs where "C" spigots occur see sheet 70/14

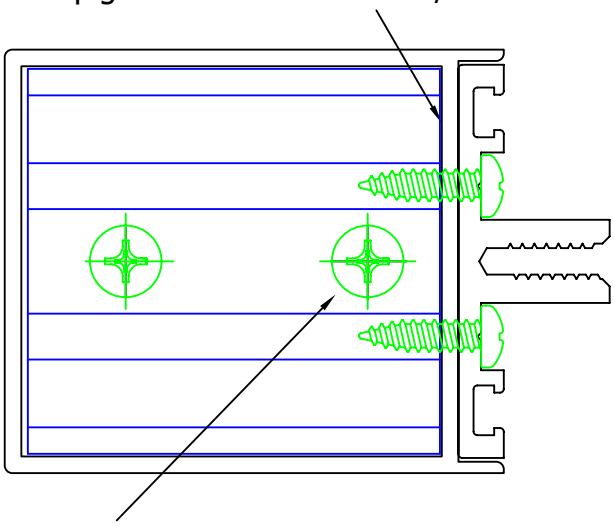

For details of Additional Transom "C" spigot fixings see sheet 70/15

## Section70 - Fabrication & Assembly

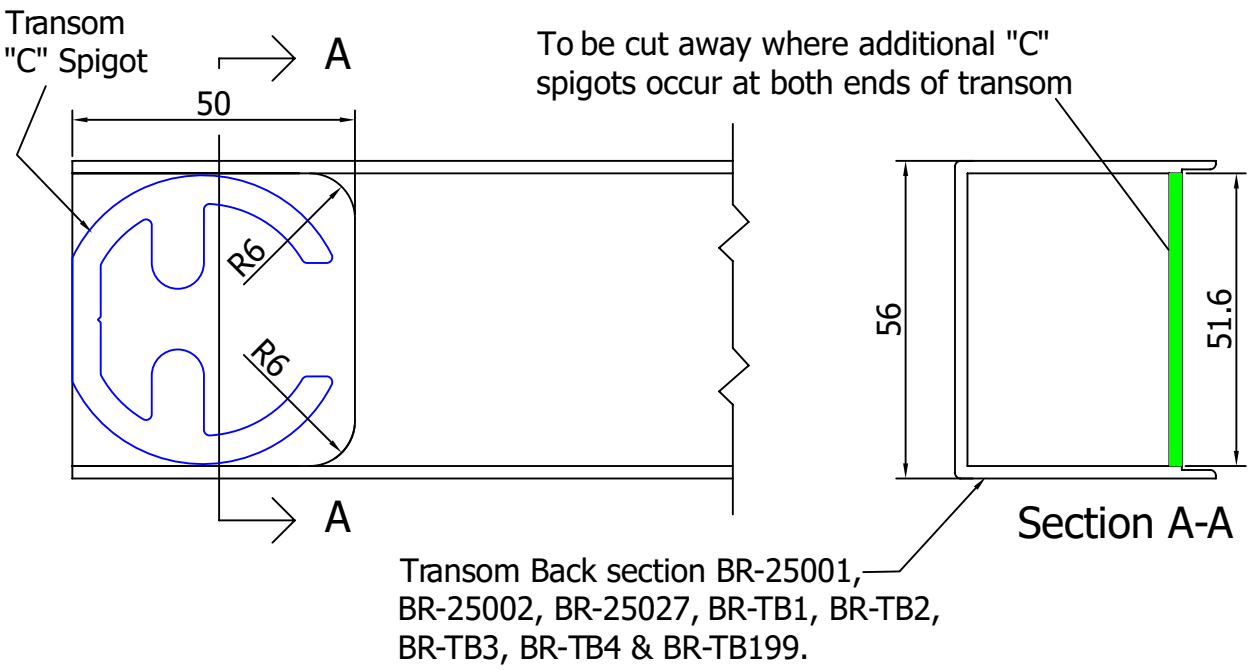


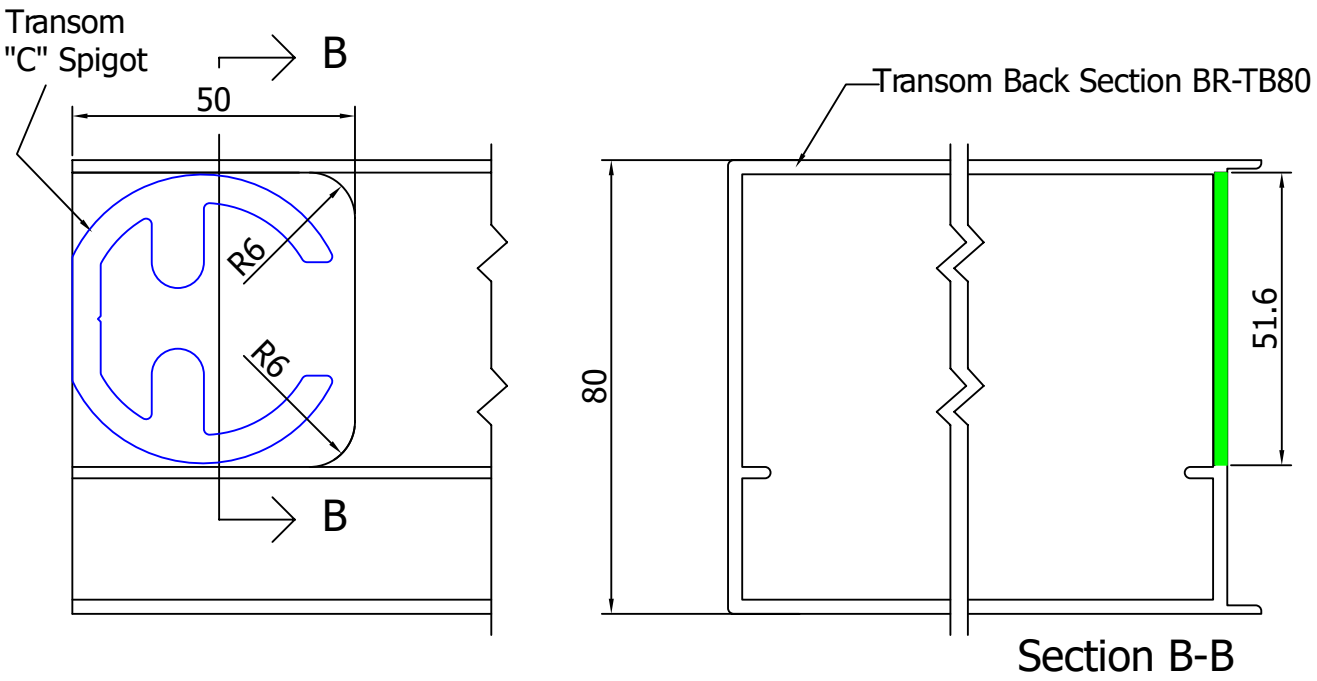

Note : Spigots MUST always be used for transom back sections BR-T80.

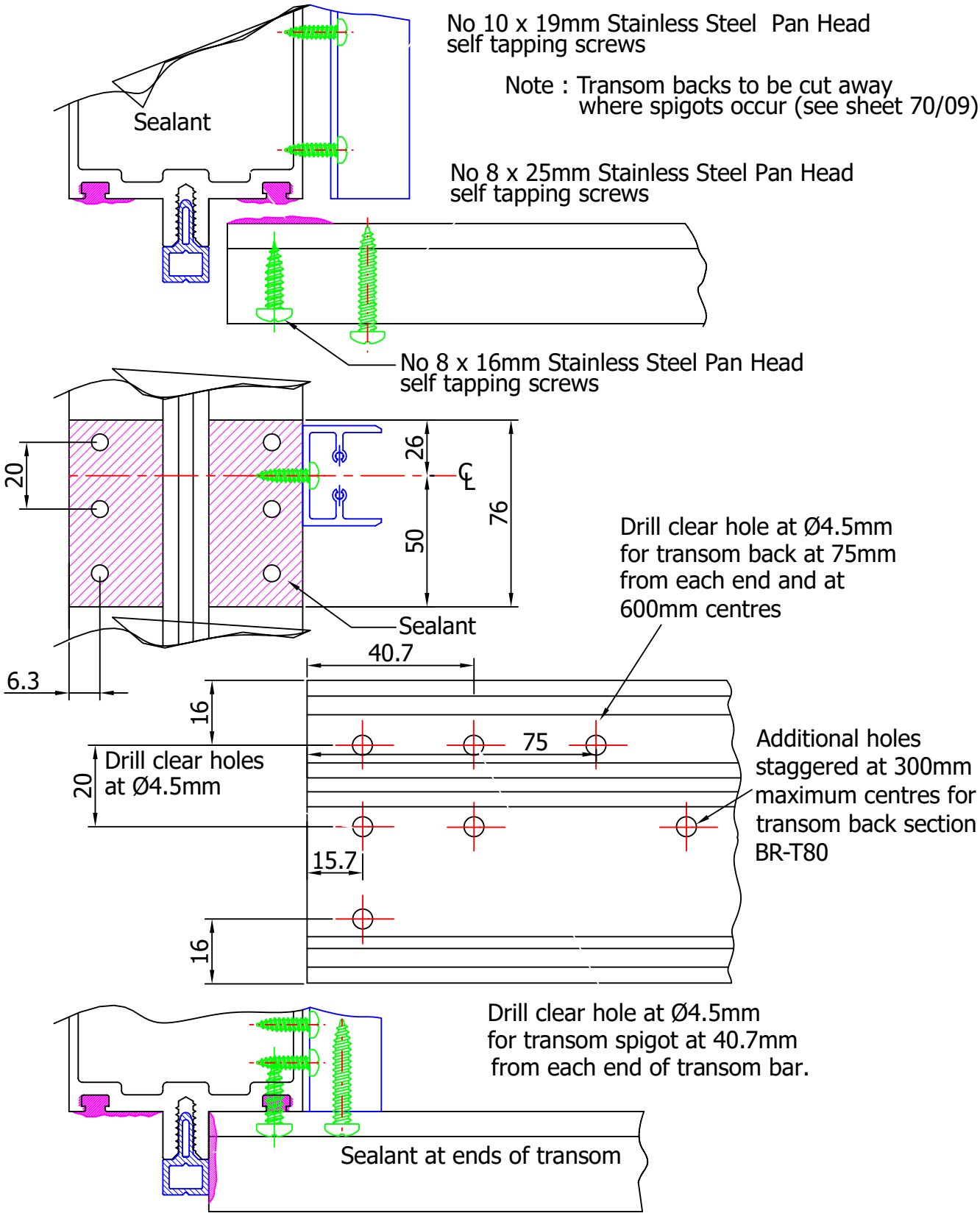

## Section70 - Fabrication & Assembly

Note :- Transom Spigots MUST always be used for transom back section BR-TB80.

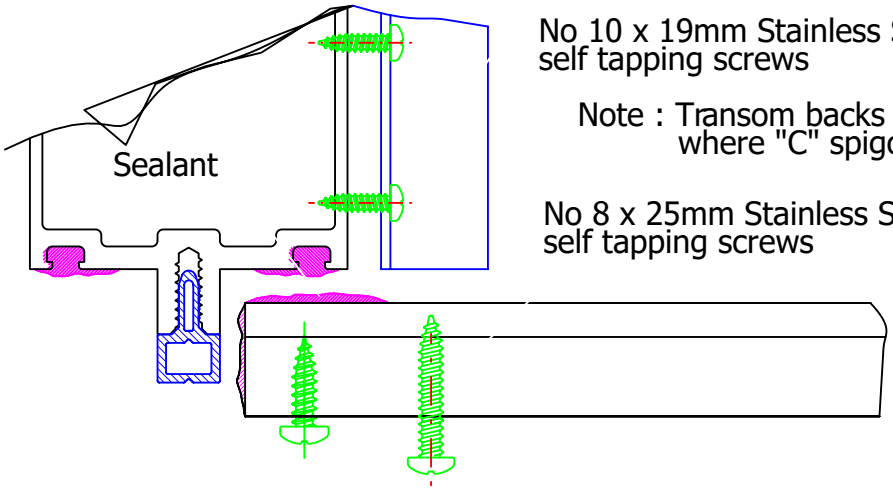


No 10 x 19mm Stainless Steel Pan Head self tapping screws

Note : Transom backs to be cut away where "C" spigots occur (see sheet 70/14)

No 8 x 25mm Stainless Steel Pan Head self tapping screws

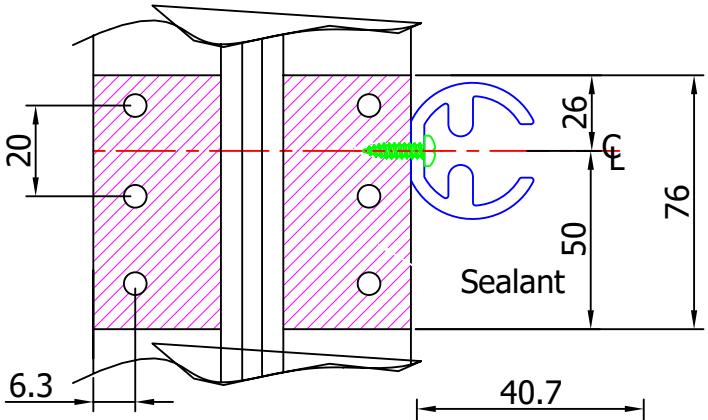


No 8 x 16mm Stainless Steel Pan Head self tapping screws

Drill clear hole at ϕ4.5mm for transom back at 75mm from each end and at 600mm centres

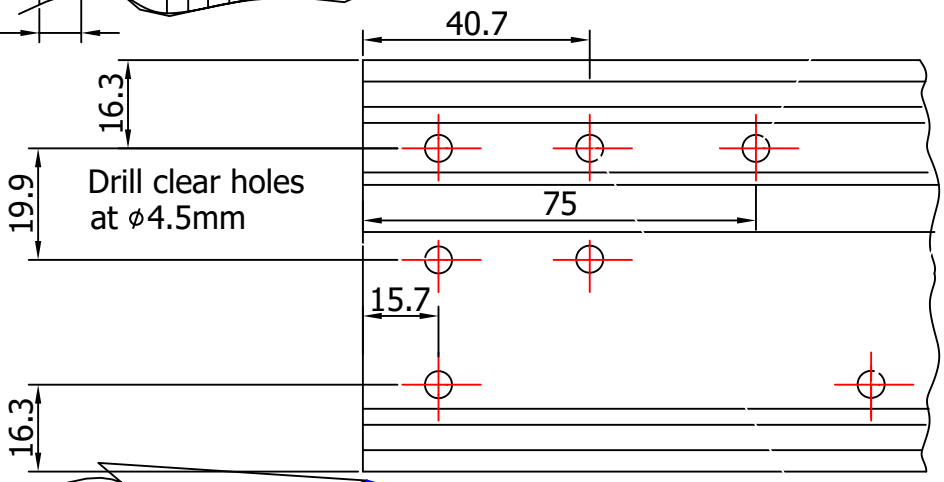


Additional holes staggered at 300mm maximum centres for transom back section BR-TB80

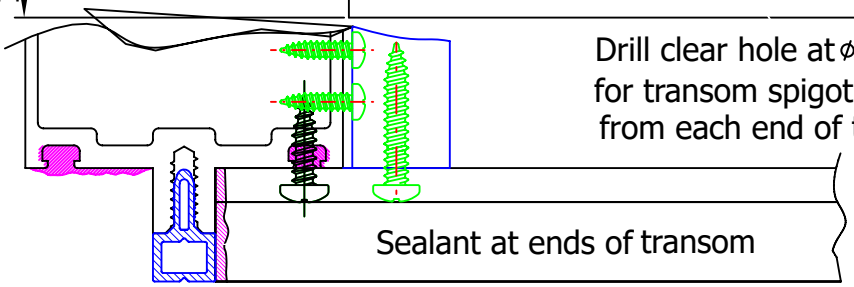


Drill clear hole at ϕ4.5mm for transom spigot at 40.7mm from each end of transom bar.

## Section70 - Fabrication & Assembly

These preparations only applies to 4 sided capped curtain walling system CG-4-56 with Insulated Glazing Units(where single glazing is used mullion pressure plate gaskets should be omitted where they meet the thermal isolator profiles).

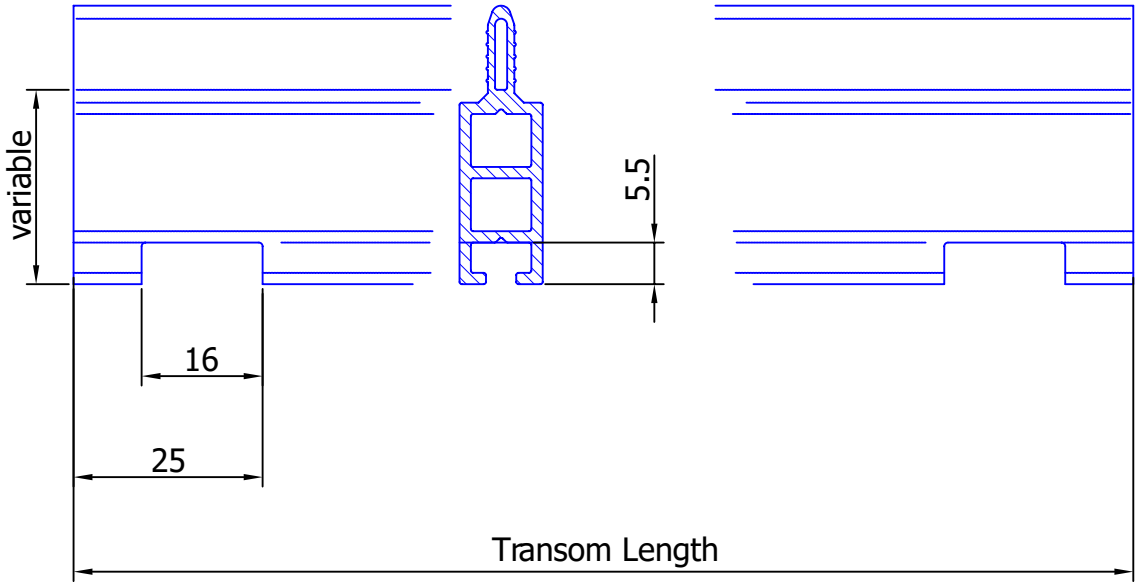


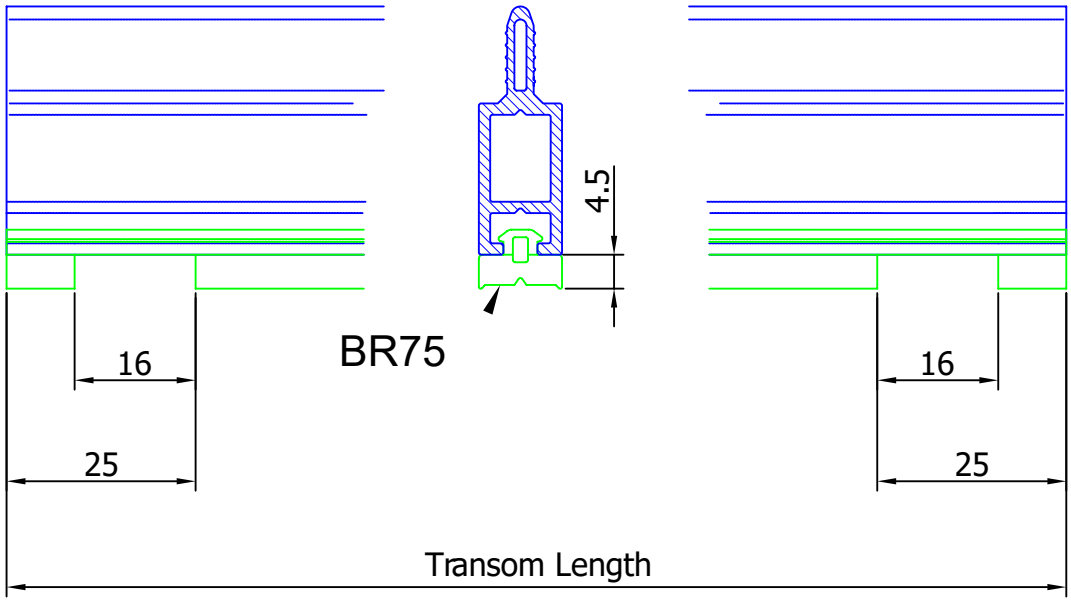


Refer to Sheet 60/1 specific application to suit chosen glazing thickness

## Section70 - Fabrication & Assembly

These preparations only applies to 4 sided capped curtain walling system CG-4-56 with Insulated Glazing Units(where single glazing is used mullion pressure plate gaskets should be omitted where they meet the thermal isolator profiles).

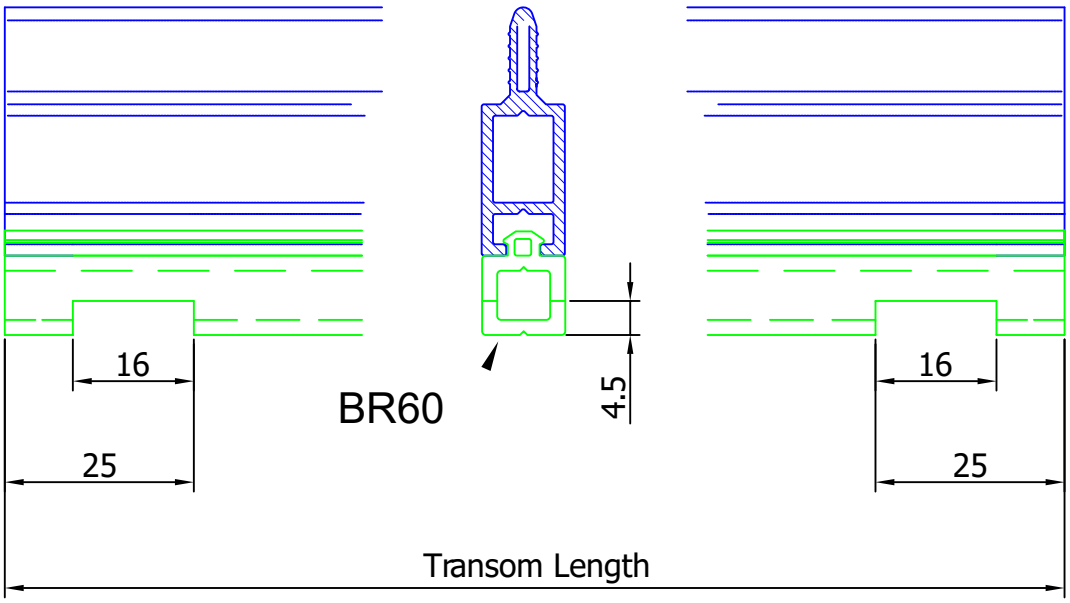

## Fabrication & Assembly Framless Opening Shutters

1. Cut and prepare all of the components as described in this

2. Slide the gasket seal BR - 07 into all the vent frame members allowing them to hang out of the section by 25mm either end. Allow the gasket seal to shrink back for 12 hours before trimming (gasket seal should be trimmed at 45 degrees to allow it to be sealed at the corners after fabrication).

3. Apply sealant around the corner cleats (and corner braces) and insert them into the ends of the the sash & frame members.

4. Apply sealant around the ends of the vent & outer frame members and push the joints together then crimp the joints together using a purpose set crimping machine.

5. Cut away frame at opposite corners to give access to PVCu Spacers. Slide into position and secure with No.8 x 16mm countersunk self tapping screws.

6. Cut weatherseal BR - 01 to length ( as detailed on sheet 71/07 ) and push fit into grooves of outer frame. Glue all corners and joints with appropriate adhesive.

7. Fit the make up tubes if applicable to head & cill sections with stainless steel c/sk head pop rivets. Ensure that tubes are sealed at each end and along their length.

8. Clean any excess sealant off the surface of the frames using appropriate cleaning solution.

9. Glaze the vent frame as described in the section on glazing.

10. Offer the assembled glazed vent & outer frame and fix as previously described in the mullion/transom assembly section.

## Fabrication & Assembly Framless Opening Shutters

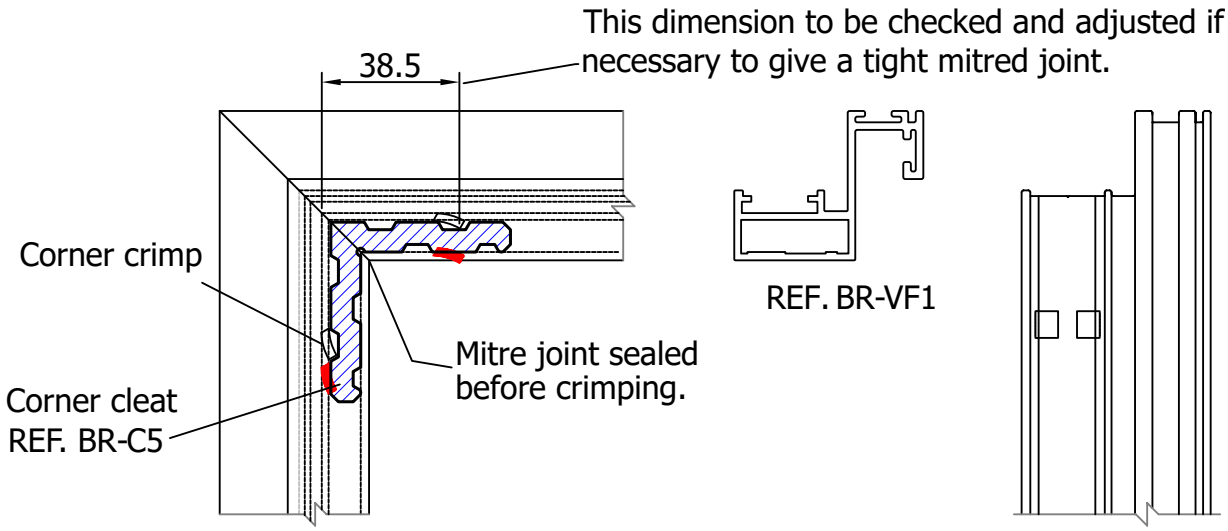


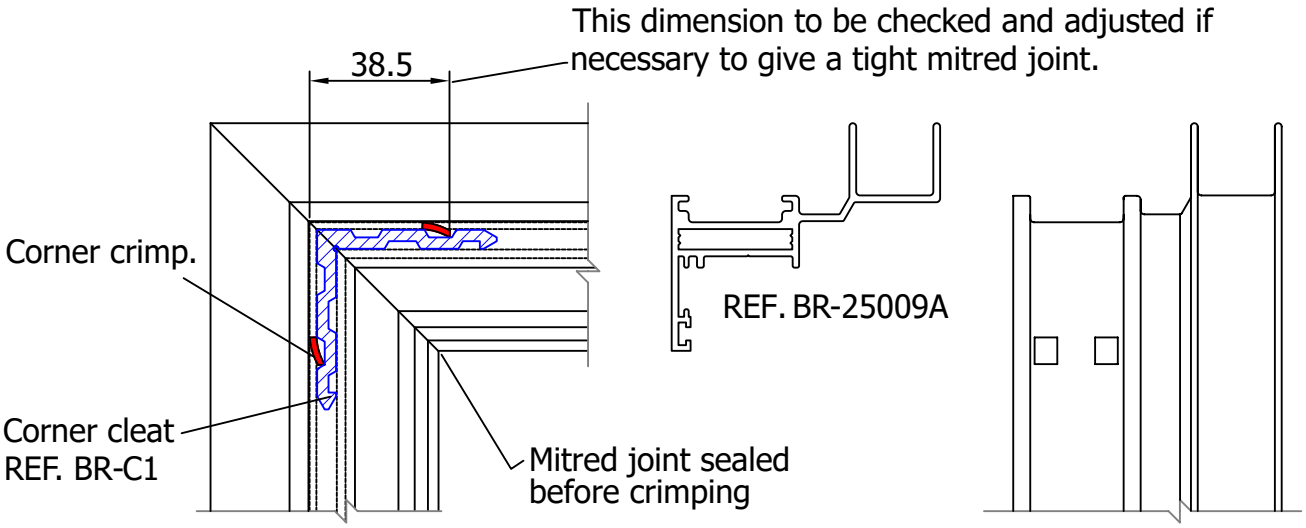


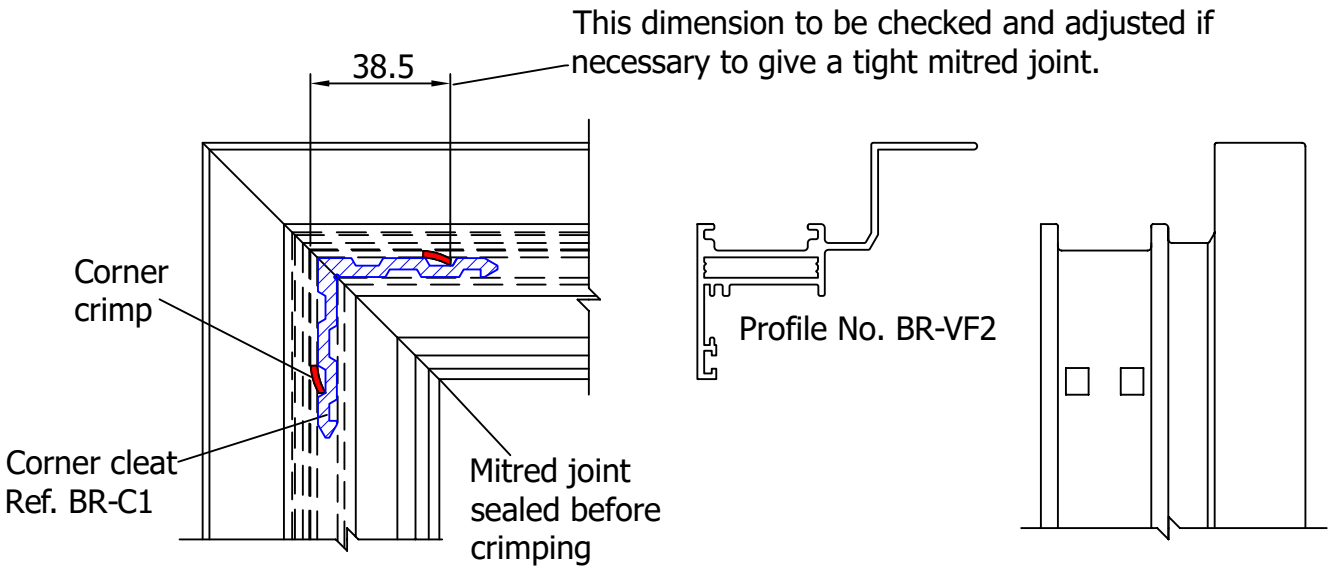

# Fabrication & Assembly Framless Opening Shutters

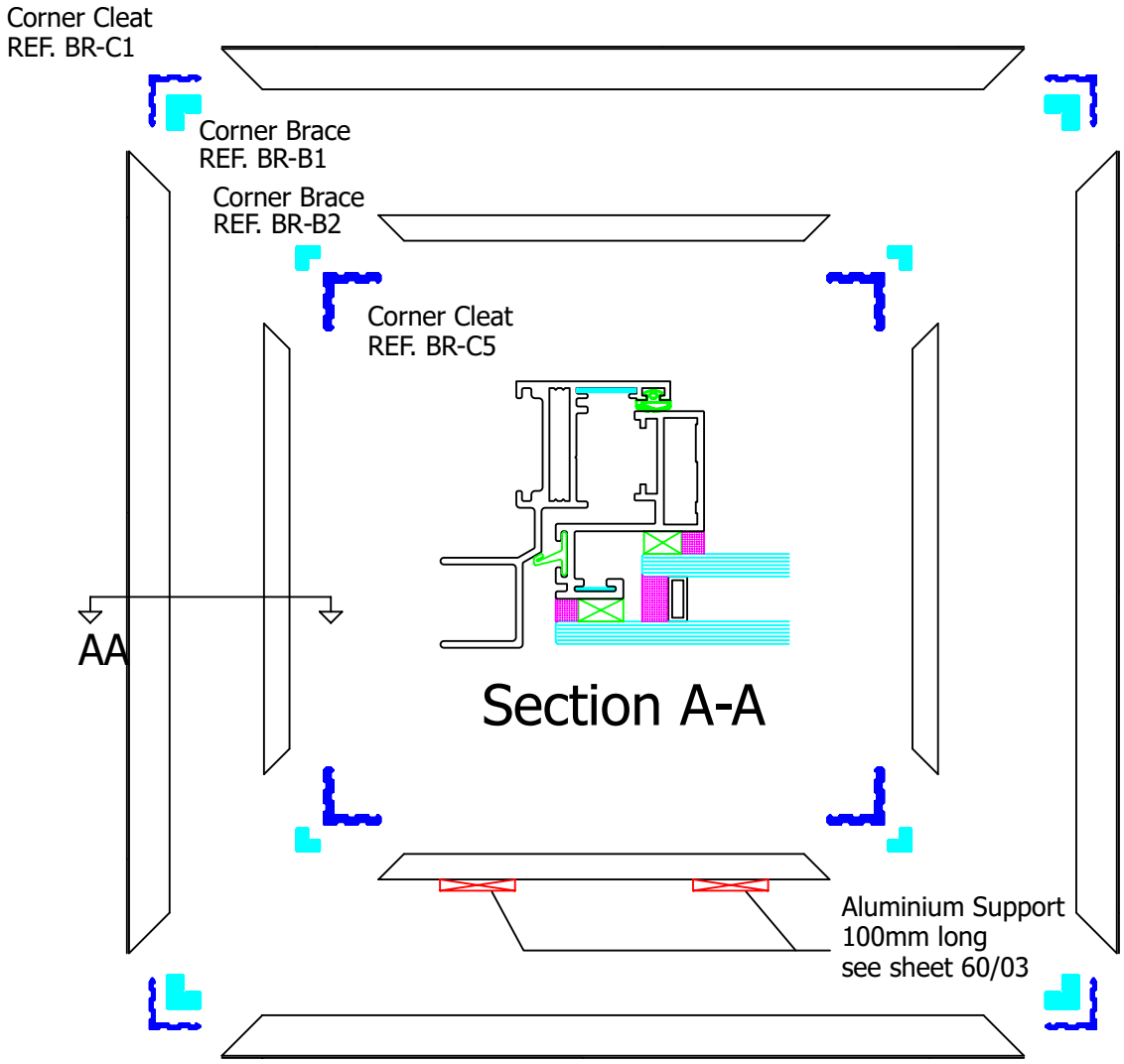


Outer frame height bar = transom centres - 18mm (End cut 45°)

Outer frame width bar = mullion centres - 18mm ( End cut 45° )

Vent frame height bar = transom centres - 79mm ( End cut 45° )

Vent frame width bar = mullion centres - 79mm ( End cut 45° )

Glass size = mullion/transom centres - less 79mm

(23 mm step to inner pane)

## Fabrication & Assembly Framless Opening Shutters

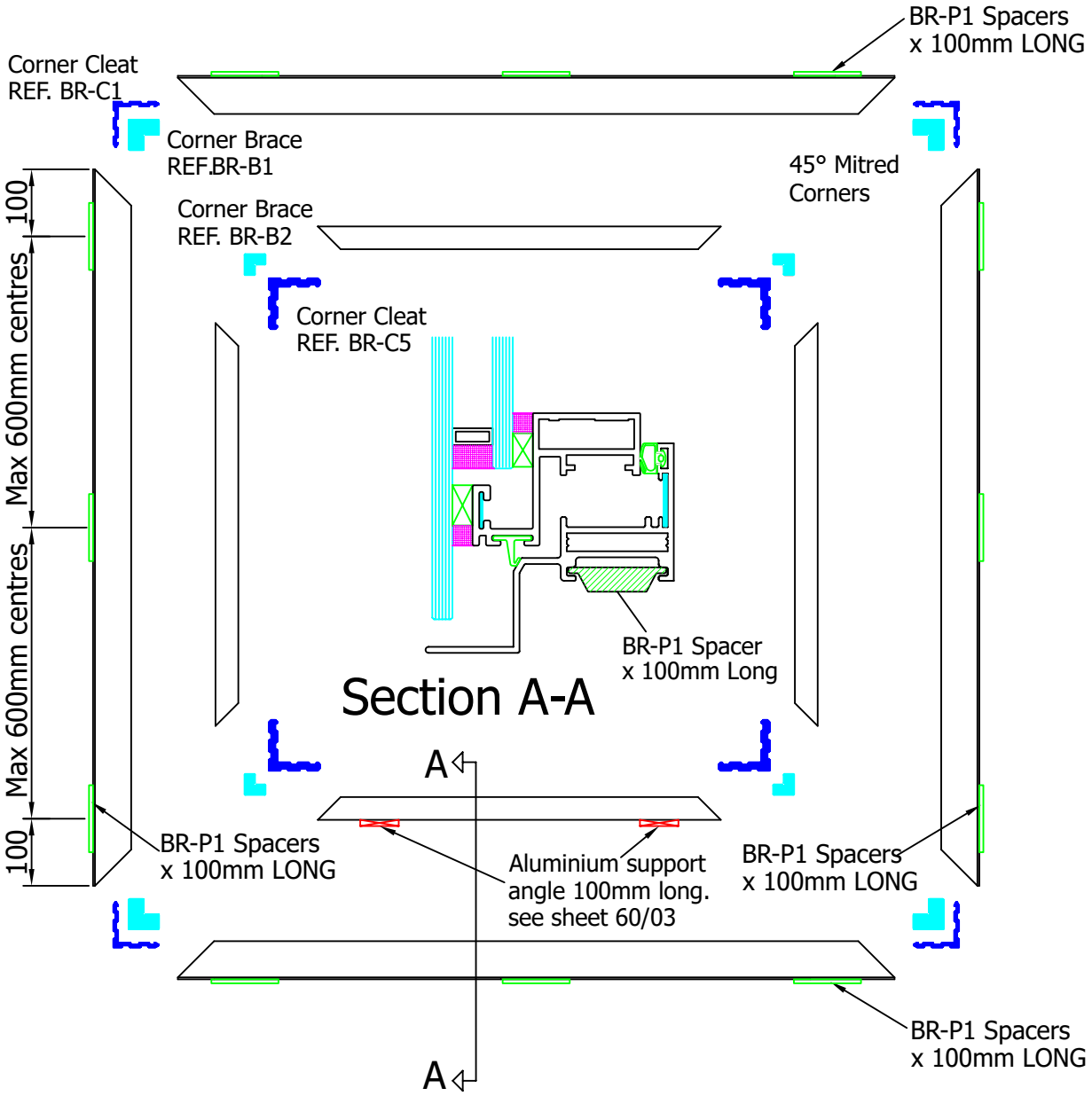


Outer frame height bar = transom centres - 21mm

Outer frame width bar = mullion centers - 21mm

Vent frame height bar = transom centres - 85mm

Vent frame width bar = mullion centres - 85mm

Glass size = mullion centres - 41mm (45mm step to inner pane)

Glass size = transom centres - 41mm (45mm step to inner pane)

BR-P1 Spacers = 100mm long pieces at fixing screw points on all 4 sides

## Fabrication & Assembly Framless Opening Shutters

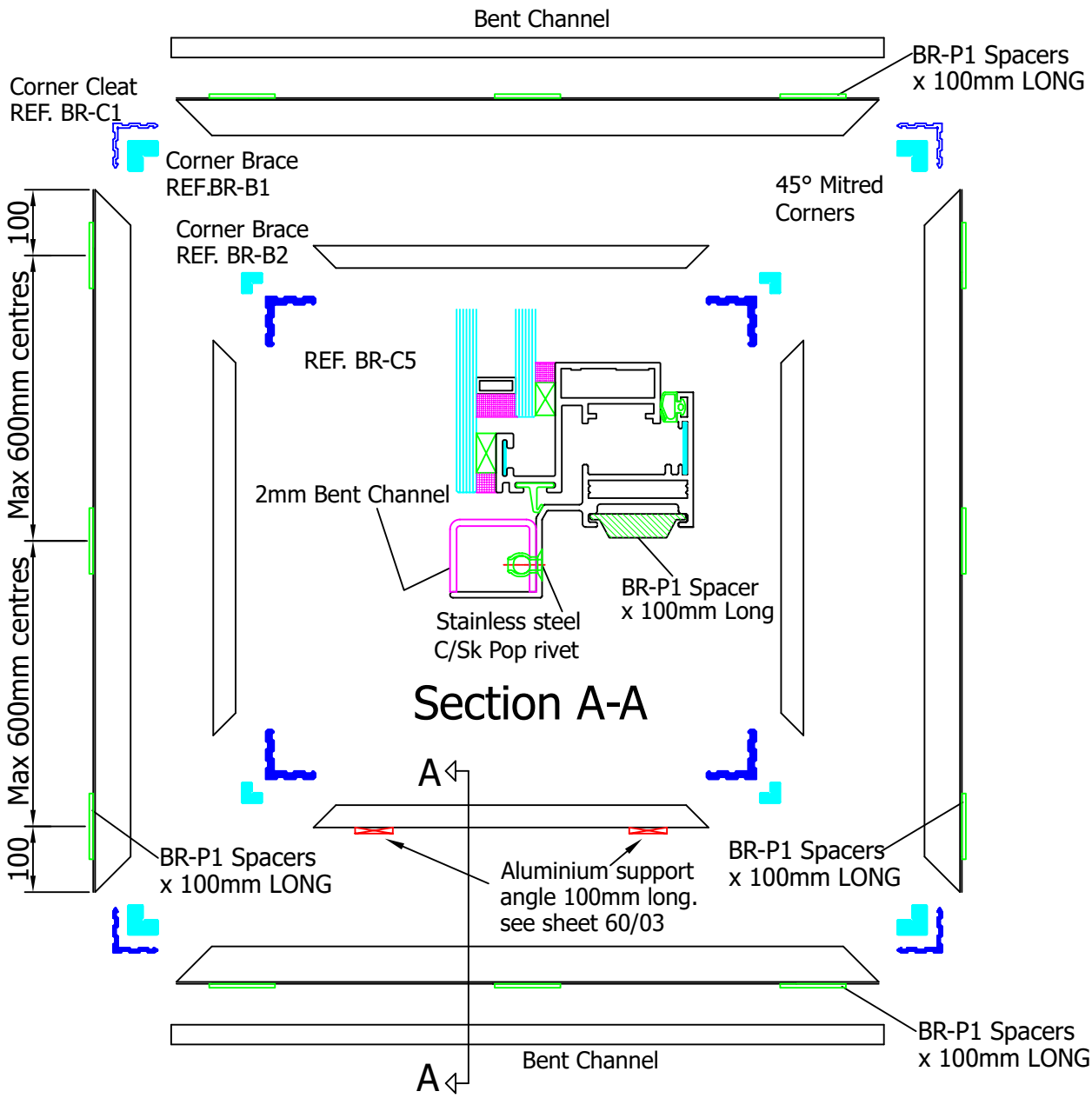


Outer frame height bar = transom centres - 21mm

Outer frame width bar = mullion centers - 21mm

Vent frame height bar = transom centres - 85mm

Vent frame width bar = mullion centres - 85mm

Glass size = mullion centres - 41mm (45mm step to inner pane)

Glass size = transom centres - 85mm (23mm step to inner pane)

BR-P1 Spacers = 100mm long pieces at fixing screw points on all 4 sides

Bent Channels = mullion centres - 25mm

## Fabrication & Assembly Framless Opening Shutters

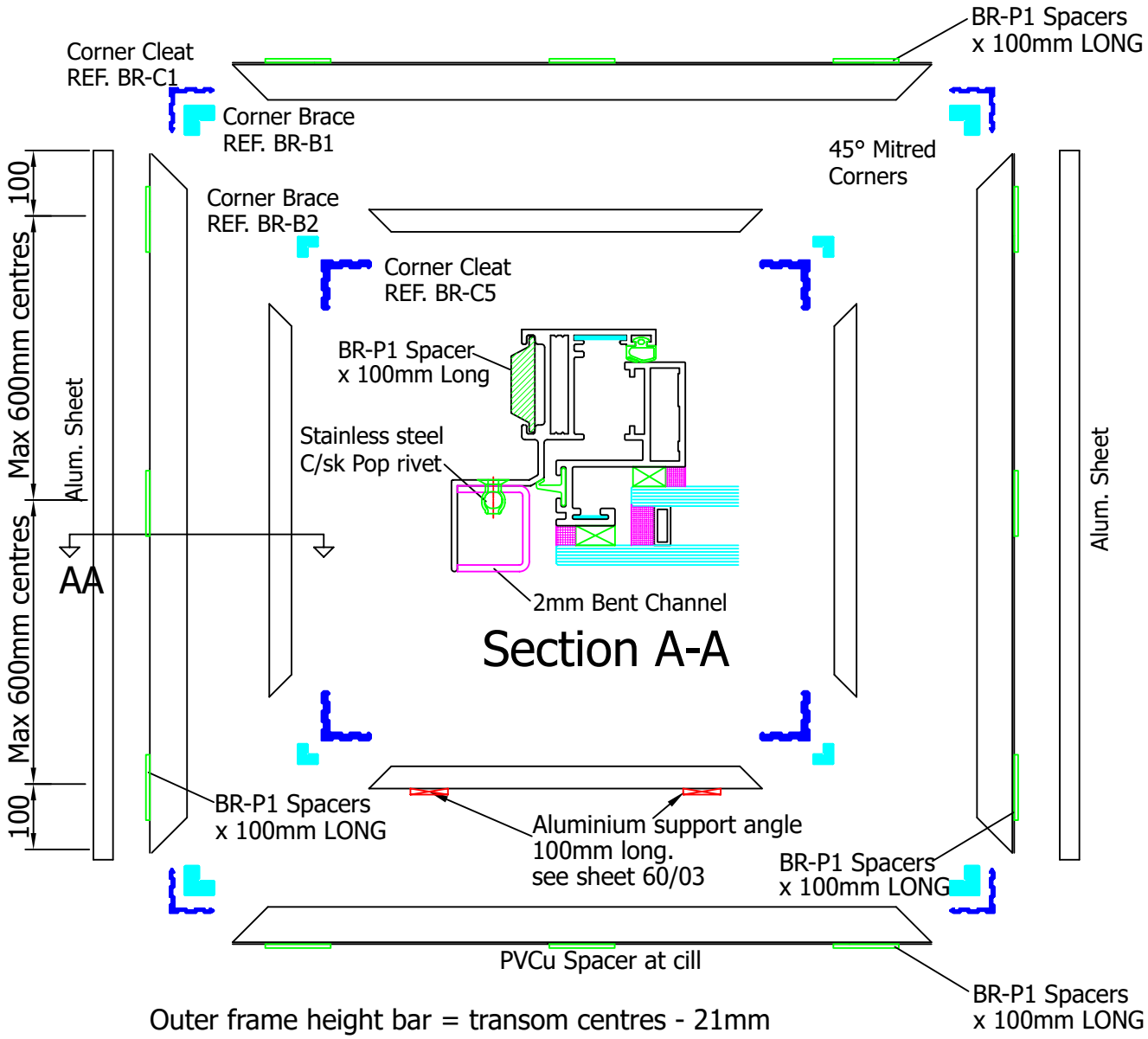


Outer frame height bar = transom centres - 21mm

Outer frame width bar = mullion centers - 21mm

Vent frame height bar = transom centres - 85m

Vent frame width bar = mullion centres - 85mm

Glass size = mullion centres - 85mm (23mm stepped edge)

Glass size = transom centres - 41mm (45mm stepped edge)

BR-P1 Spacers = 100mm long pieces at fixing screw points on all 4 sides

Bent Channel = Transom Centres - 25mm

## Fabrication & Assembly Framless Opening Shutters

Weatherseal BR-01

Cut weatherseal to length with 90 degree cut-outs at corner positions. Fit weatherseal into section grooves.
The weatherseal should not be stretched (See detail below for fitting direction).
Glue all corners and joints with appropriate adhesive.

Weatherseal to be butt jointed centrally at top of vent

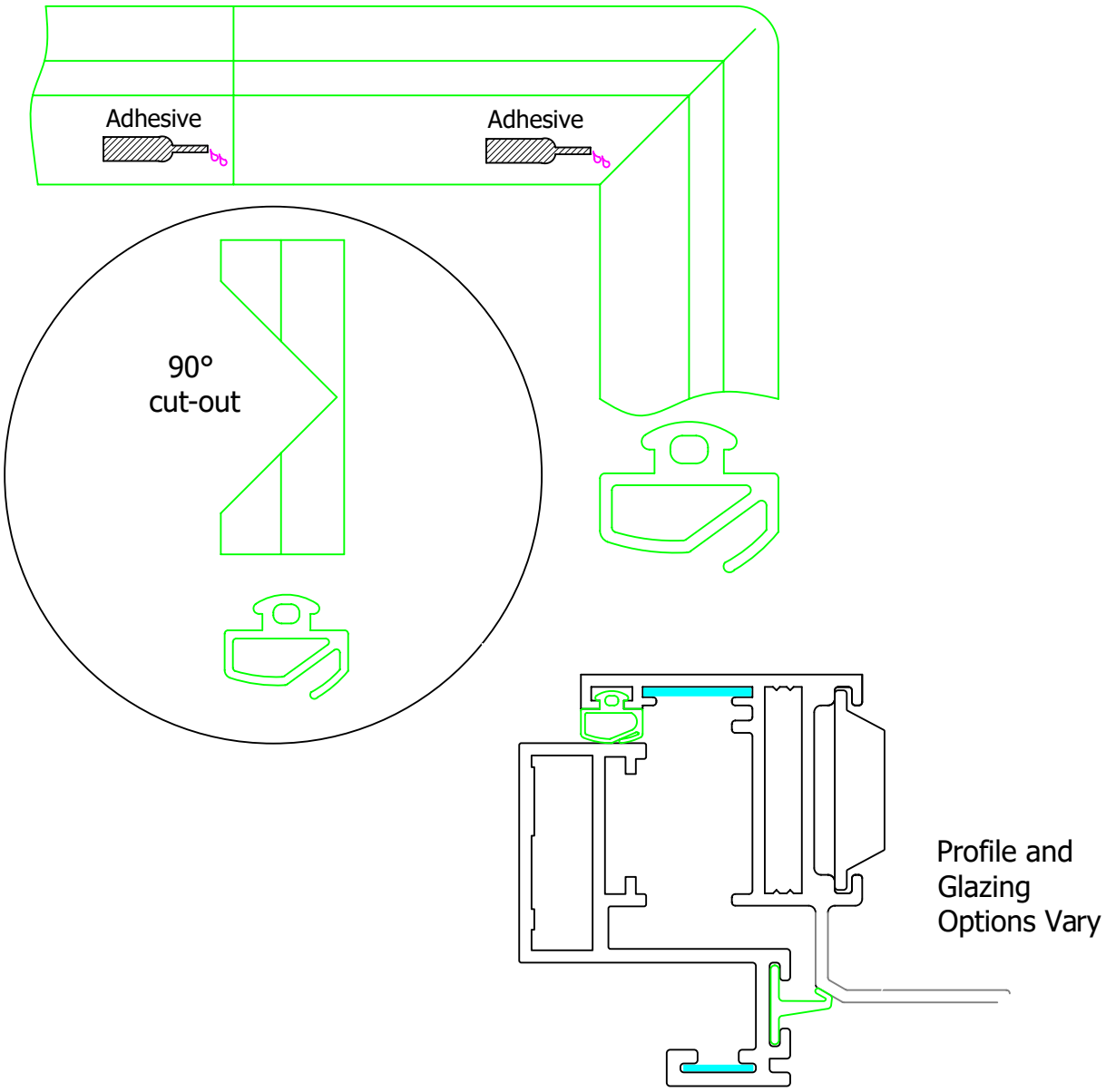

## Fabrication & Assembly Framless Opening Shutters

1. Cut and prepare all of the components as described in this document.

2. Fit the espagnolette locking rod as shown in this manual

3. Apply sealant around the corner cleats (and corner braces) and insert them into the ends of the the sash & frame members.

4. Apply sealant around the ends of the vent & outer frame members and push the joints together then crimp the joints together using a purpose set crimping machine.

5. Cut away frame at opposite corners to give access to PVCu spacers (BR-P1) and then slide into position and secure with No.8 x 16mm countersunk self tapping screws.

6. Cut weatherseal BR - 01 to length ( as detailed on sheet 71/14) and push fit into grooves of outer frame. Glue all corners and joints with appropriate adhesive.

7. Fit the make up tubes to head, cill or Jamb sections where applicable with stainless steel c/sk head self tapping screws. Ensure that tubes are sealed at each end and along their length.

8. Clean any excess sealant off the surface of the frames using appropriate cleaning solution.

9. Complete the instalation of the espagnolette lock system including the handle and lock keeps, adjust as necessary to ensure smooth operation.

10. Glaze the vent frame as described in the section on glazing.

11. Offer the assembled glazed vent & outer frame and fix as previously described in the mullion/transom assembly section.

## Fabrication & Assembly Framless Opening Shutters

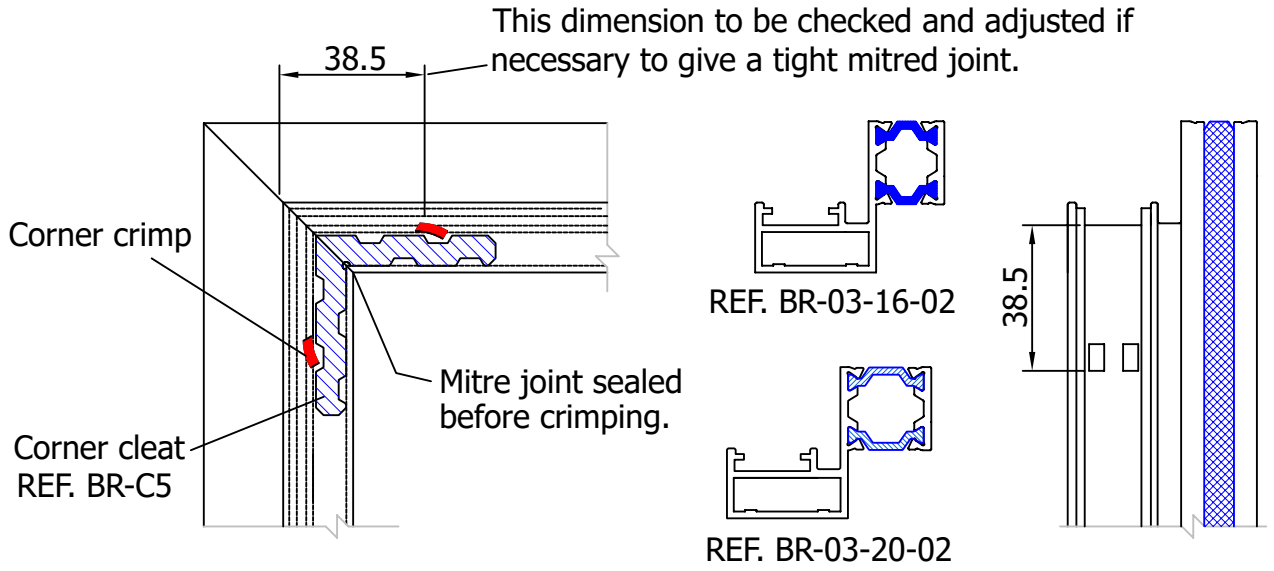


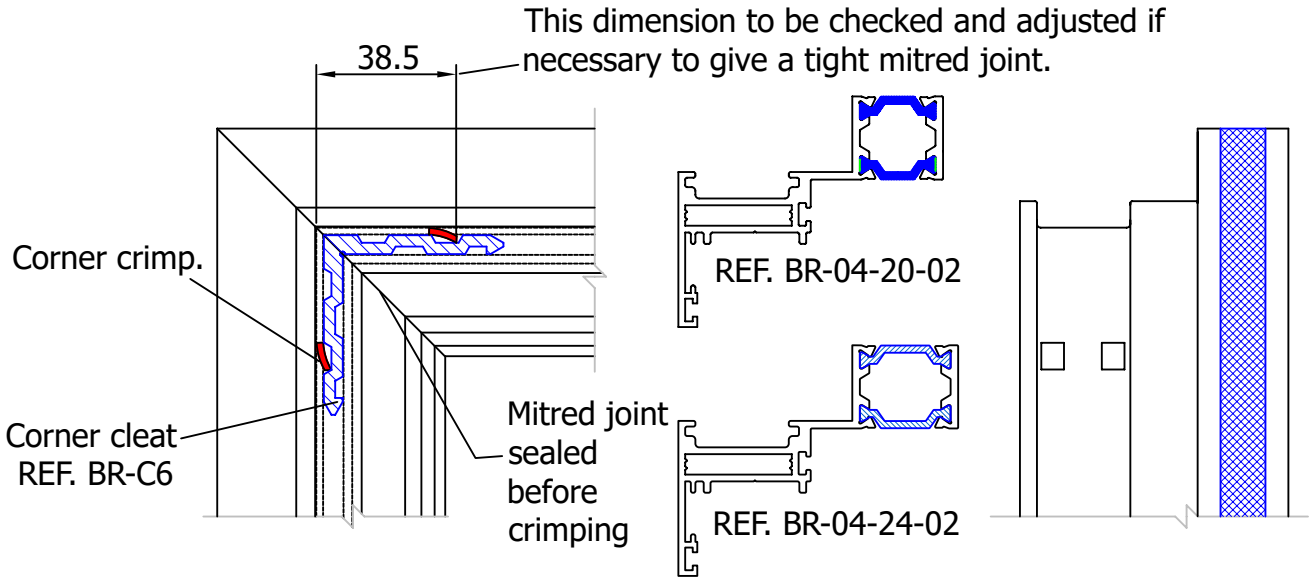


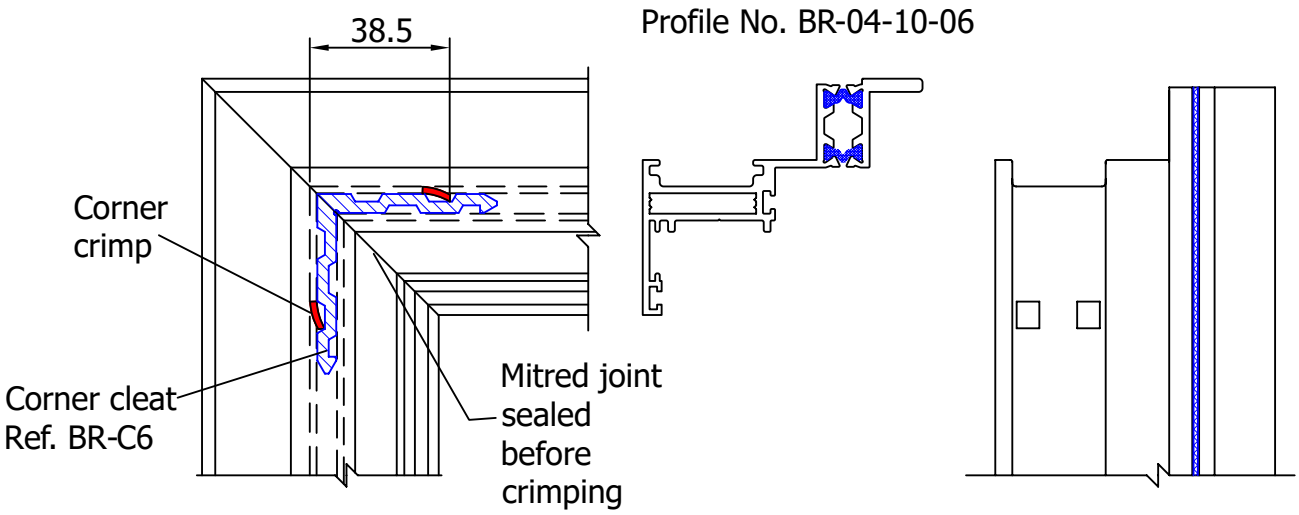

## Fabrication & Assembly Framless Opening Shutters

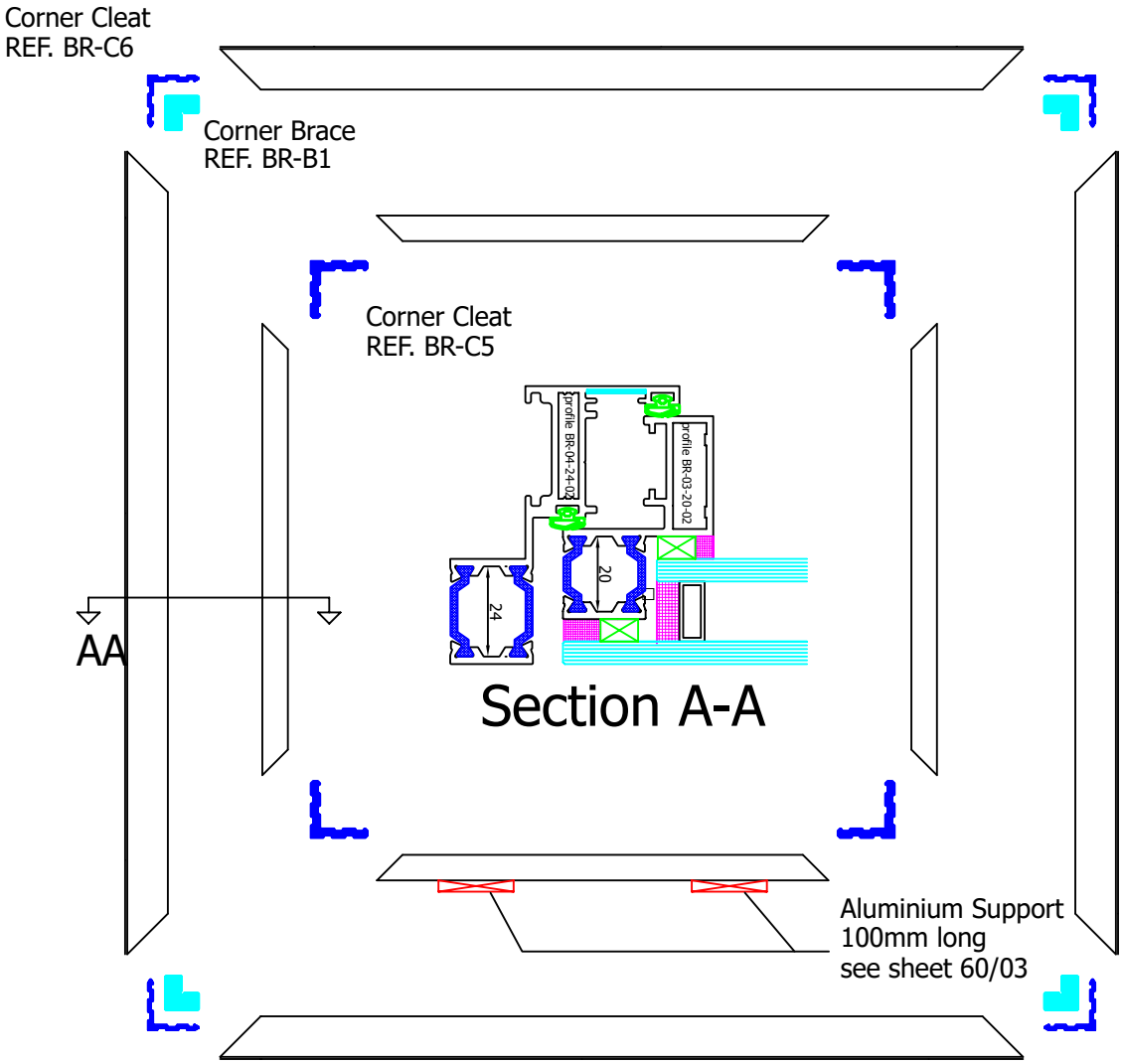


BR-04-24-02 Outer frame height bar = transom centres - 18mm (End cut 45°)
BR-04-24-02 Outer frame width bar = mullion centres - 18mm (End cut 45°)
BR-03-20-02 Vent frame height bar = transom centres - 78mm (End cut 45°)
BR-03-20-02 Vent frame width bar = mullion centres - 78mm (End cut 45°)
Glass size = mullion/transom centres - less 78mm
(25 mm step to inner pane)

## Fabrication & Assembly Framless Opening Shutters

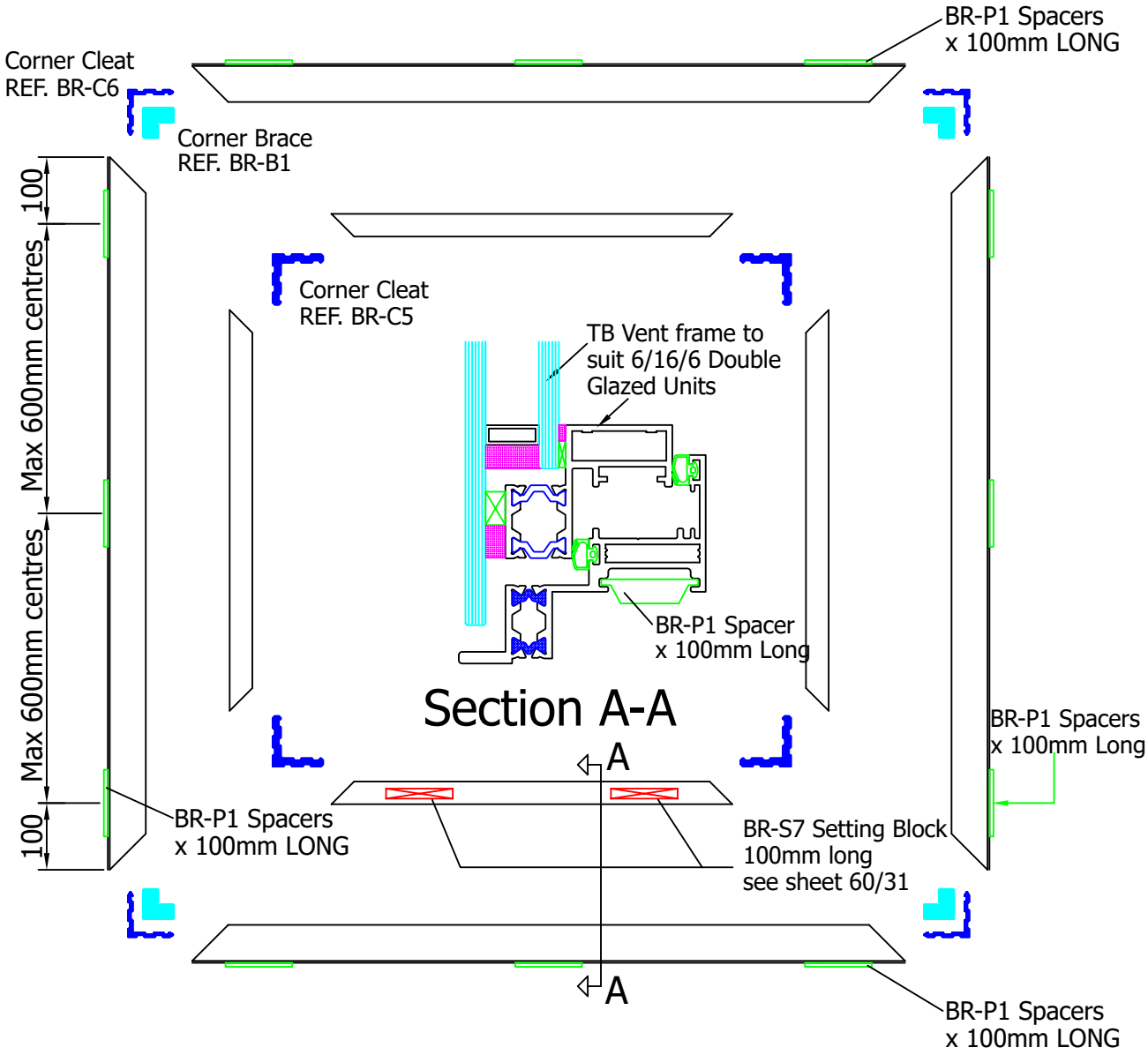


04-10-06 = Outer frame height bar = transom centres - 21mm

04-10-06 = Outer frame width bar = mullion centres - 21mm

03-16-02 = Vent frame height bar = transom centres - 84mm

03-16-02 = Vent frame width bar = mullion centres - 84mm

BR-P1 = Spacers = 100mm long pieces at fixing screw points on all 4 sides

Glass width size = mullion centres - 44mm ( 47mm step to inner pane )

Glass height size = transom centres - 44mm ( 47mm step to inner pane )

## Fabrication & Assembly Framless Opening Shutters

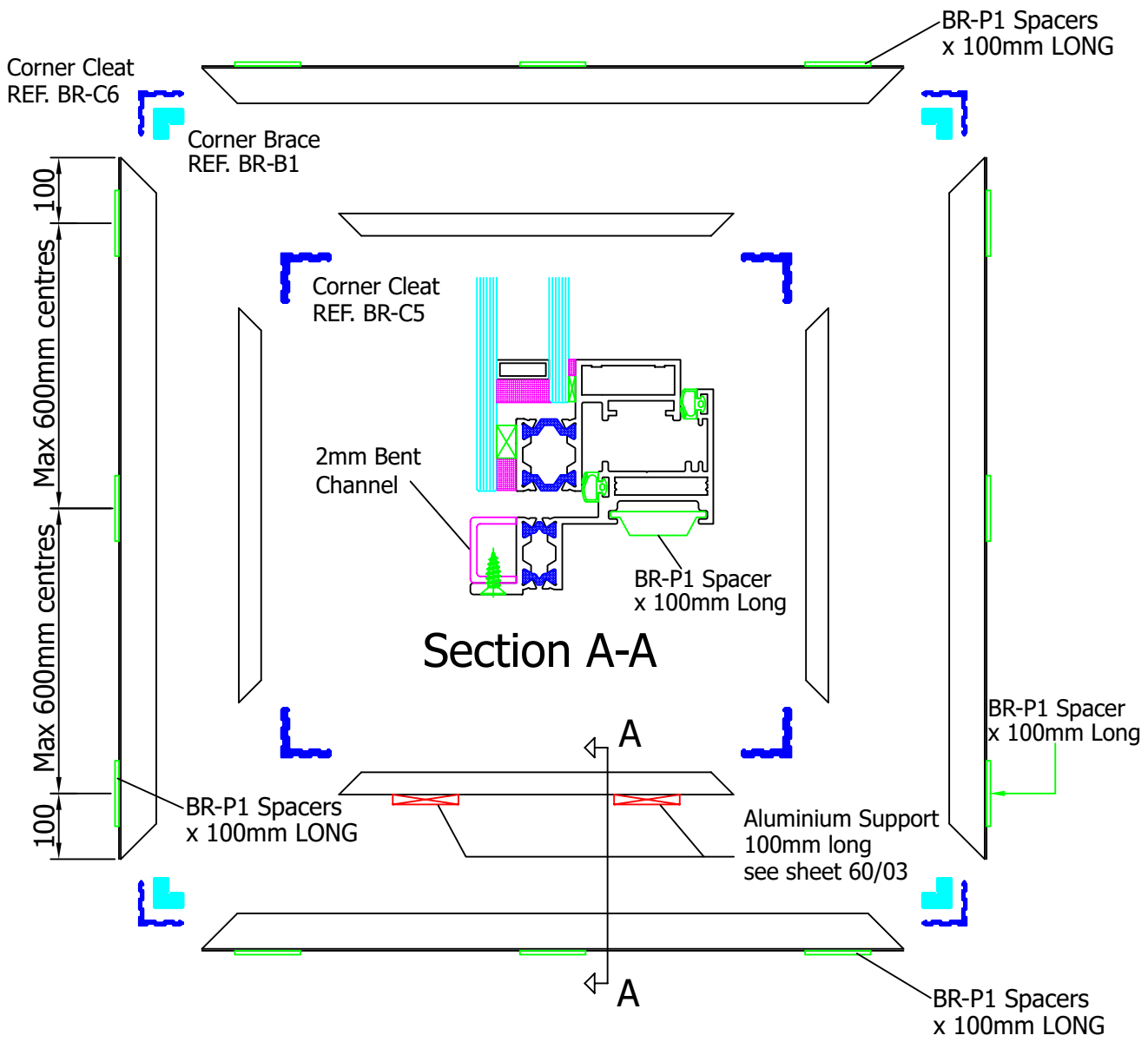


BR-04-10-06 = Outer frame height bar = transom centres - 21mm

BR-04-10-06 = Outer frame width bar = mullion centres - 21mm

BR-03-16-02 = Vent frame height bar = transom centres - 84mm

BR-03-16-02 = Vent frame width bar = mullion centres - 84mm

BR-P1 = Spacers = 100mm long pieces at fixing screw points on all 4 sides

Glass width size = mullion centres - 44mm ( 47mm step to inner pane)

Glass height size = transom centres - 84mm ( 27mm step to inner pane)

2mm Bent Channel = mullion centres - 29mm

# Fabrication & Assembly Framless Opening Shutters

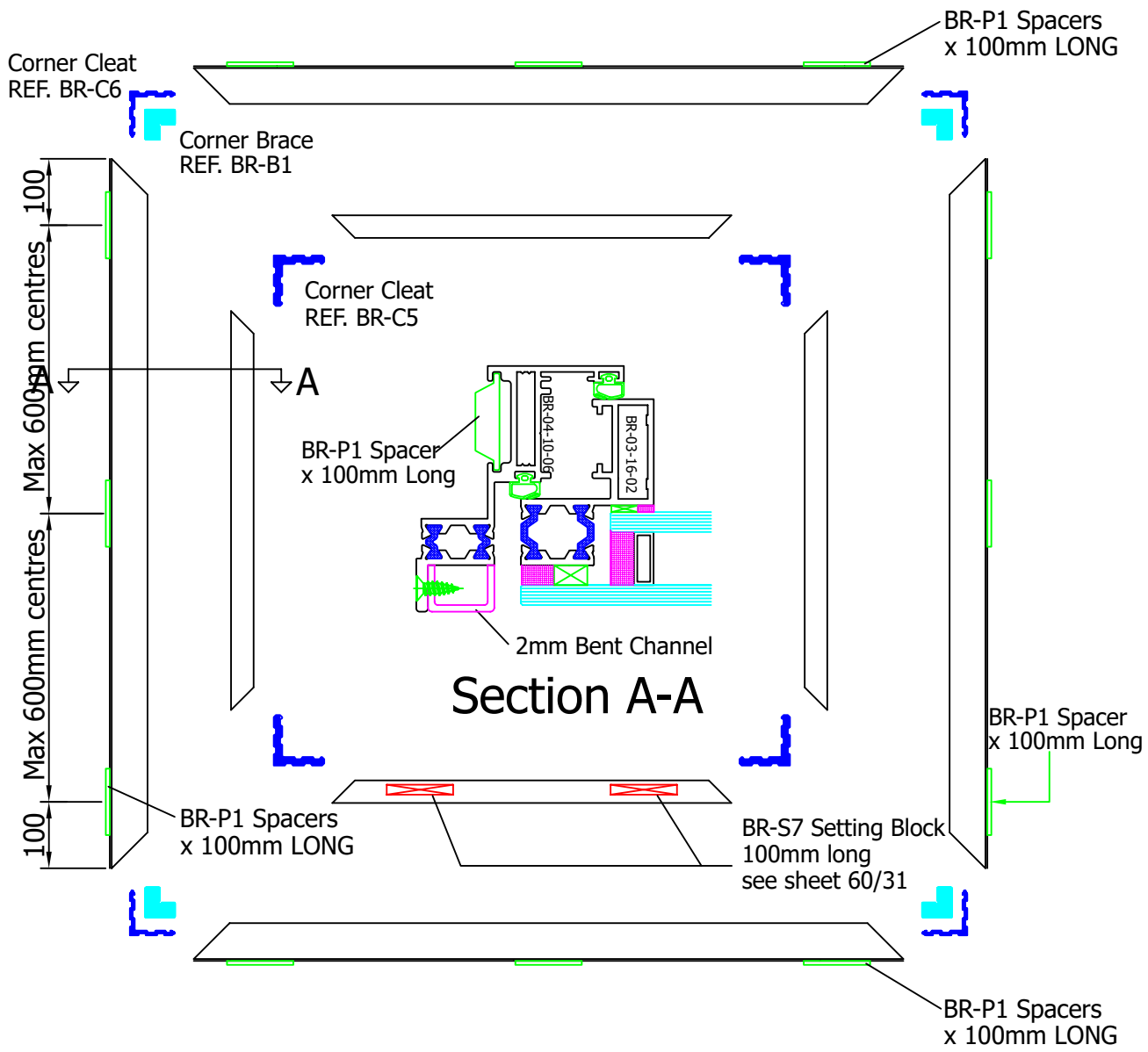


BR-04-10-05 = Outer frame height bar = transom centres - 21mm (end cut 45°)

BR-04-10-05 = Outer frame width bar = mullion centres - 21mm (end cut 45°)

BR-03-16-02 = Vent frame height bar = transom centres - 84mm (end cut 45°)

BR-03-16-02 = Vent frame width bar = mullion centres - 84mm (end cut 45°)

BR-P1 = Spacers = 100mm long pieces at fixing screw points on all 4 sides

Glass width size = mullion centres - 84mm ( 27mm step to inner pane)

Glass height size = transom centres - 44mm ( 47mm step to inner pane)

2mm Bent Channel = transom centres - 29mm

## Fabrication & Assembly Framless Opening Shutters

Weatherseal BR-01

Cut weatherseal to length with 90 degree cut-outs at corner positions. Fit weatherseal into section grooves.
The weatherseal should not be stretched (See detail below for fitting direction).
Glue all corners and joints with appropriate adhesive.

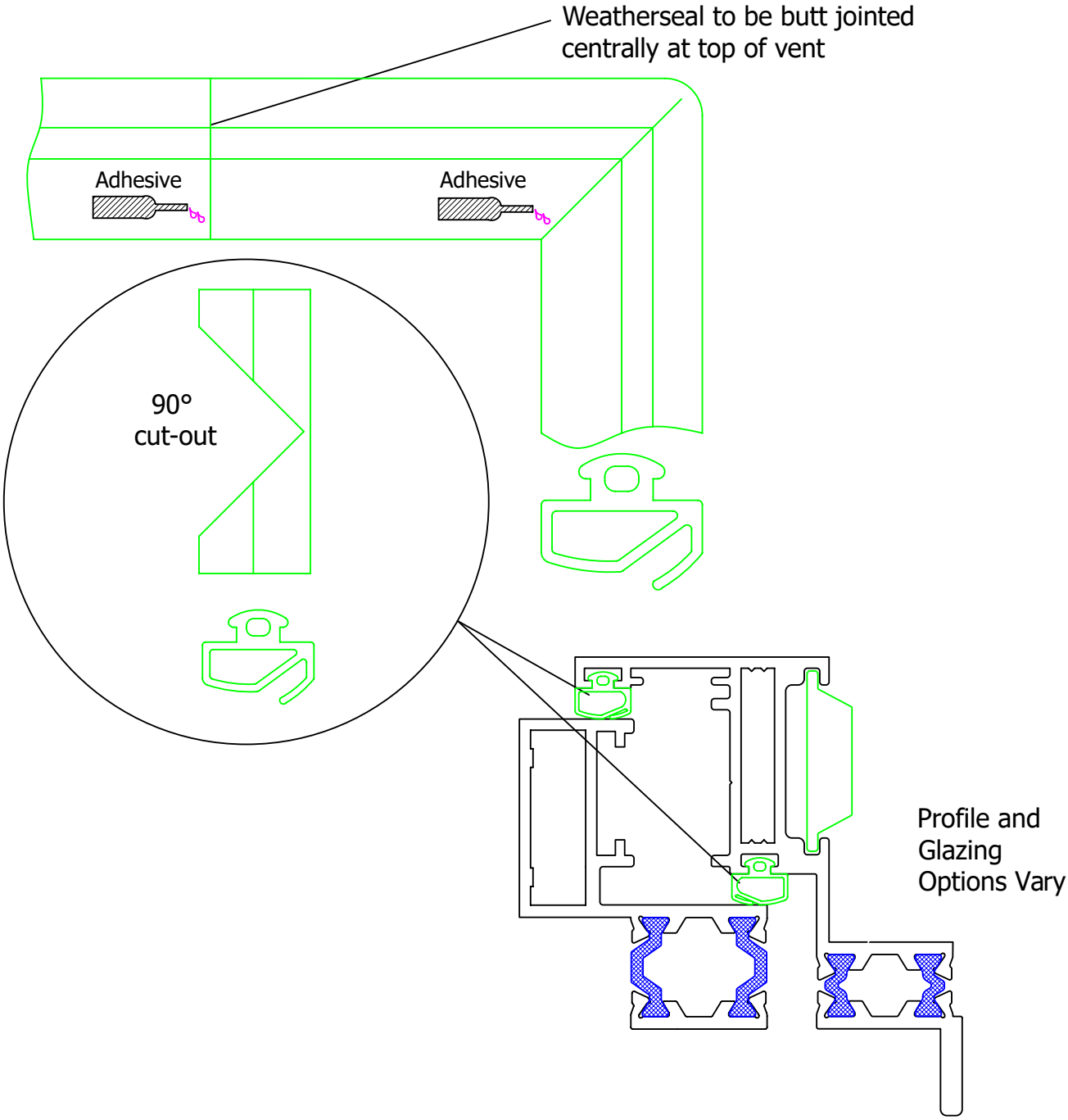

## Fabrication & Assembly Framless Opening Shutters

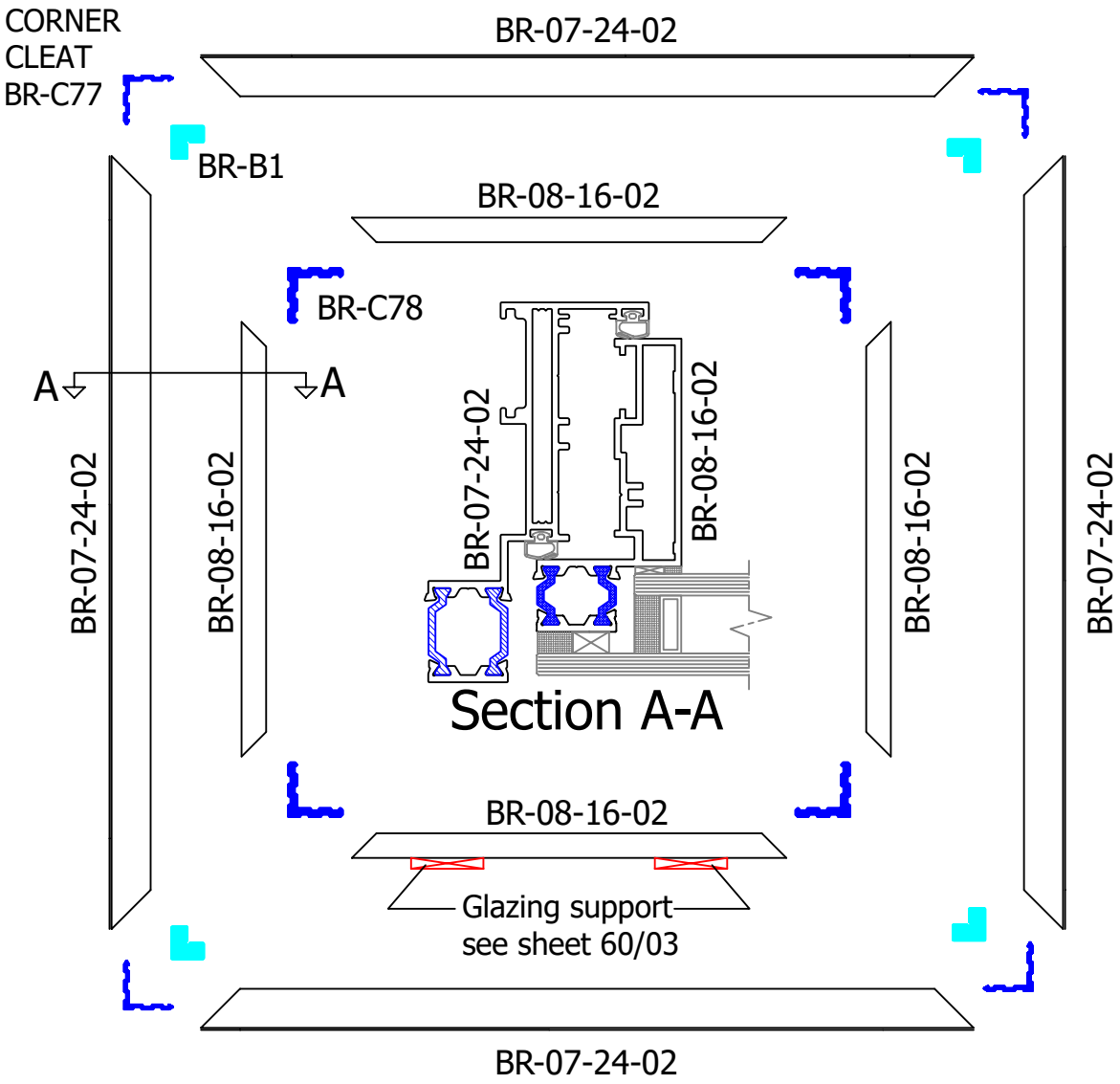


BR-07-24-02 - Outer frame height bar = Transom centres - 18mm (Ends cut 45°)
BR-07-24-02 - Outer frame width bar = Mullion centres - 18mm (Ends cut 45°)
BR-08-16-02 - Vent frame height bar = Transom centres - 78mm (Ends cut 45°)
BR-08-16-02 - Vent frame width bar = Mullion centres - 78mm (Ends cut 45°)

Glass size = Mullion/transom centres - 78mm (25mm Step to inner pane)

## Fabrication & Assembly Framless Opening Shutters

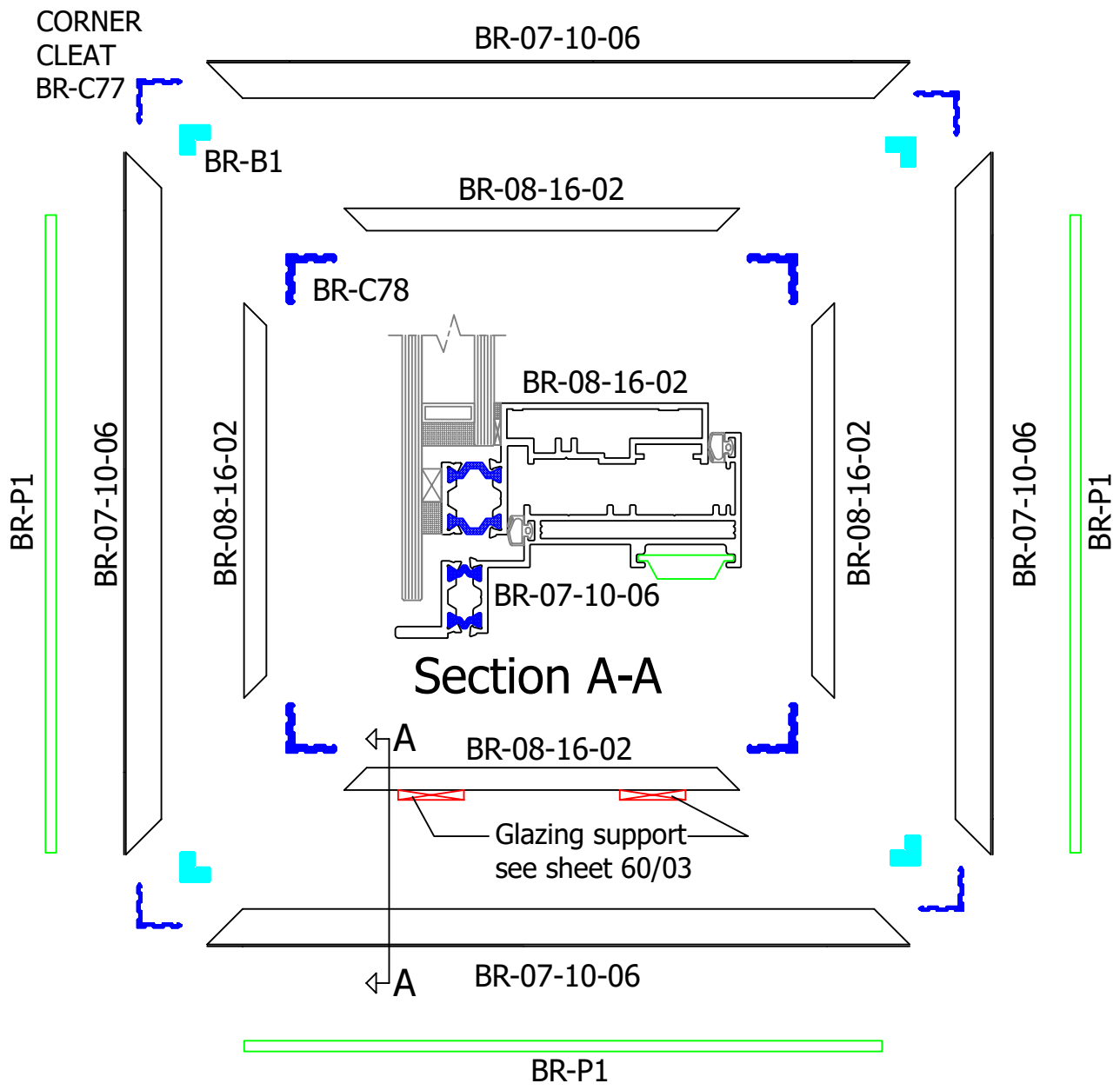


BR-07-10-06 - Outer frame height bar = Transom centres - 21mm (Ends cut 45°)
BR-07-10-06 - Outer frame width bar = Mullion centres - 21mm (Ends cut 45°)
BR-08-16-02 - Vent frame height bar = Transom centres - 84mm (Ends cut 45°)
BR-08-16-02 - Vent frame width bar = Mullion centres - 84mm (Ends cut 45°)

BR-P1 - Spacer at cill = Mullion centres - 74mm (Ends cut sq)
BR-P1 - Spacer at jambs = Transom centres - 74mm (Ends cut sq)

Glass size = Mullion/transom centres - 44mm (47mm Step to inner pane)

## Fabrication & Assembly Framless Opening Shutters

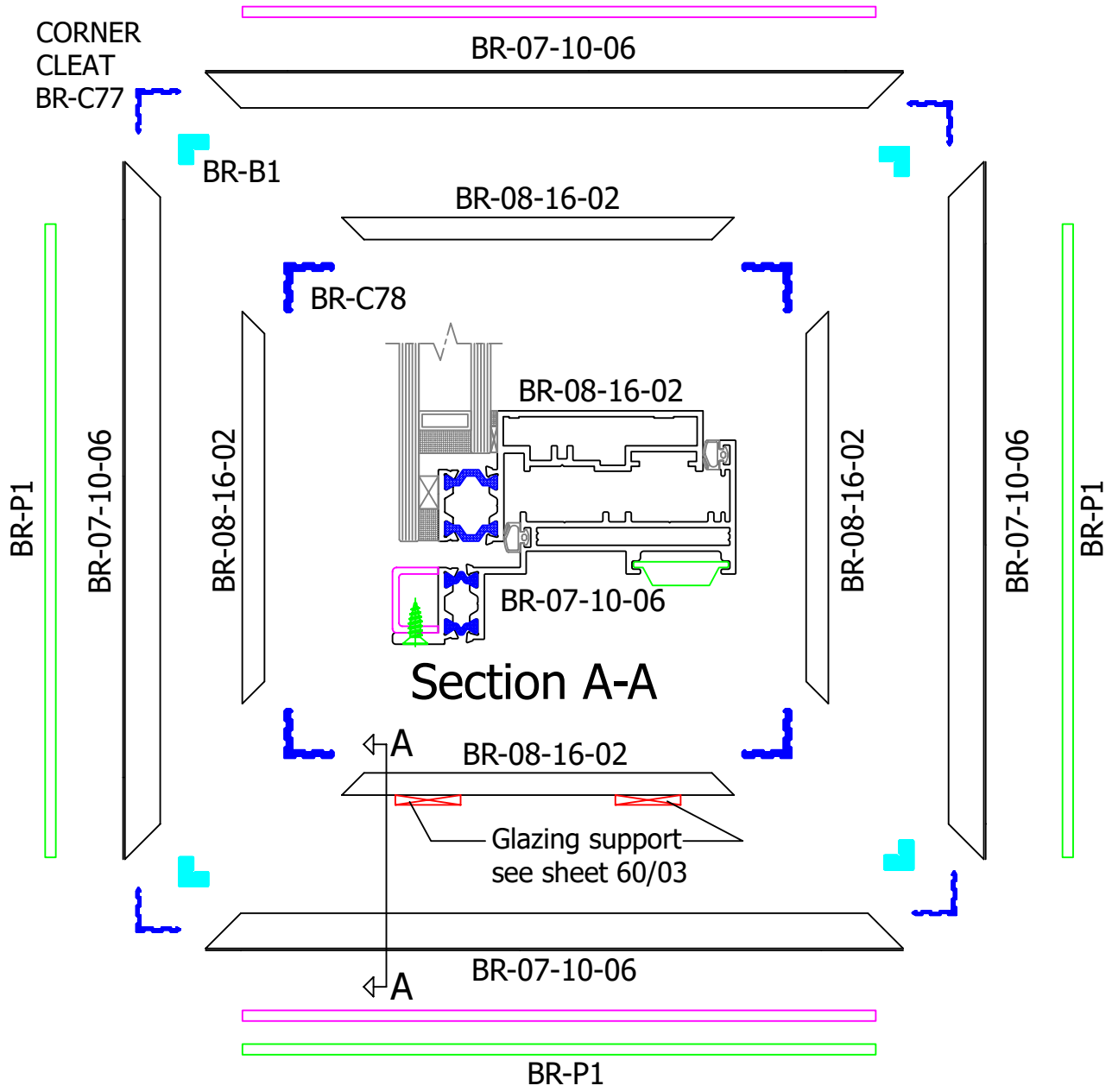


BR-07-10-06 - Outer frame height bar = Transom centres - 21mm (Ends cut 45°)
BR-07-10-06 - Outer frame width bar = Mullion centres - 21mm (Ends cut 45°)
BR-08-16-02 - Vent frame height bar = Transom centres - 84mm (Ends cut 45°)
BR-08-16-02 - Vent frame width bar = Mullion centres - 84mm (Ends cut 45°)

2mm Bent channel width = Mullion centres - 29mm (Ends cut sq)

BR-P1 - Spacer at cill = Mullion centres - 74mm (Ends cut sq)
BR-P1 - Spacer at jambs = Transom centres - 74mm (Ends cut sq)

Glass width size = Mullion centres - 44mm (47mm Step to inner pane)
Glass height size = Transom centres - 84mm (27mm Step to inner pane)

## Fabrication & Assembly Framless Opening Shutters

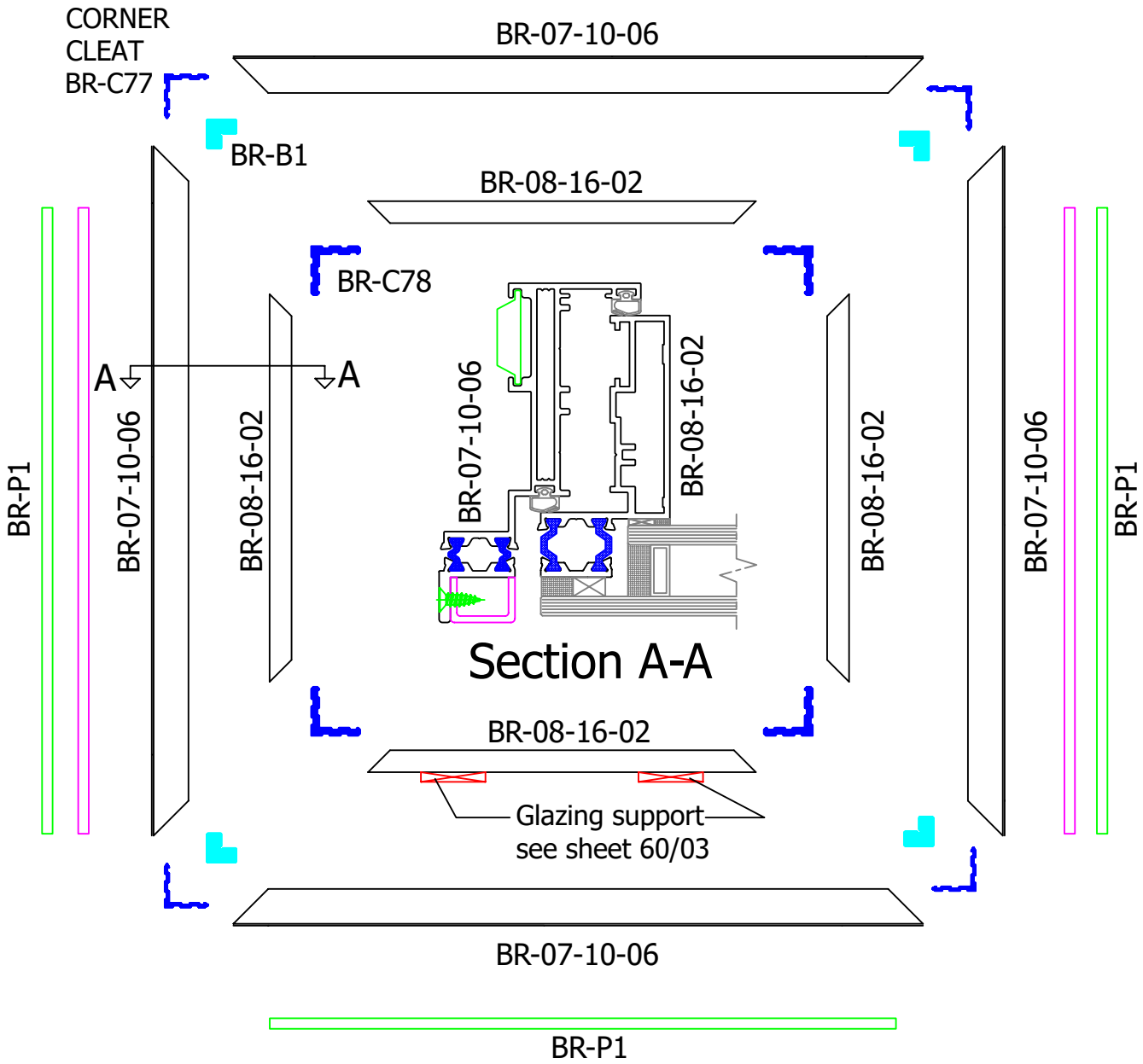


BR-07-10-06 - Outer frame height bar = Transom centres - 21mm (Ends cut 45°)
BR-07-10-06 - Outer frame width bar = Mullion centres - 21mm (Ends cut 45°)
BR-08-16-02 - Vent frame height bar = Transom centres - 84mm (Ends cut 45°)
BR-08-16-02 - Vent frame width bar = Mullion centres - 84mm (Ends cut 45°)

2mm Bent channel height = Transom centres - 29mm (Ends cut sq)

BR-P1 - Spacer at cill = Mullion centres - 74mm (Ends cut sq)
BR-P1 - Spacer at jambs = Transom centres - 74mm (Ends cut sq)

Glass width size = Mullion centres - 84mm (27mm Step to inner pane)
Glass height size = Transom centres - 44mm (47mm Step to inner pane)

## Fabrication & Assembly Framed Opening Shutters

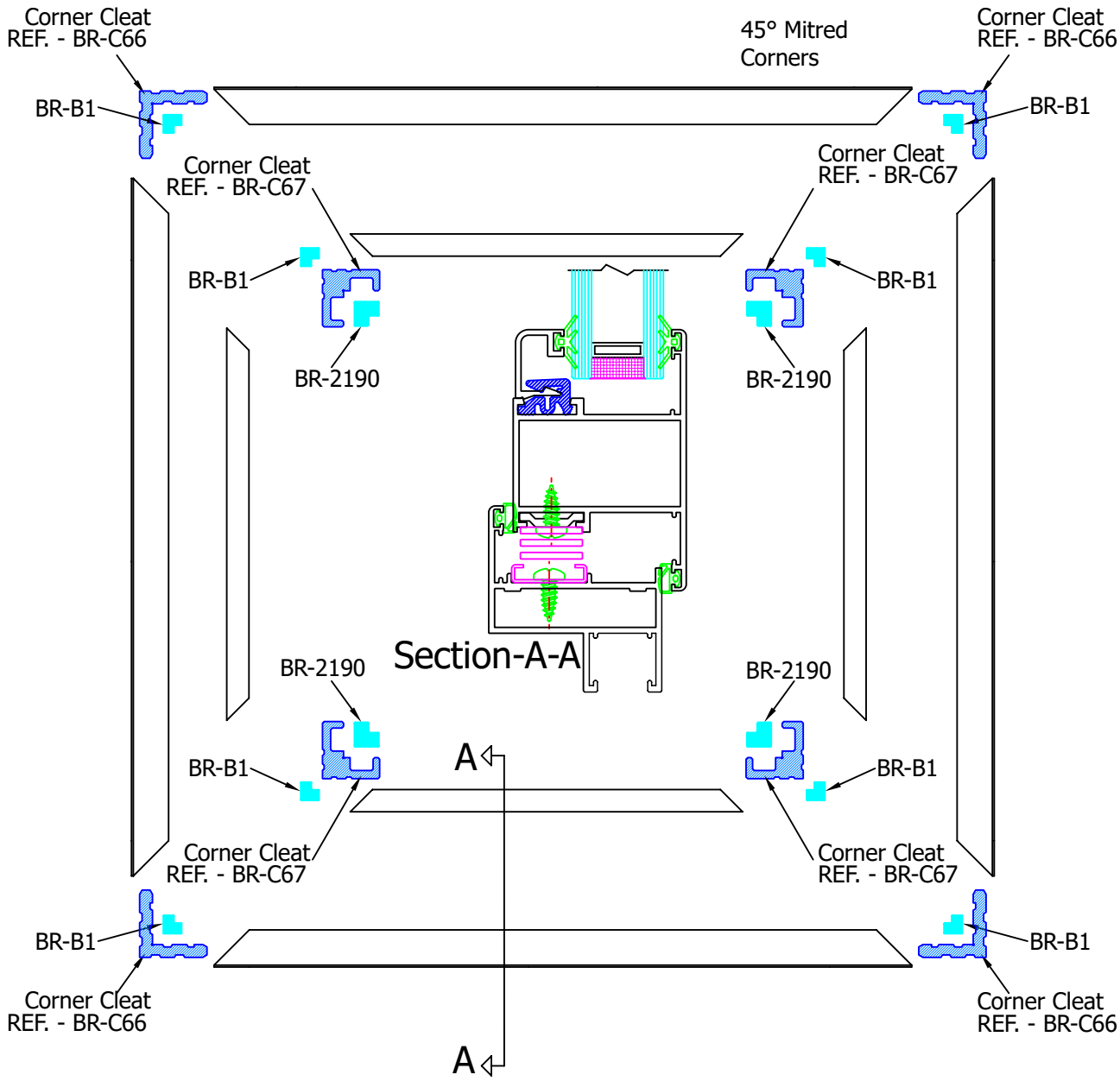


Outer frame (BR-TT91) height bar = transom centres - 22mm (end cut 45°)

Outer frame (BR-TT91) width bar = mullion centers - 22mm (end cut 45°)

Vent frame (BR-TT74) height bar = transom centres - 85mm (end cut 45°)

Vent frame (BR-TT74) width bar = mullion centres - 85mm (end cut 45°)

Glass size = mullion centres - 214mm

Glass size = transom centres - 214mm

Glass Bead (BR-TT94) = mullion centres - 202mm. ( ends cut 45° )

Glass Bead (BR-TT25) = transom centres - 192.5mm. ( ends cut 45° )

## Fabrication & Assembly Framed Opening Shutters

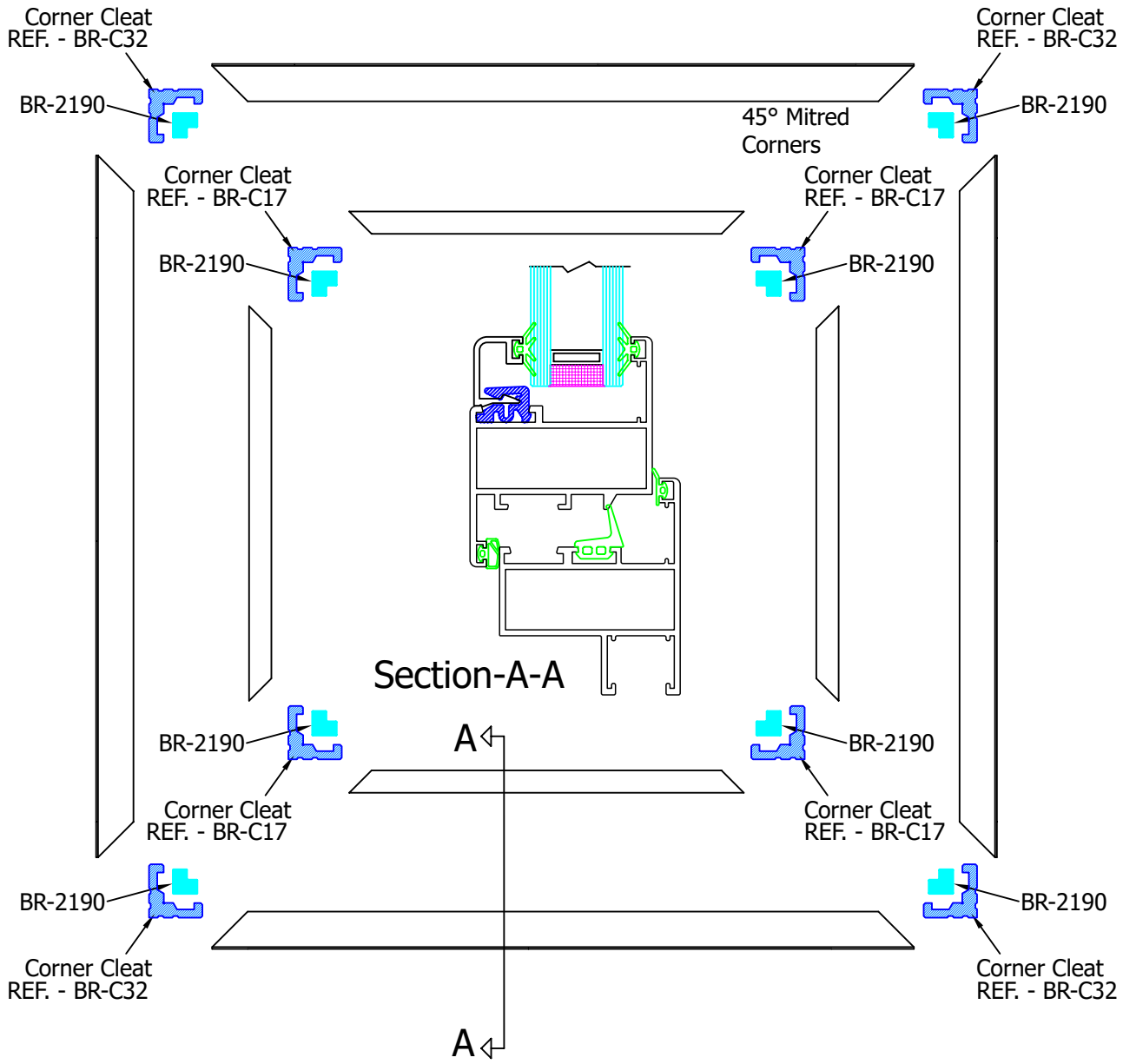


Outer frame (BR-TT87) height bar = transom centres - 21mm (end cut 45°)

Outer frame (BR-TT87) width bar = mullion centers - 21mm (end cut 45°)

Vent frame (BR-TT24) height bar = transom centres - 99mm (end cut 45°)

Vent frame (BR-TT24) width bar = mullion centres - 99mm (end cut 45°)

Glass size = mullion centres - 209mm

Glass size = transom centres - 209mm

Glass Bead (BR-TT94) = mullion centres - 198mm. ( ends cut 45° )

Glass Bead (BR-TT25) = transom centres - 188.5mm. ( ends cut 45° )

## Fabrication & Assembly Framed Opening Shutters

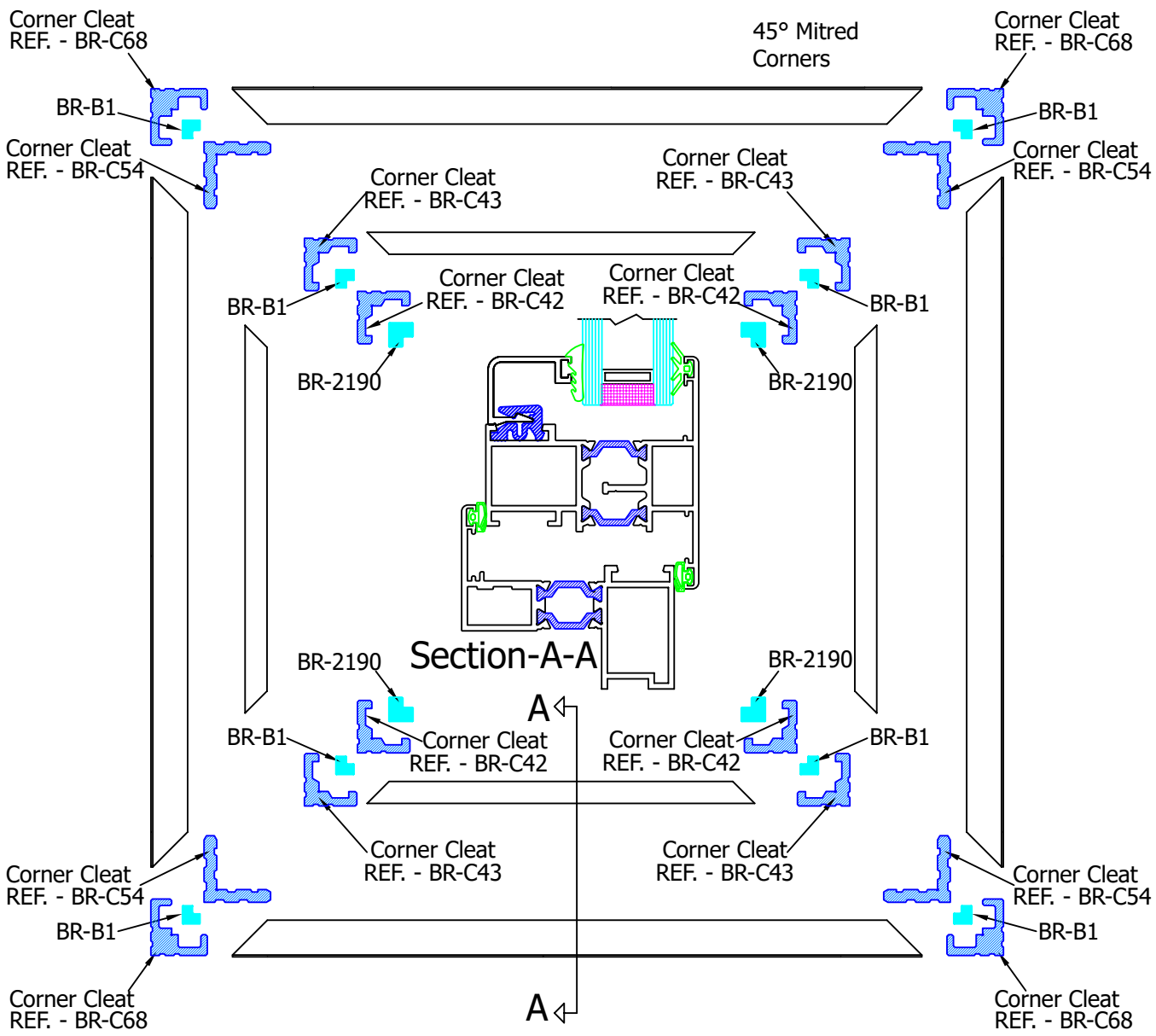


Outer frame (BR-TT61-20-92) height bar = transom centres - 21mm (end cut 45°)

Outer frame (BR-TT61-20-92) width bar = mullion centers - 21mm (end cut 45°)

Vent frame (BR-TT62-20-63) height bar = transom centres - 84mm (end cut 45°)

Vent frame (BR-TT62-20-63) width bar = mullion centres - 84mm (end cut 45°)

Glass size = mullion centres - 198mm

Glass size = transom centres - 198mm

Glass Bead (BR-TT70) = mullion centres - 186mm. ( ends cut 45° )

Glass Bead (BR-TT71) = transom centres - 176.5mm. ( ends cut 45° )

## Fabrication & Assembly Framed Opening Shutters

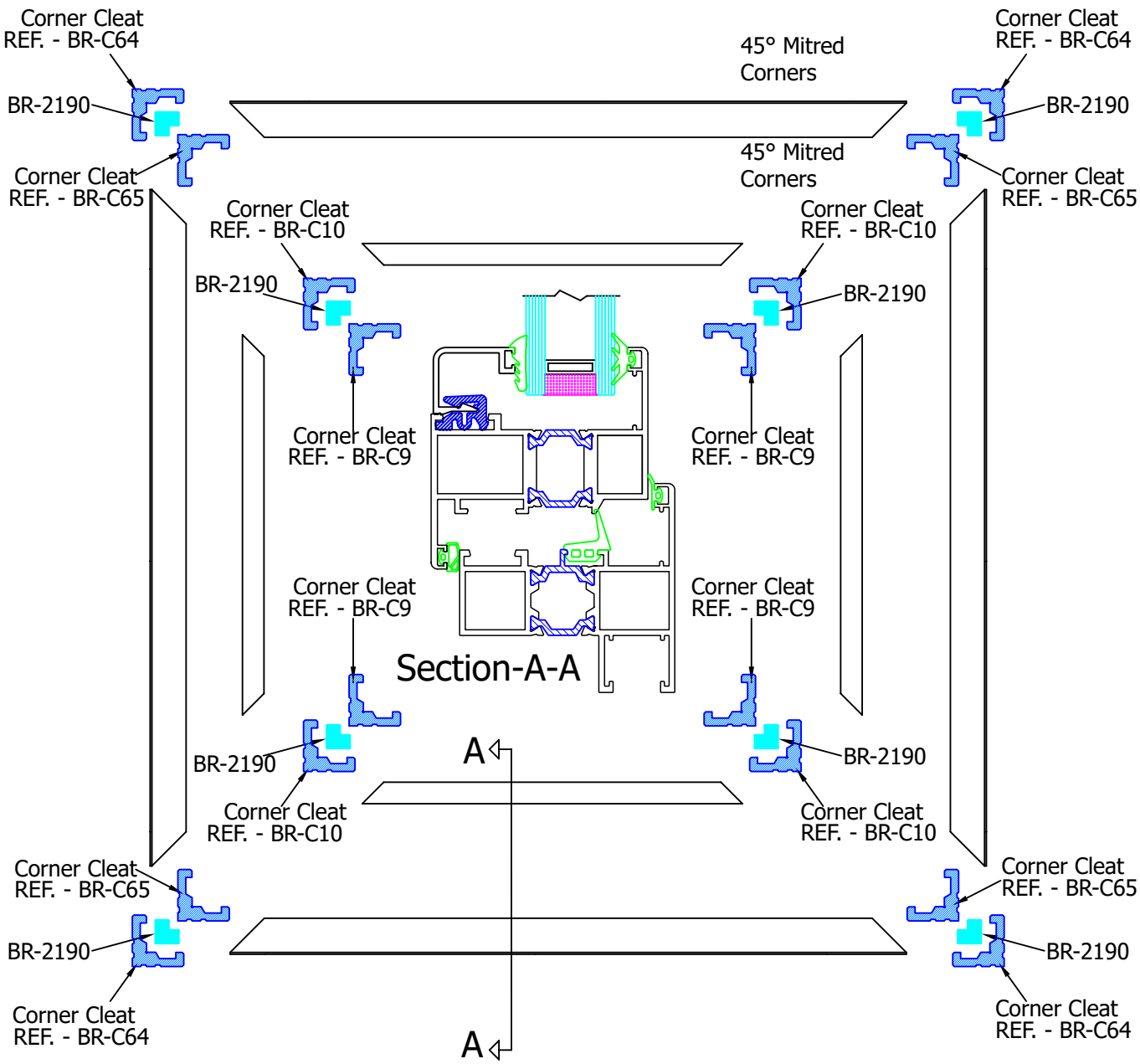


Outer frame (BR-TT30-20-31) height bar = transom centres - 21mm (end cut 45°)

Outer frame (BR-TT30-20-31) width bar = mullion centers - 21mm (end cut 45°)

Vent frame (BR-TT12-20-11) height bar = transom centres - 99mm (end cut 45°)

Vent frame (BR-TT12-20-11) width bar = mullion centres - 99mm (end cut 45°)

Glass size = mullion centres - 209mm

Glass size = transom centres - 209mm

Glass Bead (BR-TT70) = mullion centres - 197mm. ( ends cut 45° )

Glass Bead (BR-TT71) = transom centres - 187.5mm. ( ends cut 45° )

## Fabrication & Assembly - Misc

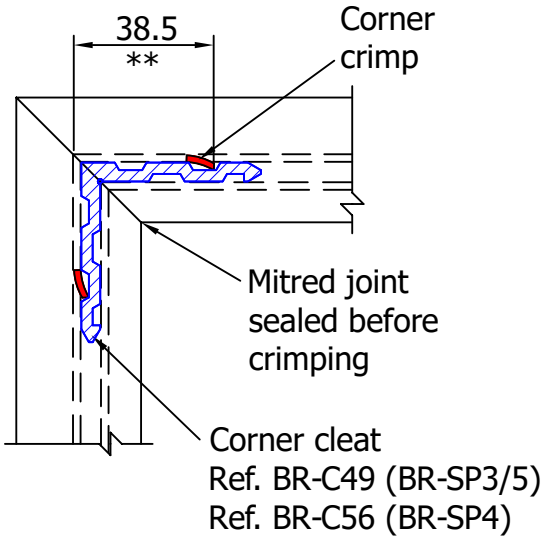


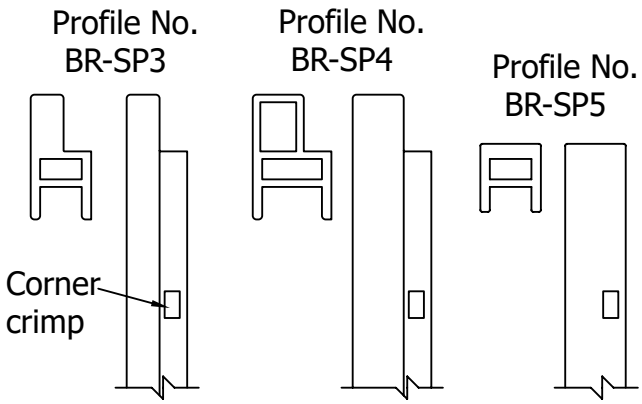


** This dimension to be checked and adjusted if necessary to give a tight mitred joint

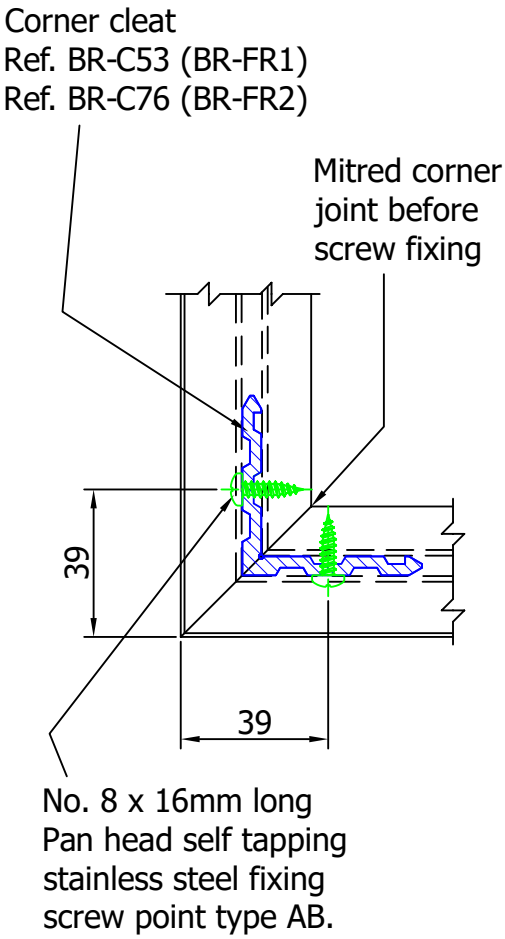


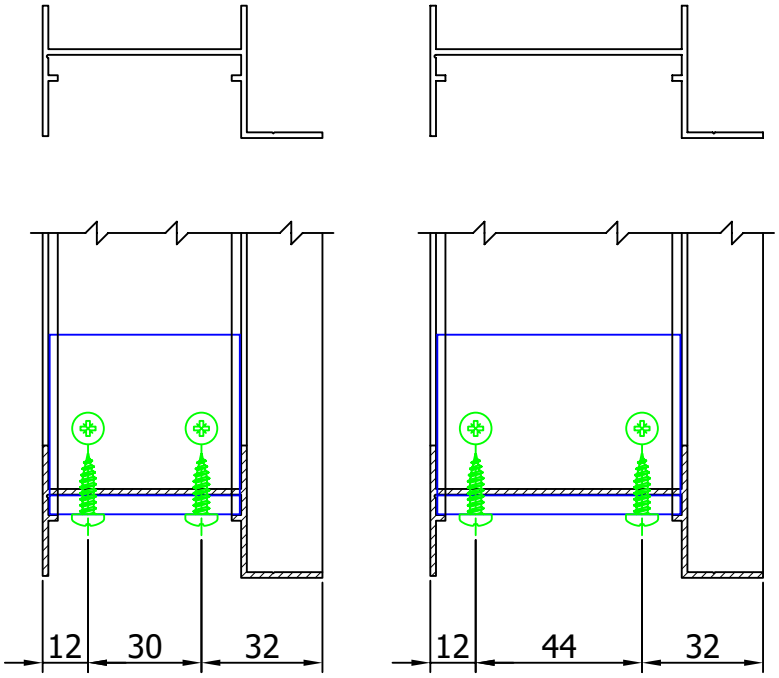


Profile No. BR-FR1 Profile No. BR-FR2

## Fabrication & Assembly - Misc

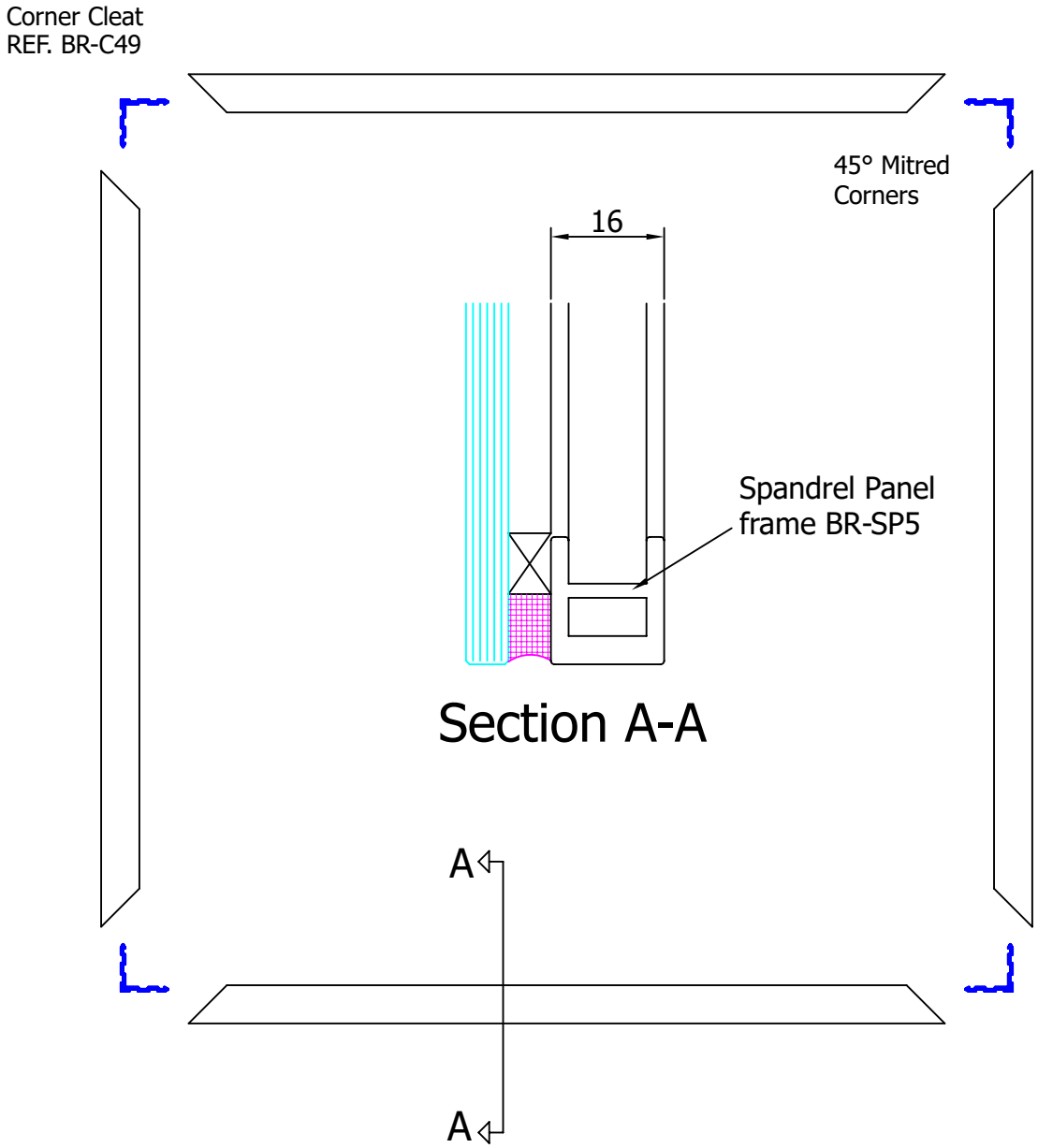


Spandrel frame height bar = transom centres - 21mm

Spandrel frame width bar = mullion centers - 21mm

Glass size = mullion centres - 21mm

Glass size = transom centres - 21mm

## Fabrication & Assembly - Misc

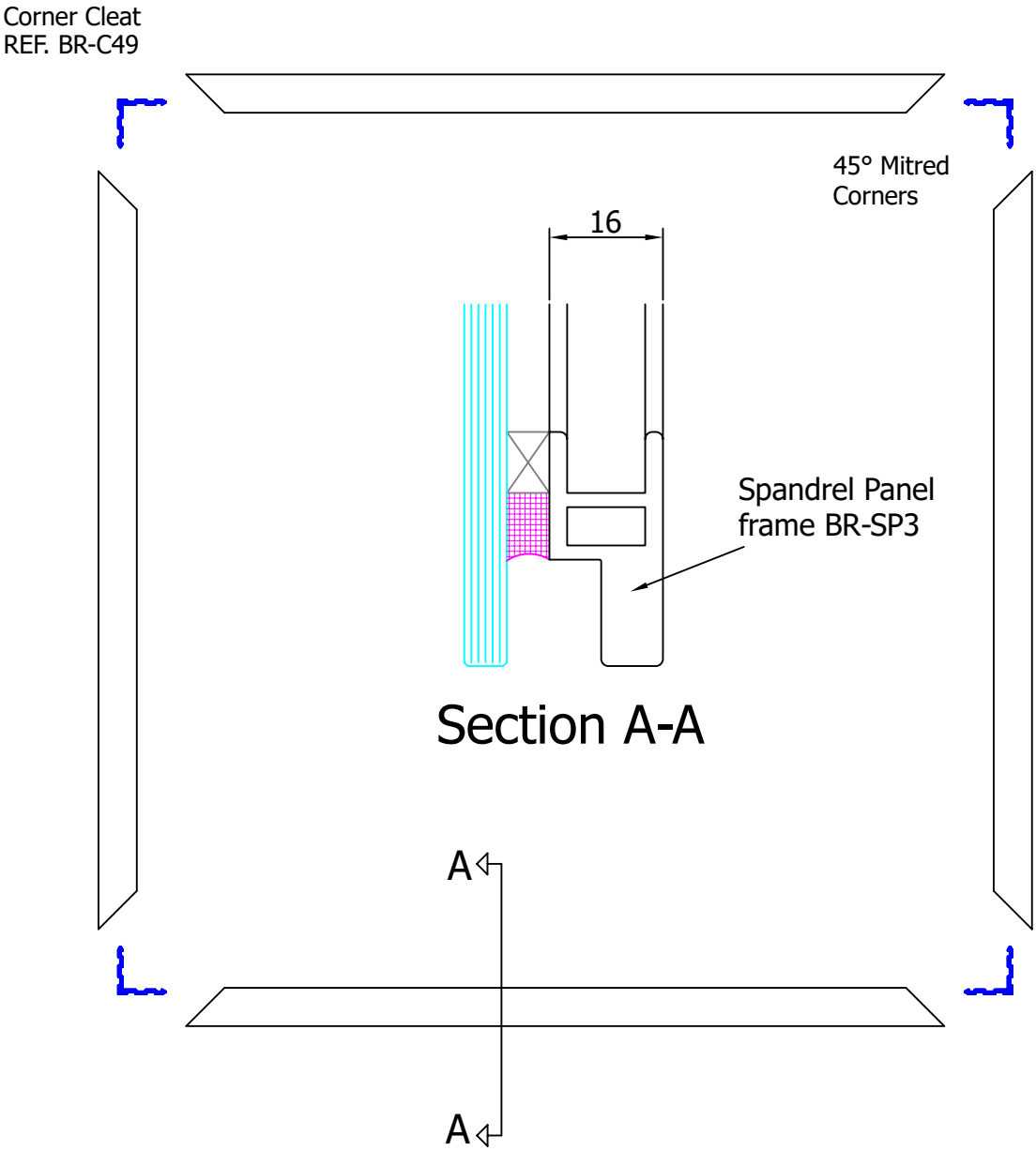


Spandrel frame height bar = transom centres - 21mm

Spandrel frame width bar = mullion centers - 21mm

Glass size = mullion centres - 21mm

Glass size = transom centres - 21mm

## Fabrication & Assembly - Misc

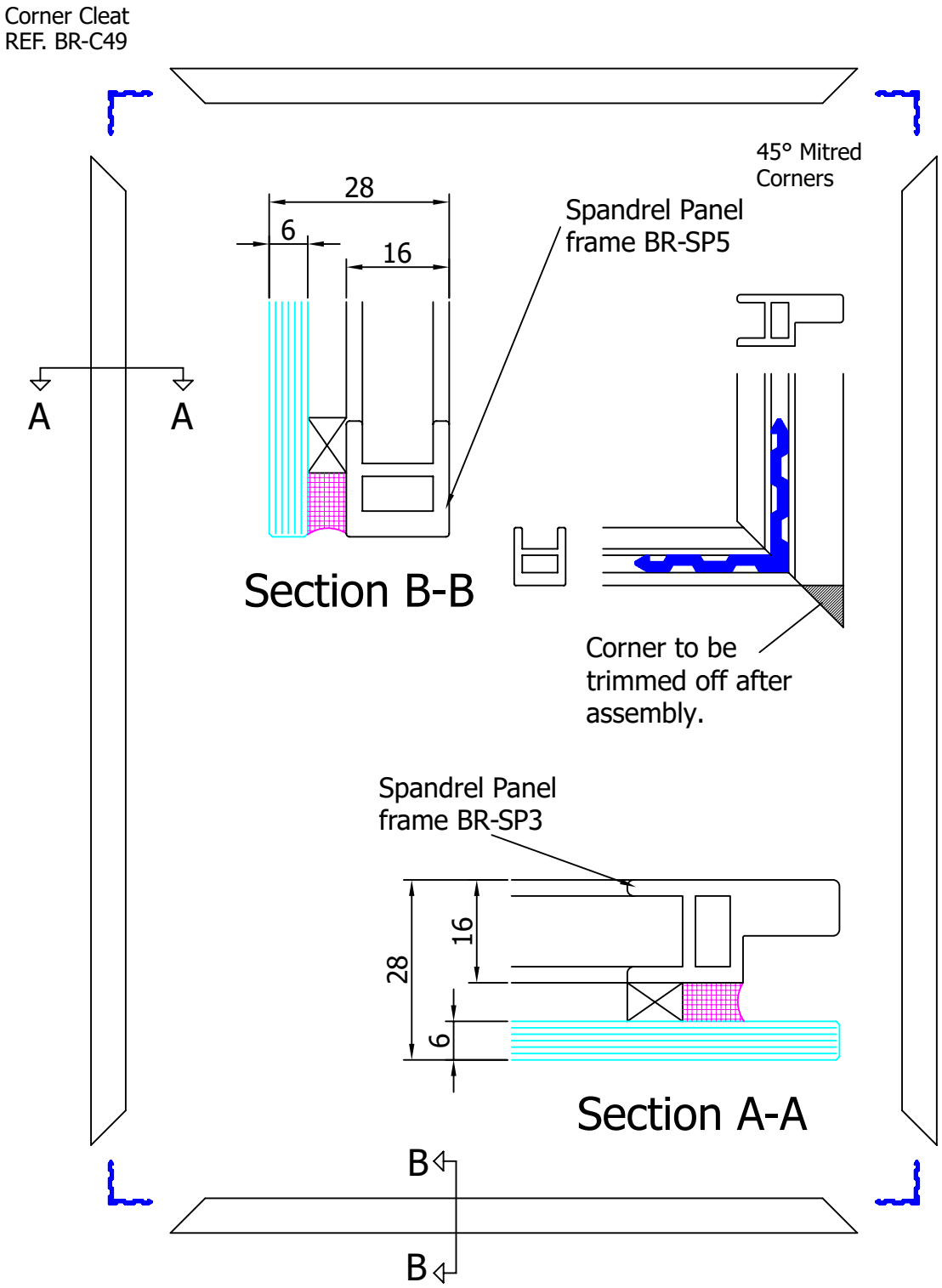


Spandrel frame height bar = transom centres +5mm

Spandrel frame width bar = mullion centers - 47mm

Glass size = mullion centres - 21mm

Glass size = transom centres - 21mm

## Fabrication & Assembly - Misc

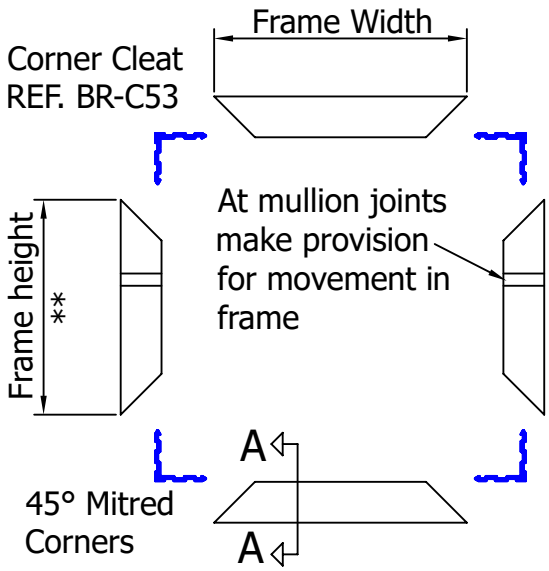


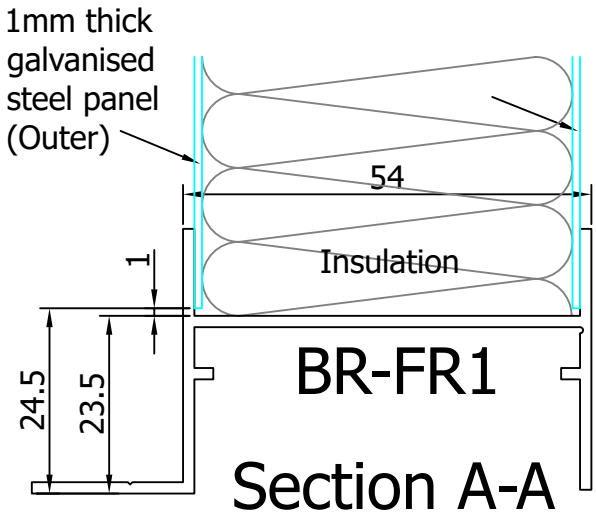


Insulation frame height bar = transom centres - 57mm (mitre ends)
Insulation frame width bar = mullion centers - 57mm (mitre ends)
1mm thk steel panel (Inner) = mullion centres - 106mm (square cut ends)
1mm thk steel panel (Outer) = mullion centres - 106mm (square cut ends)
Corner Cleat (BR-C53) Length = 49.3mm (Cut from BR-15005) (square cut ends)

---

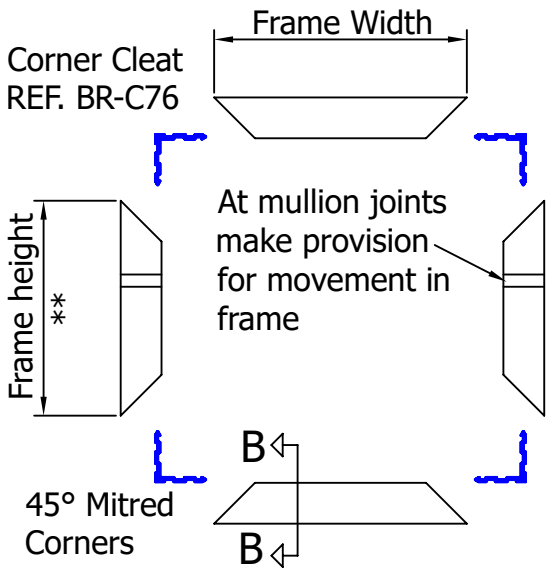


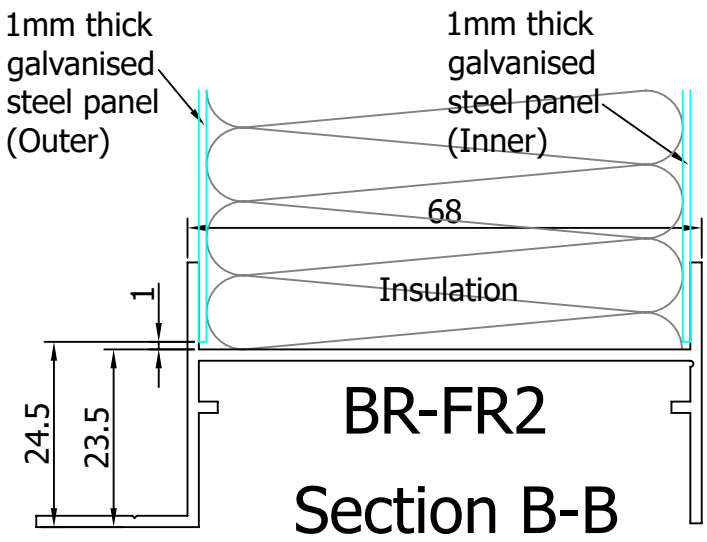


Insulation frame height bar = transom centres - 57mm (mitre ends)
Insulation frame width bar = mullion centers - 57mm (mitre ends)
1mm thk steel panel (Inner) = mullion centres - 106mm (square cut ends)
1mm thk steel panel (Outer) = mullion centres - 106mm (square cut ends)
Corner Cleat (BR-C76) Length = 63.3mm (Cut from BR-15005) (square cut ends)

** Frame height section may require cut-outs to miss curtain wall fixing brackets (see page 73/06 of this manual for prep detail)

## Fabrication & Assembly - Misc

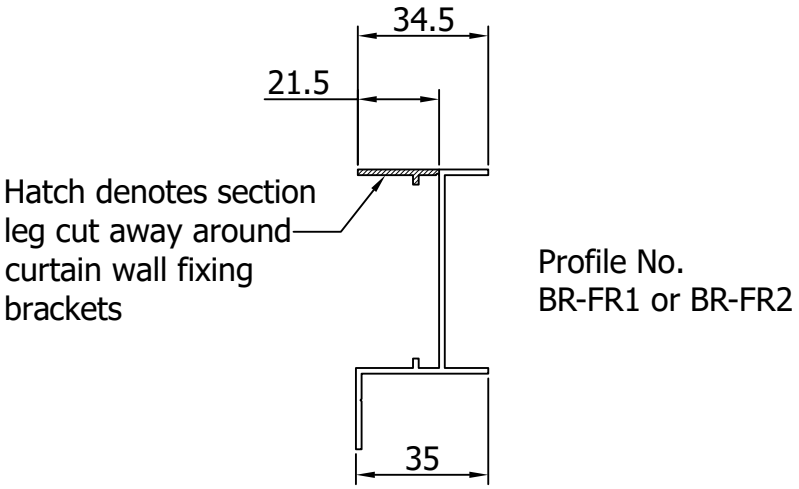


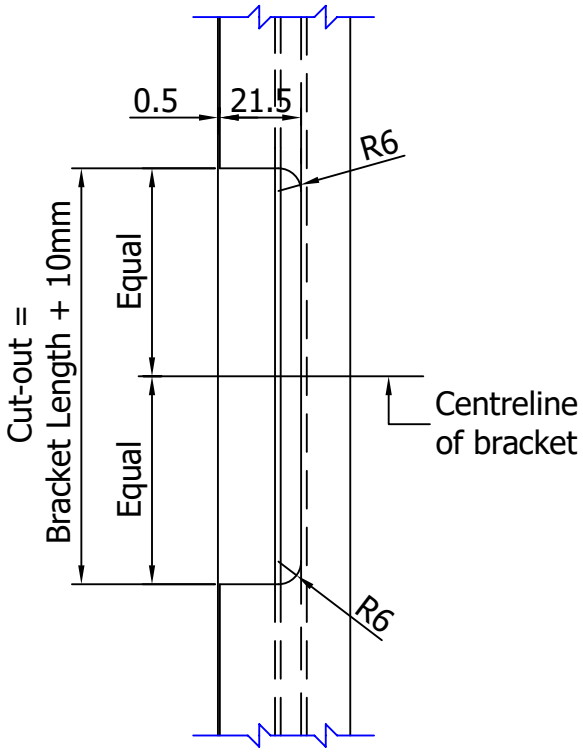

## Fabrication & Assembly - Misc

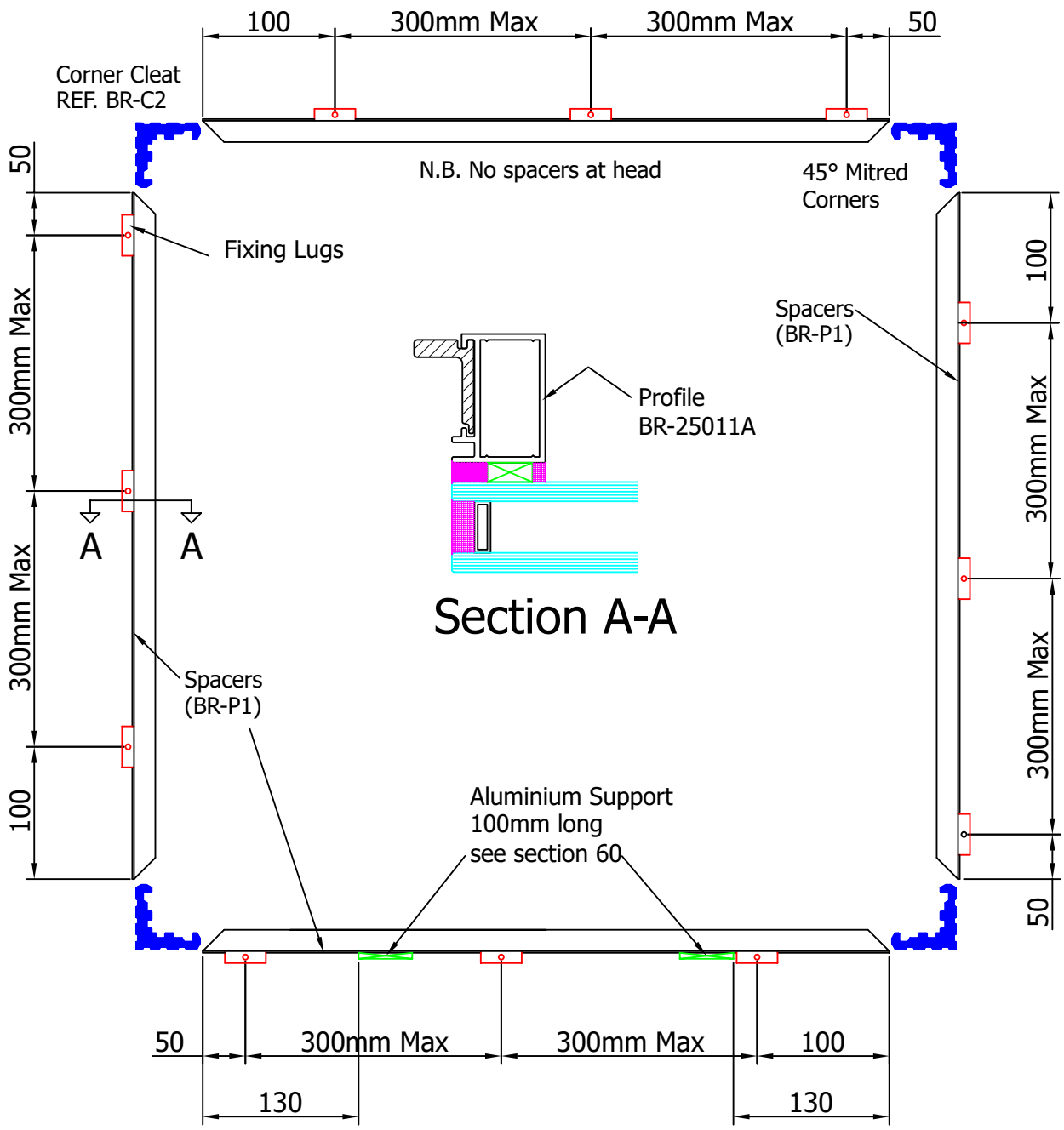


Height bars = Transom centres - 13mm

Width bars = Mullion centres - 13mm

Glass size = mullion/transom centres - 13mm (flush edged)

Corner Cleats - 4 No. x 34.8mm long (REF. BR-C 2)

BR-P1 Spacer - Between fixing lugs

## Fabrication & Assembly - Misc

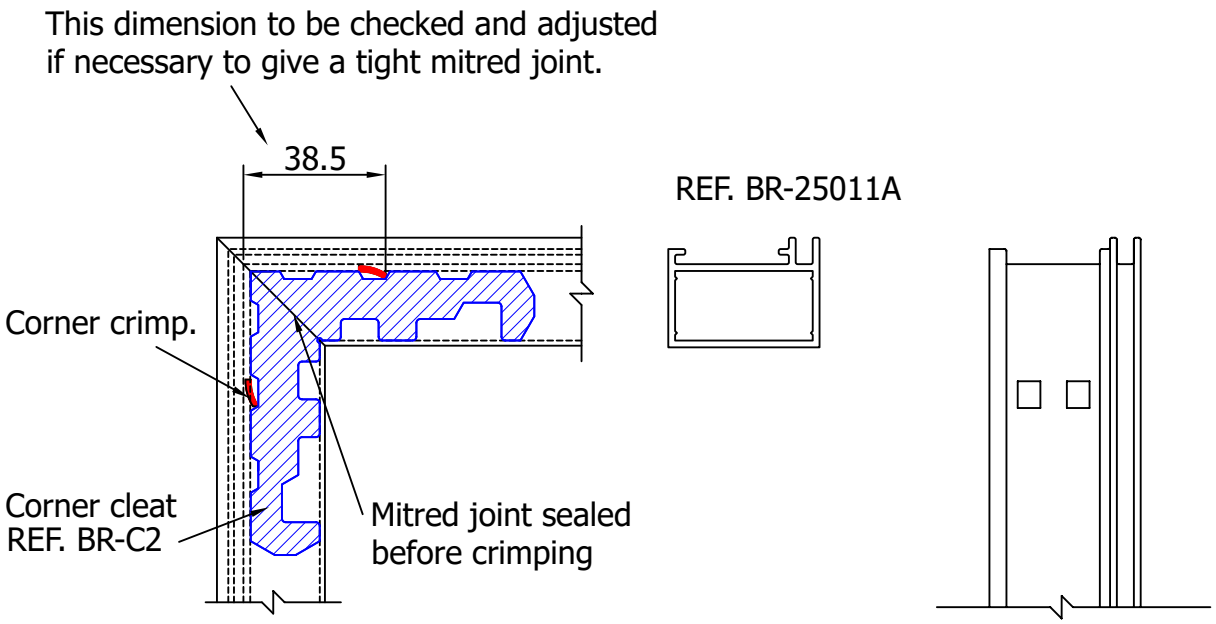

## Fabrication & Assembly - Misc

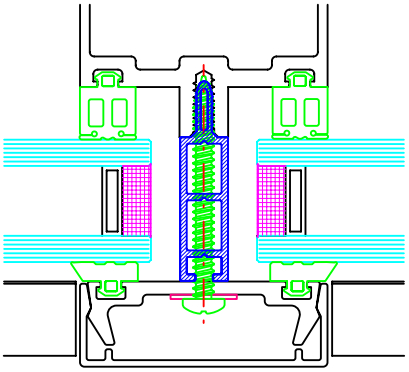

Mullion

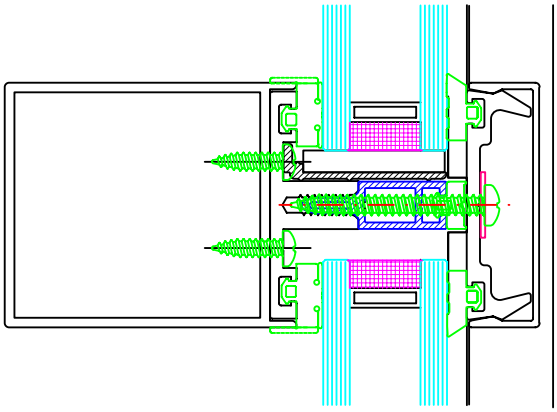

Transom

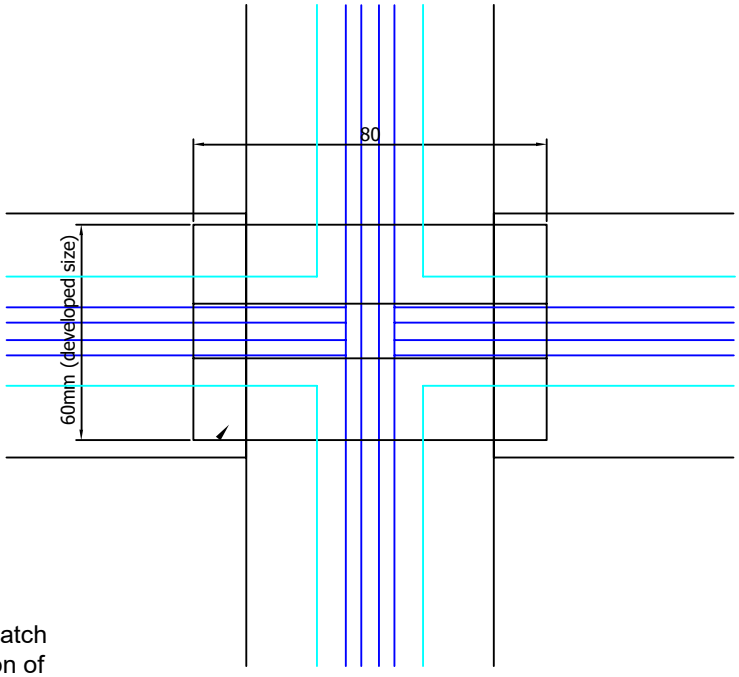


Foil backed butyl patch applied at junction of mullion to transom joints

NOTE; THIS OPTIONAL IS FOR

WEATHER PERFORMANCE OF 600Pa or MORE

## Drainage

* : For details of Glazing Support
see Section 60

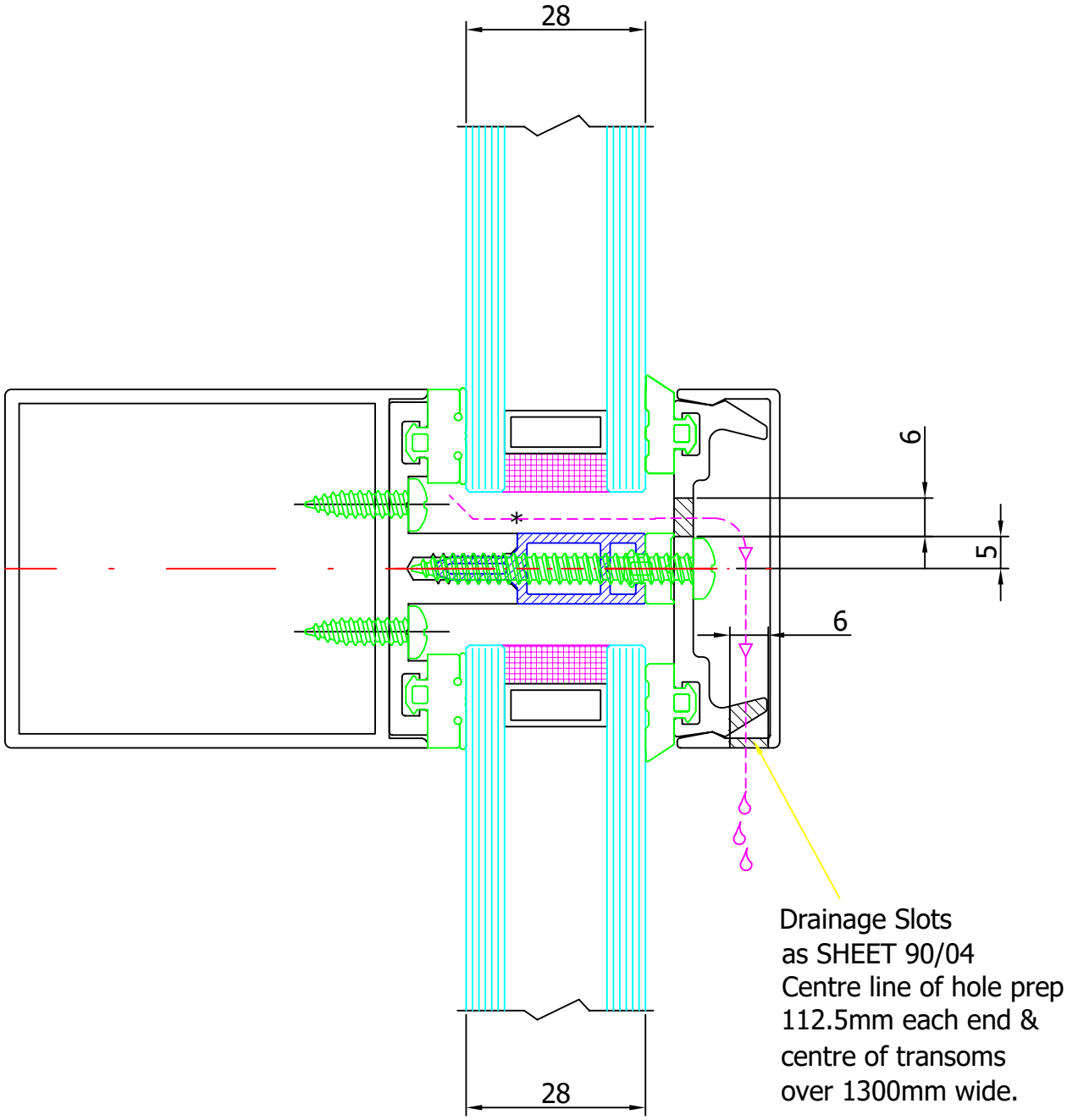

# Drainage

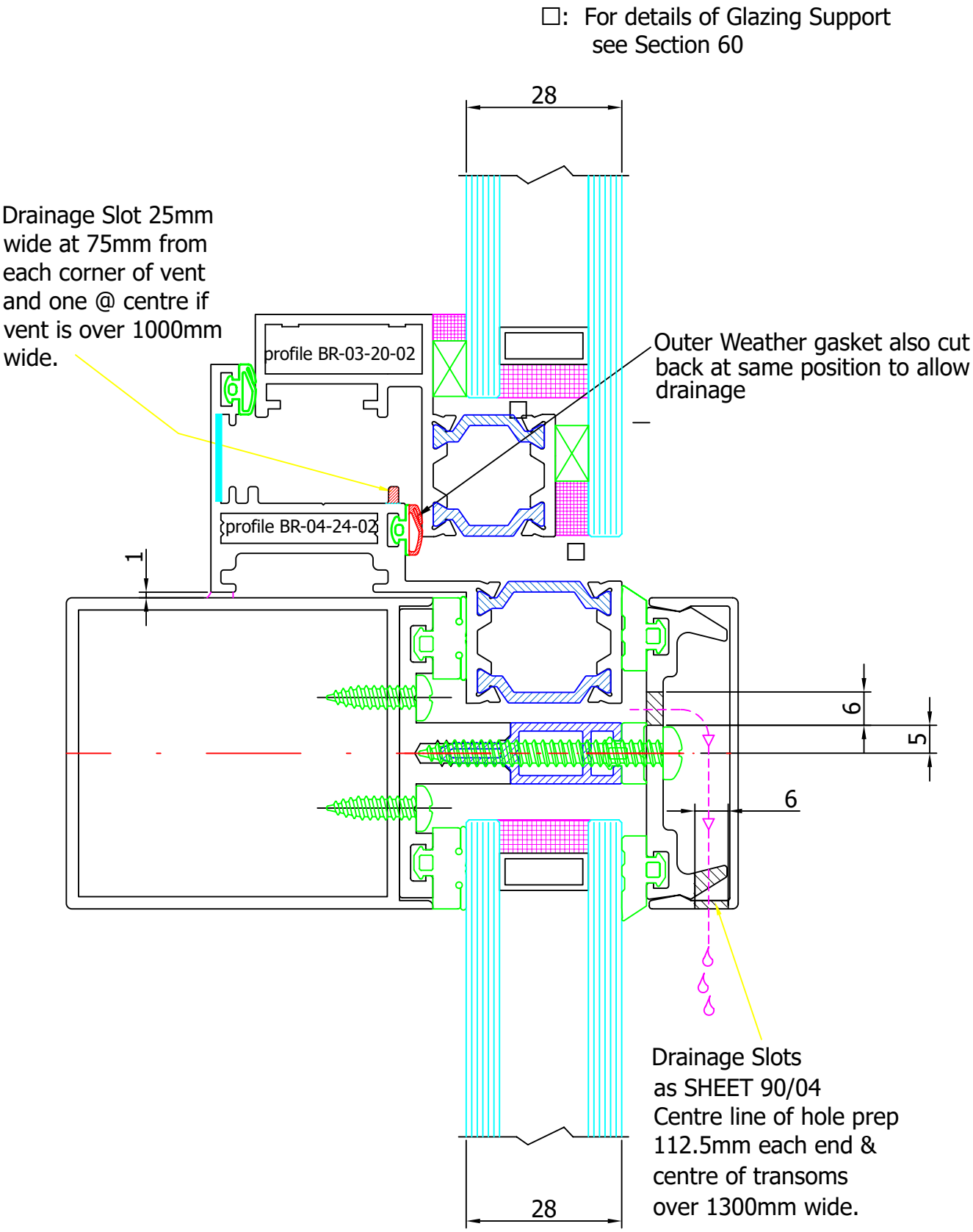
□: For details of Glazing Support see Section 60
28
Drainage Slot 25mm wide at 75mm from each corner of vent and one @ centre if vent is over 1000mm wide.
profile BR-03-20-02
Outer Weather gasket also cut back at same position to allow drainage
profile BR-04-24-02
1
6
5
6
Drainage Slots as SHEET 90/04 Centre line of hole prep 112.5mm each end & centre of transoms over 1300mm wide.
28

## Drainage

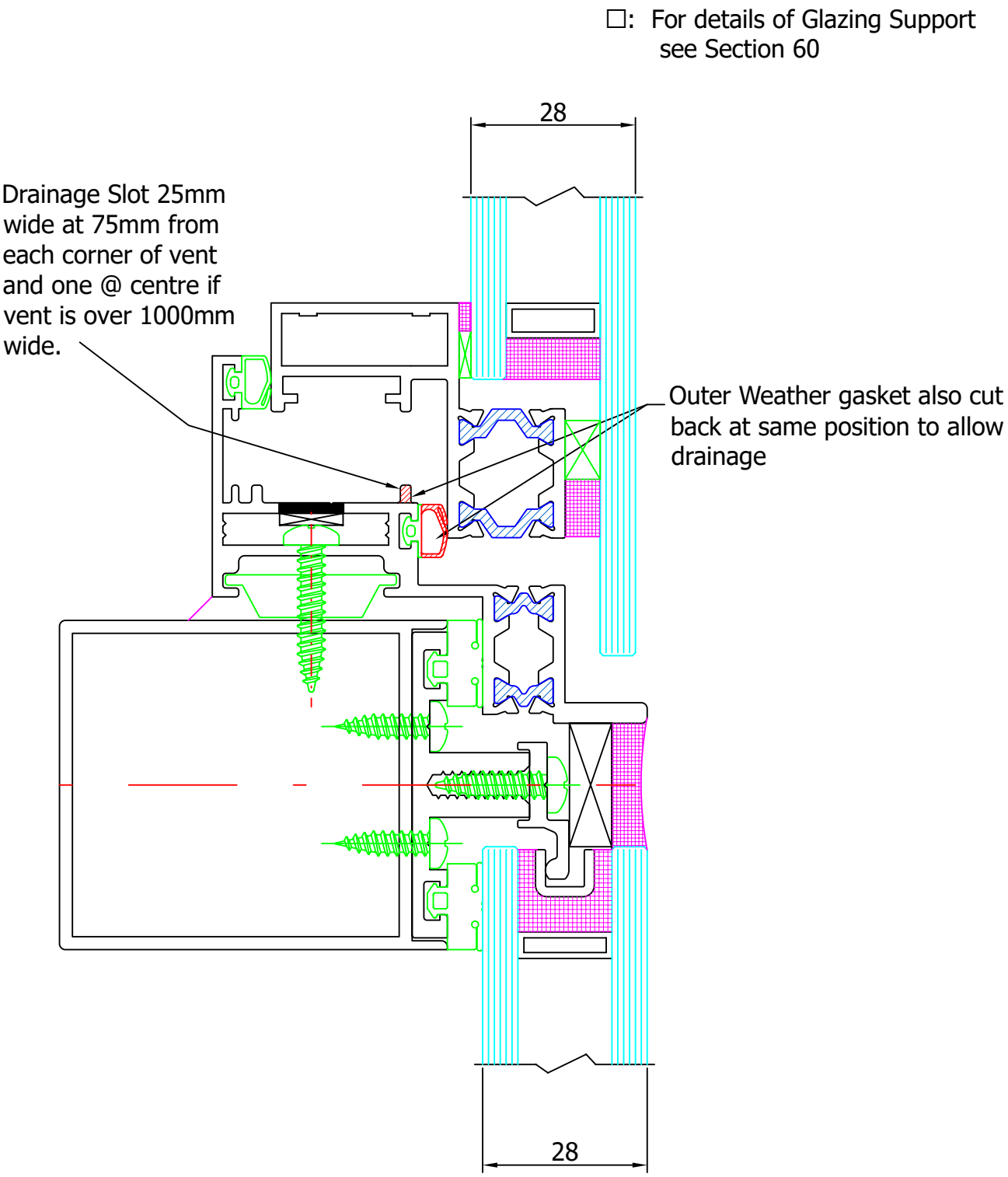
☐: For details of Glazing Support see Section 60
28
Drainage Slot 25mm wide at 75mm from each corner of vent and one @ centre if vent is over 1000mm wide.
Outer Weather gasket also cut back at same position to allow drainage
28

## Drainage

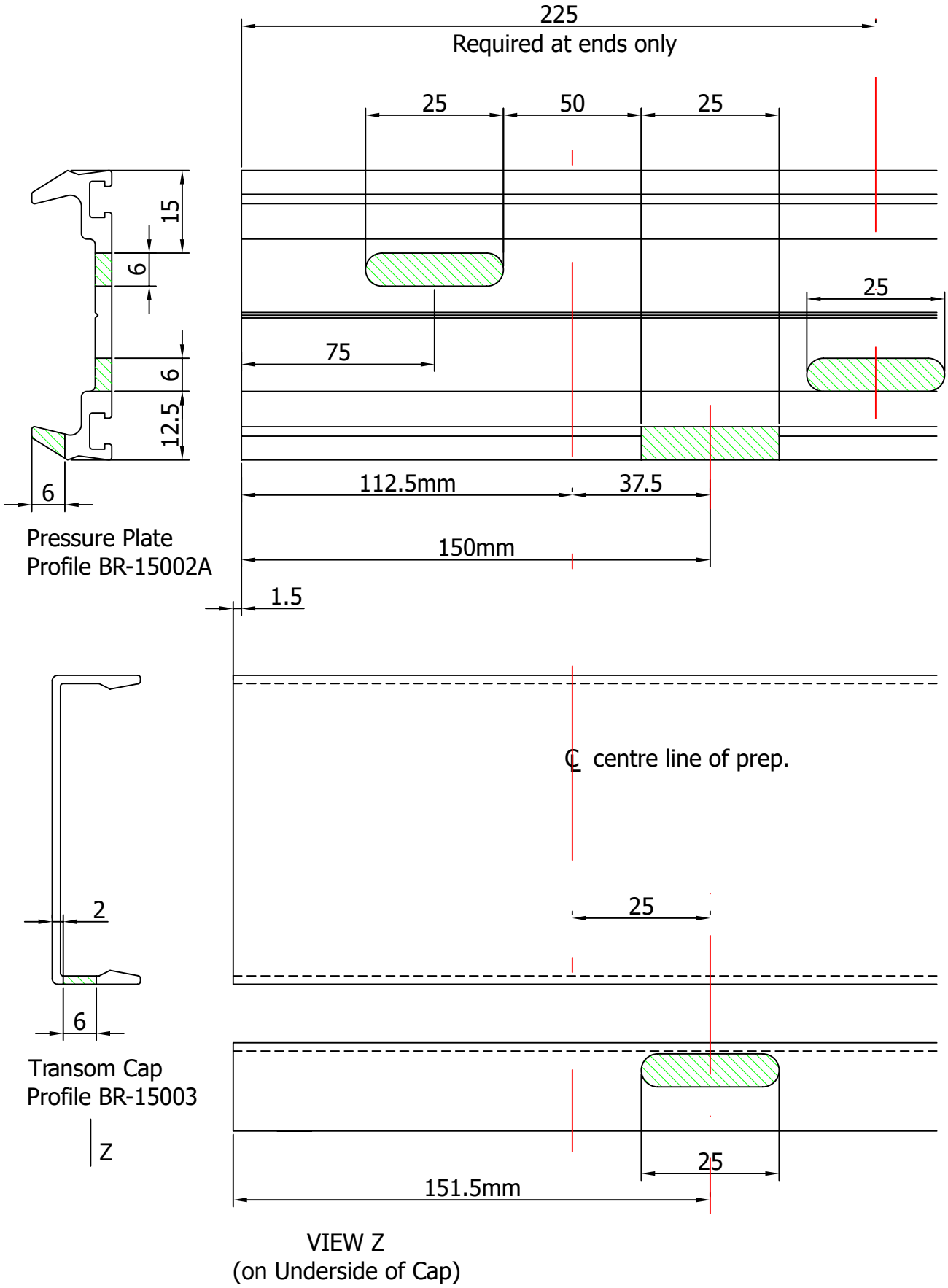
225
Required at ends only
25
50
25
15
6
6
12.5
6
25
75
112.5mm
37.5
150mm
1.5
Pressure Plate
Profile BR-15002A
℄ centre line of prep.
2
25
6
Transom Cap
Profile BR-15003
Z
25
151.5mm
VIEW Z
(on Underside of Cap)

## Drainage

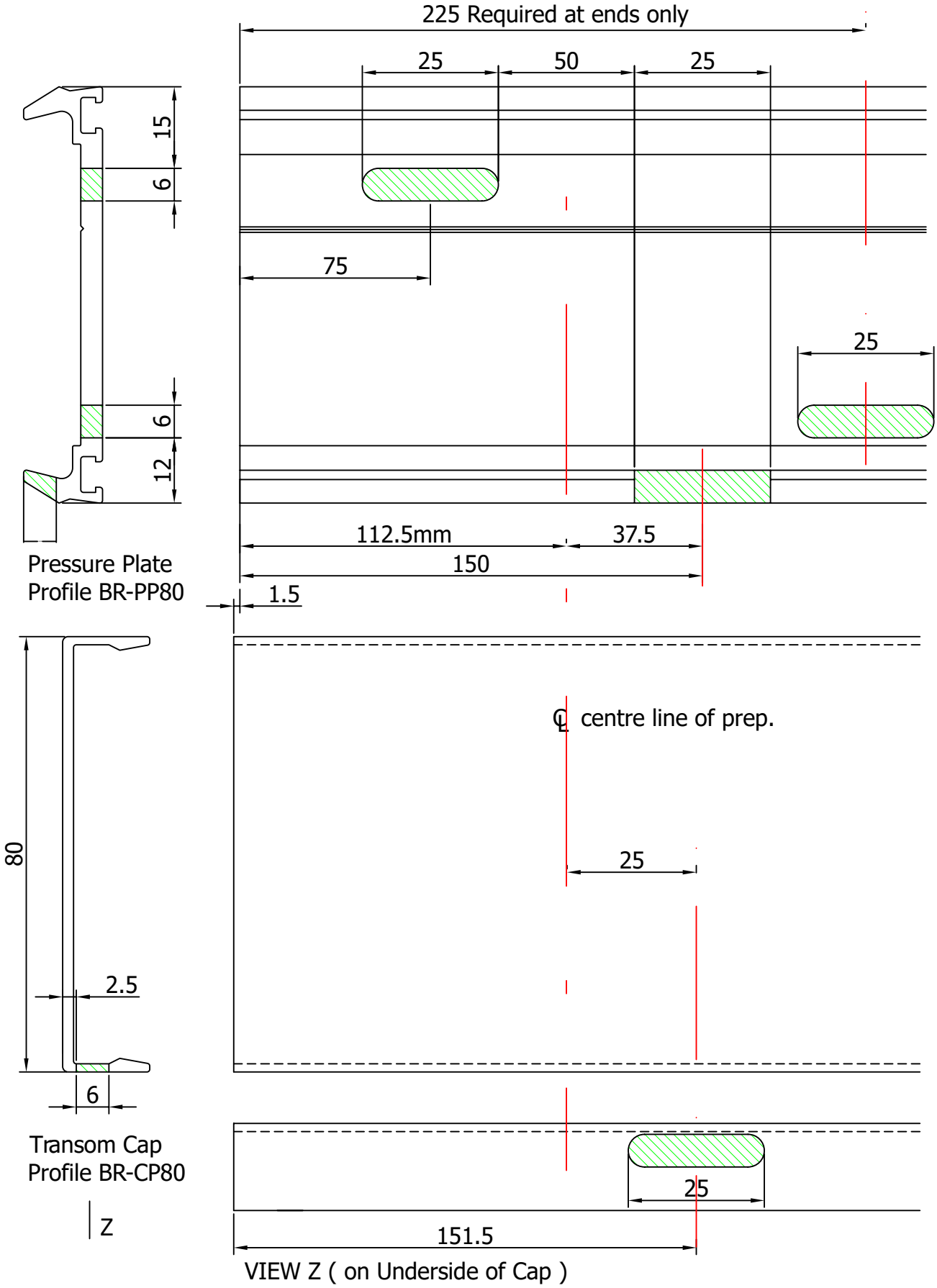
225 Required at ends only
25
50
25
15
6
75
25
6
12
112.5mm
37.5
150
1.5
Pressure Plate
Profile BR-PP80
℄ centre line of prep.
80
25
2.5
6
Transom Cap
Profile BR-CP80
Z
25
151.5
VIEW Z ( on Underside of Cap )

# Drainage

☐: For details of Glazing Support see Section 60

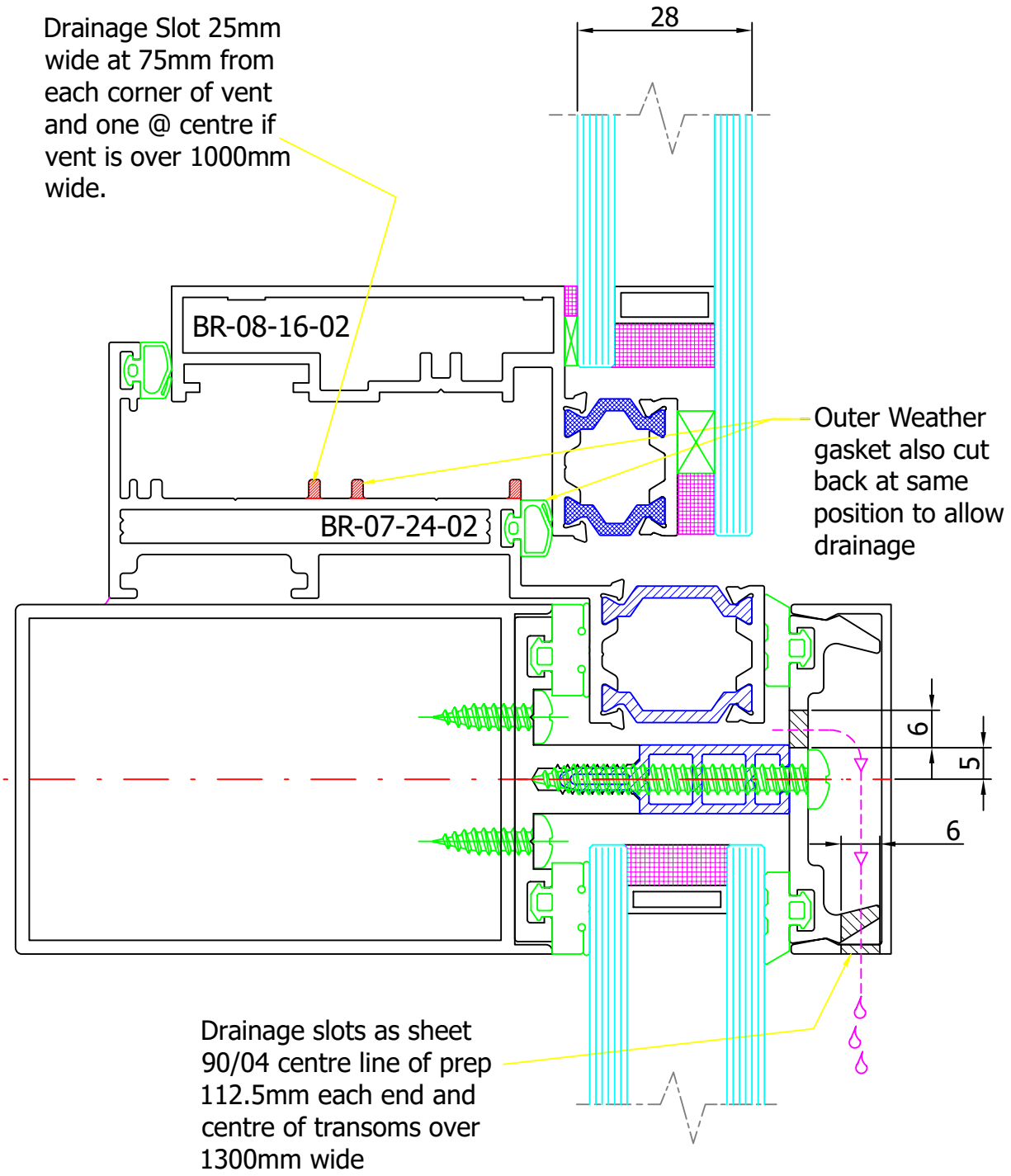

# Drainage

☐: For details of Glazing Support see Section 60

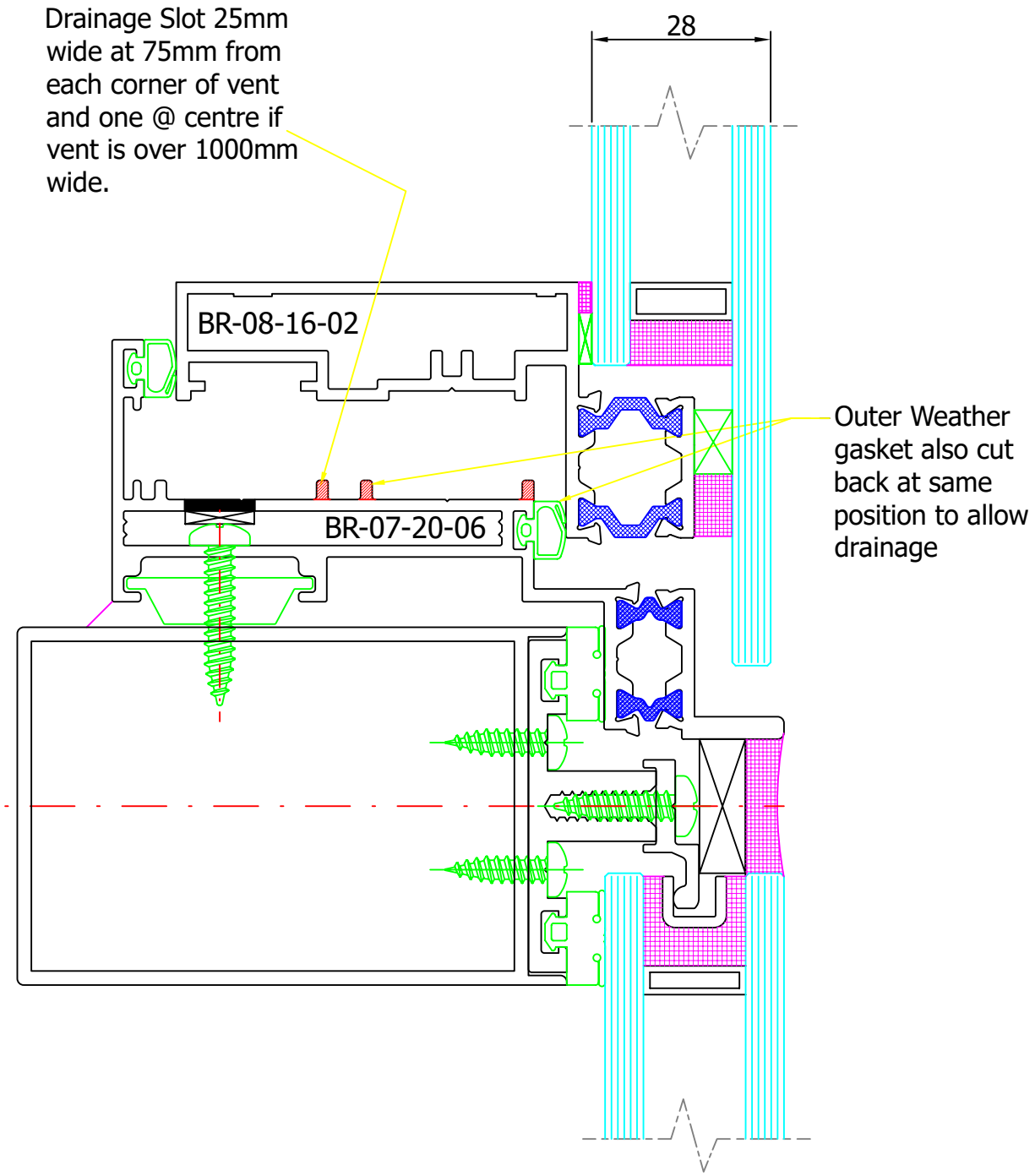

BRITAL

ALUMINIUM SYSTEMS DESIGN

**BRITAL Middle East Aluminium System LLC**
Al Quoz Industrial Area, UAE | 04-3791001
info@brital.ae | BRITAL.AE