BRITAL

ALUMINIUM SYSTEMS DESIGN

/PRE-QUALIFICATION

BRITAL.AE

Table of contents

ABOUT US

Innovative facade solutions. Engineered for global performance.

Brital Ltd originated in the United Kingdom and continues to operate with a strong British foundation. While our design legacy began with a focus on the Gulf region, BRITAL is not solely Middle East-based — our presence extends internationally, with operations designed to support projects across a variety of markets.

From the outset, now BRITAL Middle EAST Aluminium Systems, were developed to meet the specific climatic and construction requirements of the Gulf region. However, our flexible design approach allows for adaptation to global performance standards, ensuring that our façade systems can be tailored to meet regional codes and project-specific needs worldwide.

Over the past twenty-fifive years, BRITAL has significantly expanded its product range — offering complete façade solutions, from louvers, doors and windows to stick glazed. and unitized curtain wall systems. Most of our systems are available in both thermal and non-thermal break.

System innovation remains a key part of our identity. We collaborate closely with a network of approved fabricators to ensure our solutions remain practical, efficient, and responsive to the needs of the markets we serve.

BRITAL systems are exclusively manufactured through licensed regional extruders who meet our strict standards for quality, precision, and consistency. Accessories and gaskets are specified as part of each system and are readily available within the region.

All major BRITAL systems are developed in accordance with CWCT standards and have been independently tested to ensure compliance with BS:EN, ASTM, AAMA, and other globally recognized benchmarks.

While BRITAL originated in the UK, our operations today are regionally focused, with a strong presence in Dubai to support projects with technical guidance, drawing reviews, and façade system consultation across the Middle East and other markets.

BRITAL
ALUMINIUM SYSTEMS DESIGN

Where smart systems meet seamless execution

REGIONAL SOLUTIONS

Our systems are meticulously designed from the ground up to meet the unique climates and conditions of the region, with a global focus ensuring their effectiveness in diverse environments worldwide.

ENERGY-EFFICIENT SOLUTIONS

Advanced thermal breaks and insulation options optimize energy efficiency, reducing costs and enhancing sustainability.

WEATHER-RESISTANT DURABILITY

Built to endure—our systems resist corrosion and withstand even the harshest weather conditions for long-lasting performance.

STEAMLINED-INSTALLATION AND CUSTOMIZATION

Efficient installation with personalized solutions—tailored to meet your project's unique needs.

COST EFFICIENCY

Smart investments in our durable, low-maintenance, and energy-efficient systems lead to long-term savings and reduced operational costs.

EXPERTISE ON DEMAND

From design consultation to post-sales support, our specialists are with you every step of the way to ensure smooth and successful project delivery.

BUILT WITH INNOVATION

Engineered for performance, our advanced aluminum systems boost efficiency across construction and industrial applications.

QUALITY WITHOUT COMPROMISE

We meet and exceed global standards to deliver reliable, high-performance systems you can trust.

CONFIDENCE, GUARANTEED

Backed by a 10-year system warranty and 5-year accessory coverage, our commitment to quality gives you peace of mind.

BEYOND THE BENCHMARK

Engineered to **CWCT** standards, our systems surpass **ASTM**, **AAMA**, and **BS:EN** requirements for superior performance.

SYSTEM OVERVIEW

CW-56

BRITAL Curtain Wall System

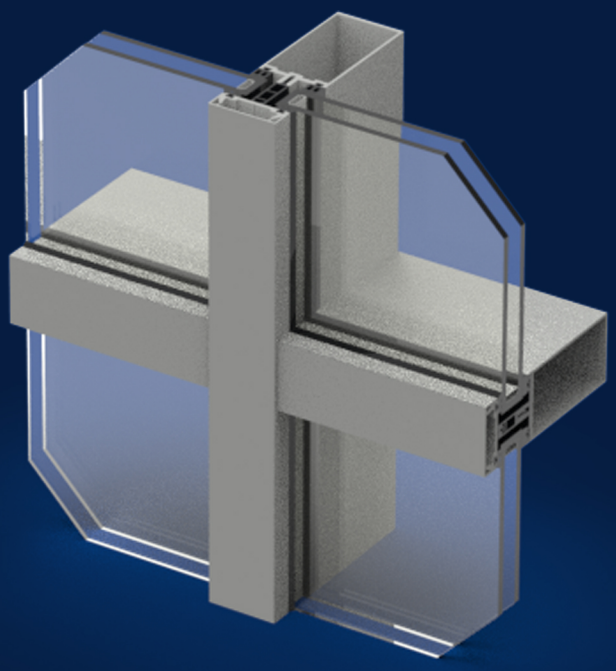

CG-4-56

4 Sided Fully Capped Curtain Walling System

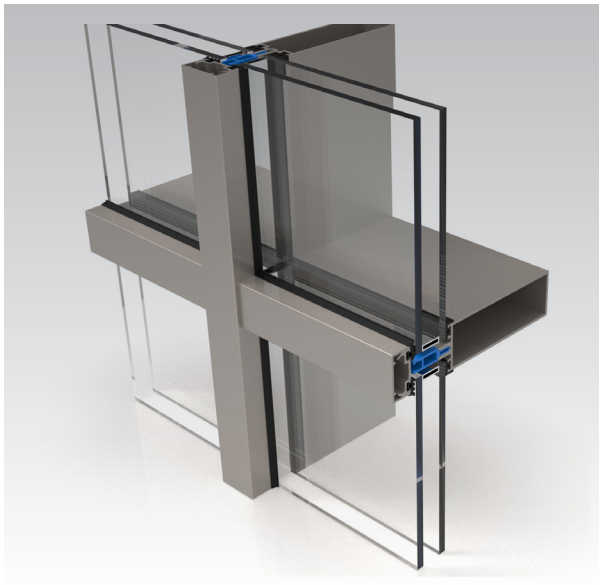

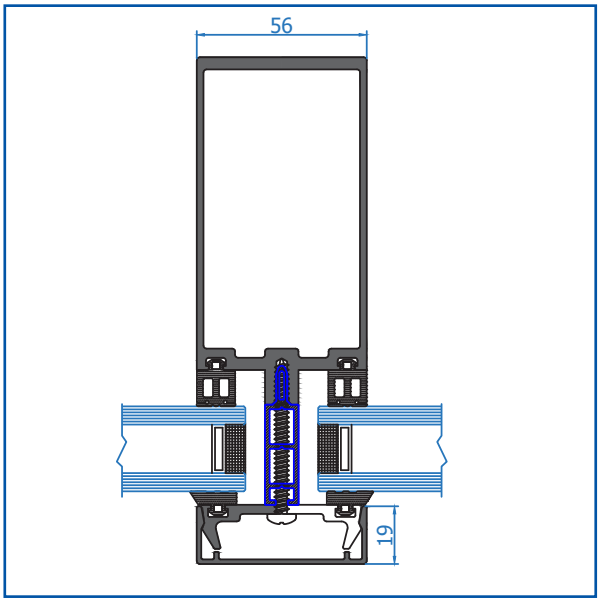

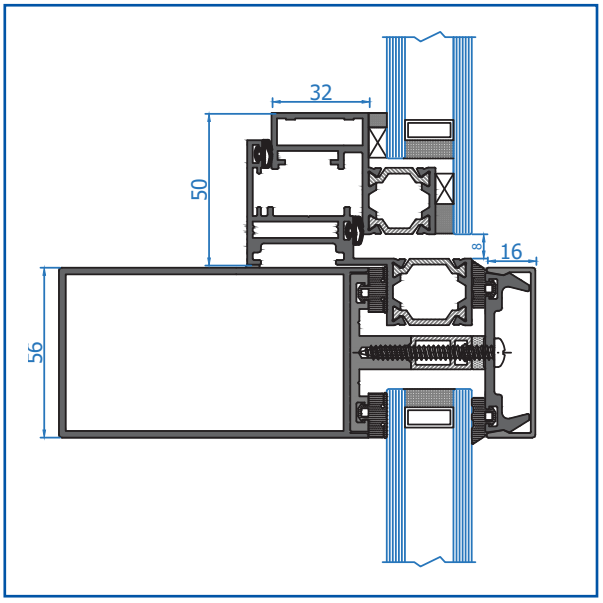

Key Features

SIZE

- Profile width only 56mm.
- Profile depths from 43mm to 200mm.

PERFORMANCE

- Thermal performance can achieve Ucw of 1.6 W/m2/K.
- Single or Double glazed spandrel panels, aluminum.

DISCOVER MORE
ON OUR WEBSITE

CG-4-56

4 Sided Frameless Structurally Glazed

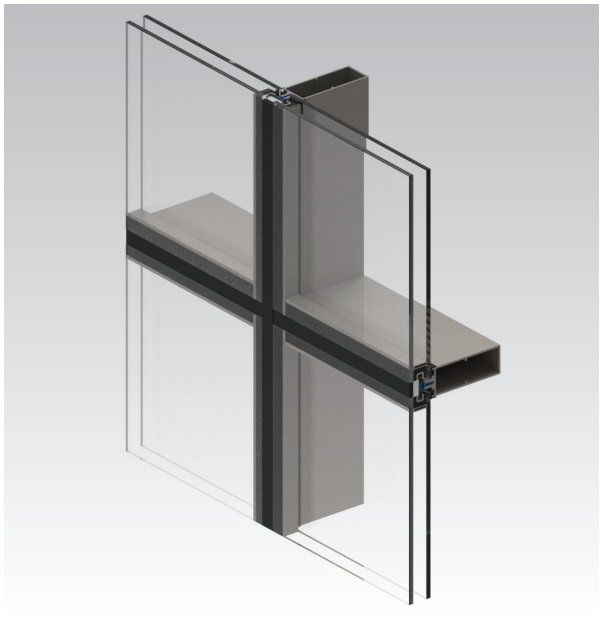

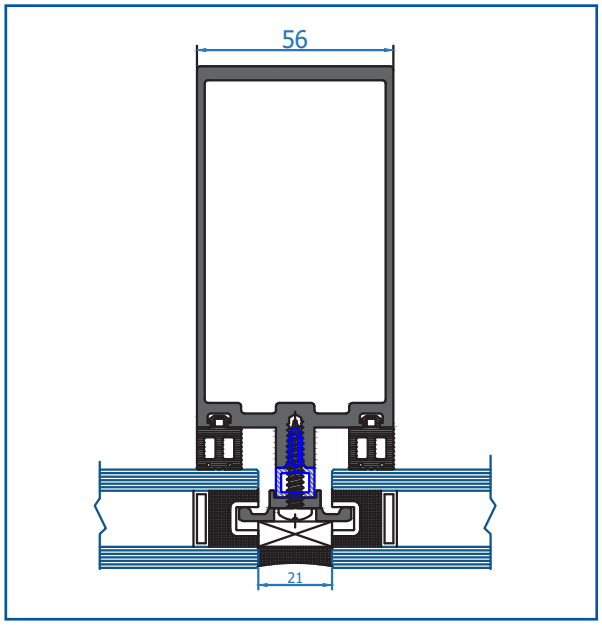

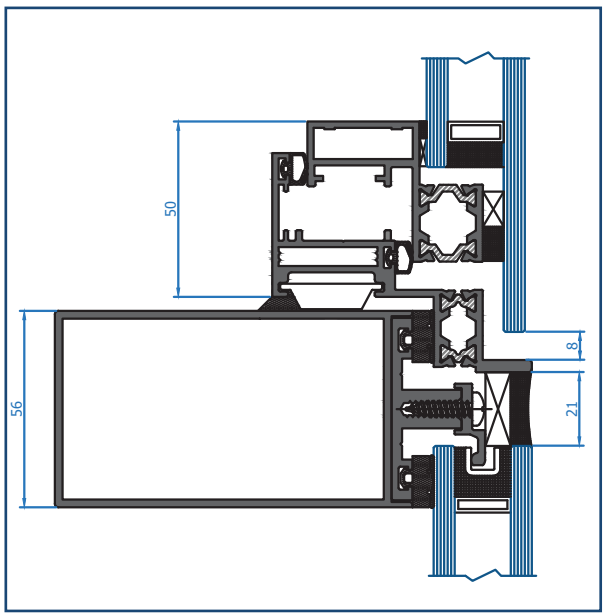

Key Features

SIZE

- Profile width only 56mm.
- Profile depths from 43mm to 200mm.

PERFORMANCE

- Thermal performance can achieve Ucw of 1.6 W/m2/K.
- Single or Double glazed spandrel panels, aluminum.

DISCOVER MORE ON OUR WEBSITE

CG-4-56

Corner Solution

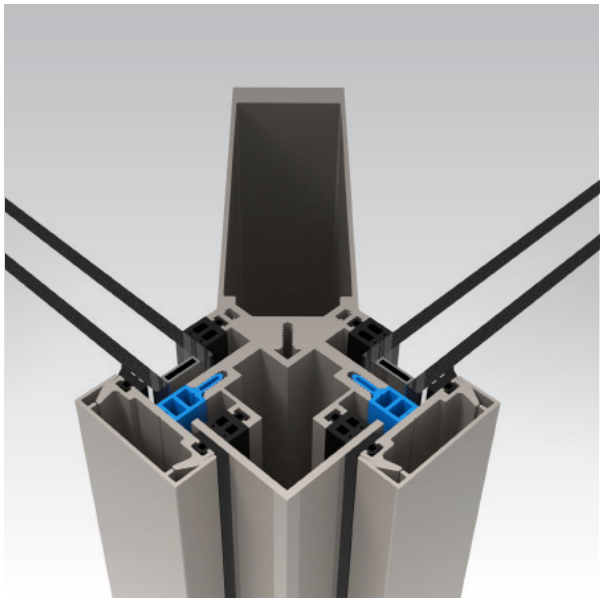

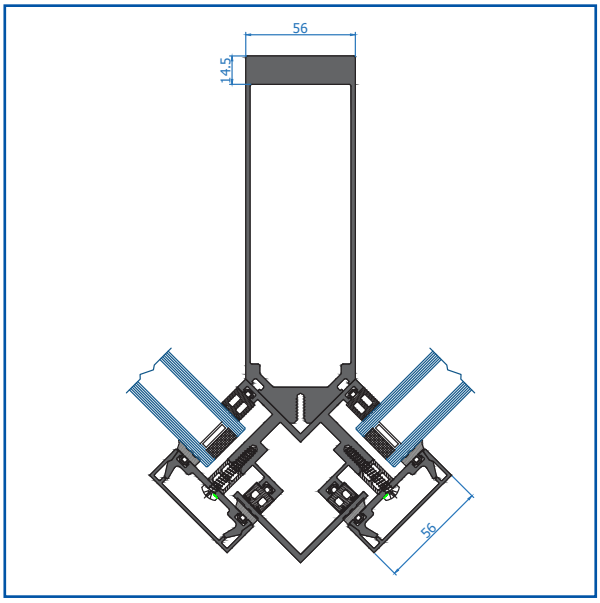

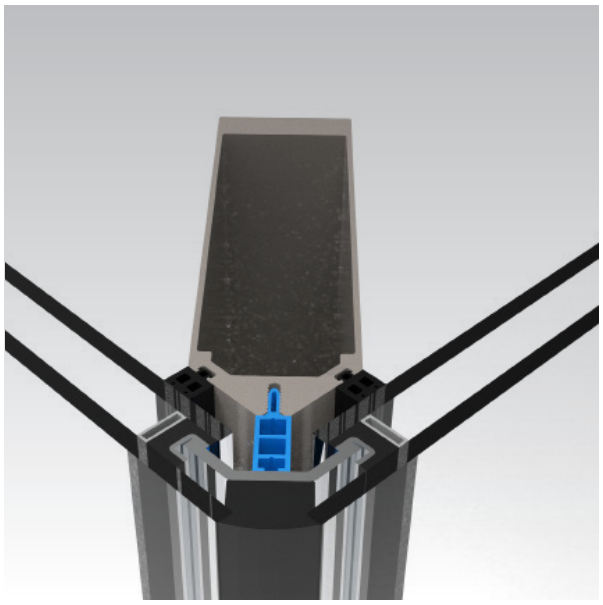

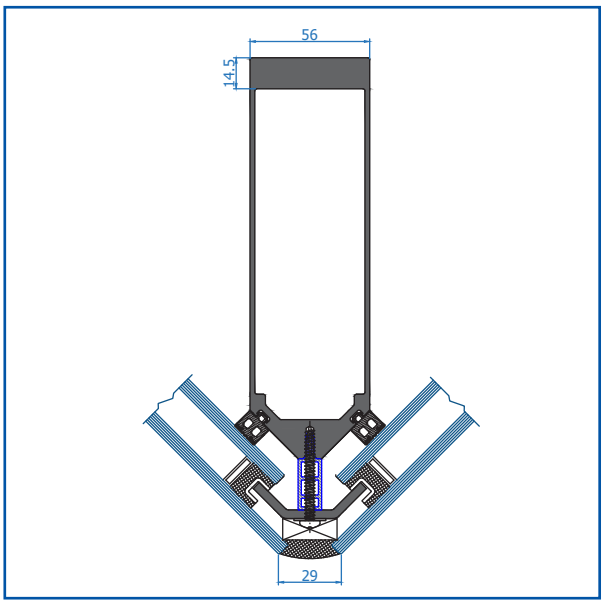

Key Features

SIZE

- Profile width only 56mm.
- Profile depths from 43mm to 200mm.

PERFORMANCE

- Thermal performance can achieve Ucw of 1.6 W/m2/K.
- Single or Double glazed spandrel panels, aluminum.

DISCOVER MORE ON OUR WEBSITE

CG-4-56

Corner Solution

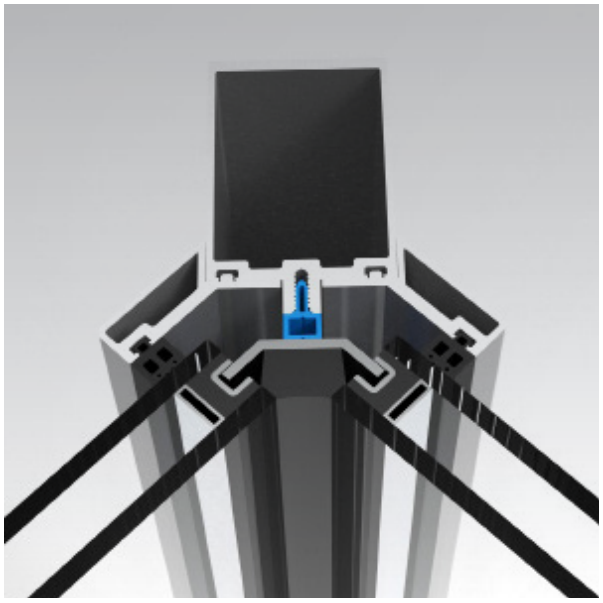

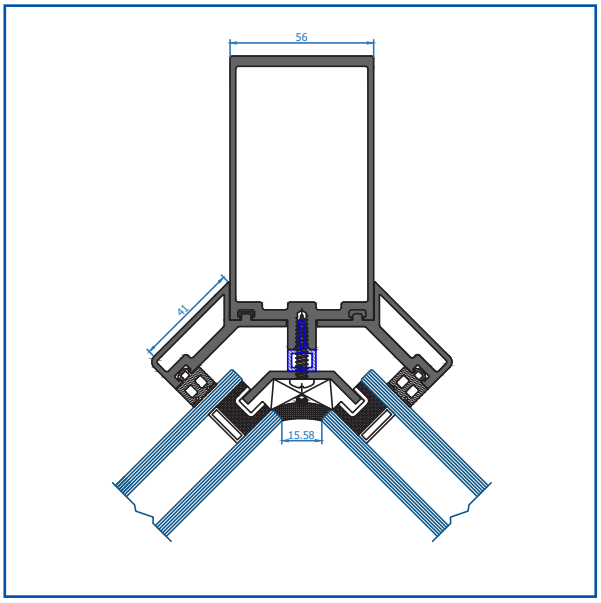

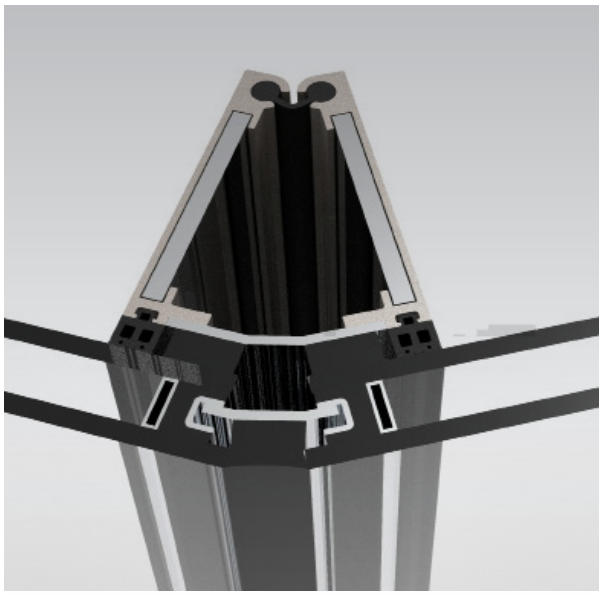

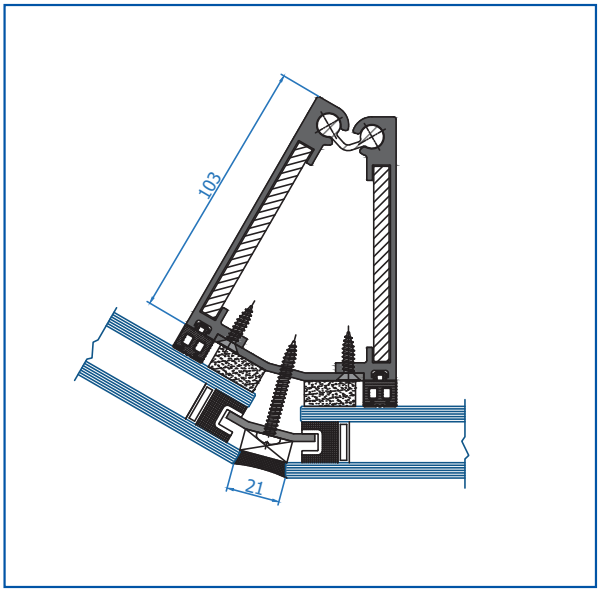

Key Features

SIZE

- Profile width only 56mm.
- Profile depths from 43mm to 200mm.

PERFORMANCE

- Thermal performance can achieve Ucw of 1.6 W/m2/K.
- Single or Double glazed spandrel panels, aluminum.

DISCOVER MORE ON OUR WEBSITE

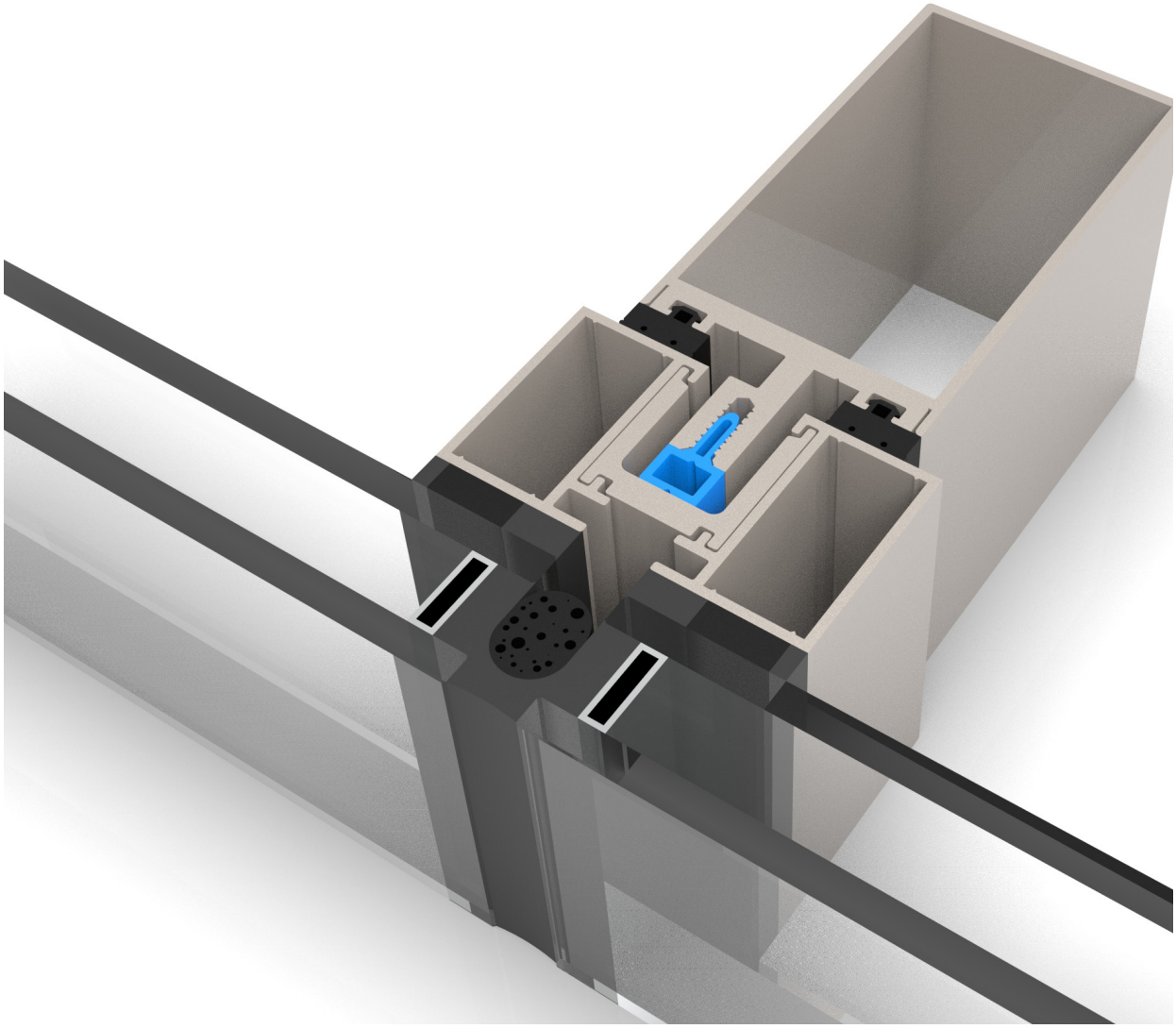

CW-35

BRITAL Curtain Wall System

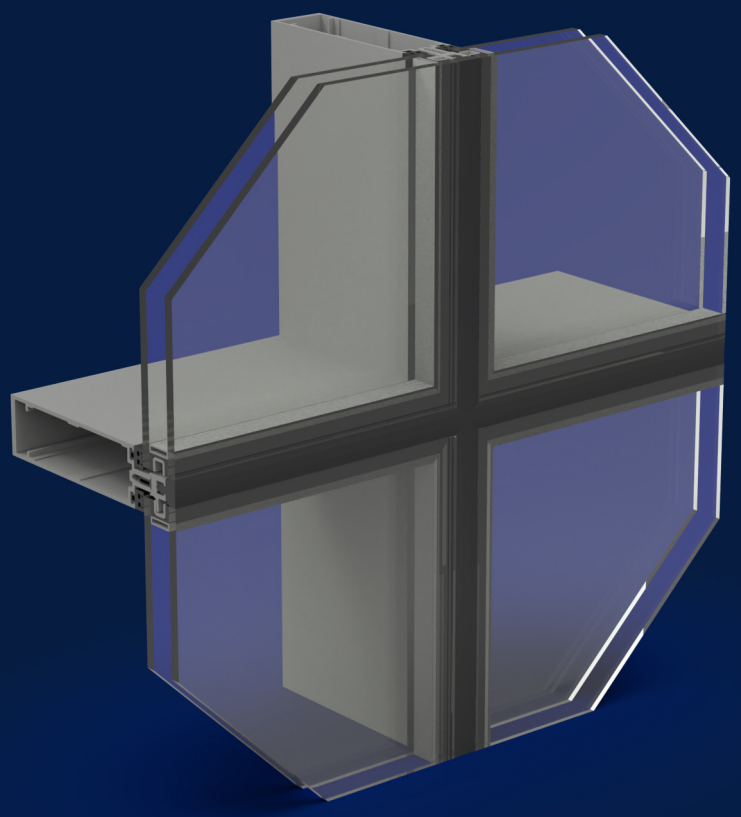

CG-4-35

4 Sided Fully Capped Curtain Wall System

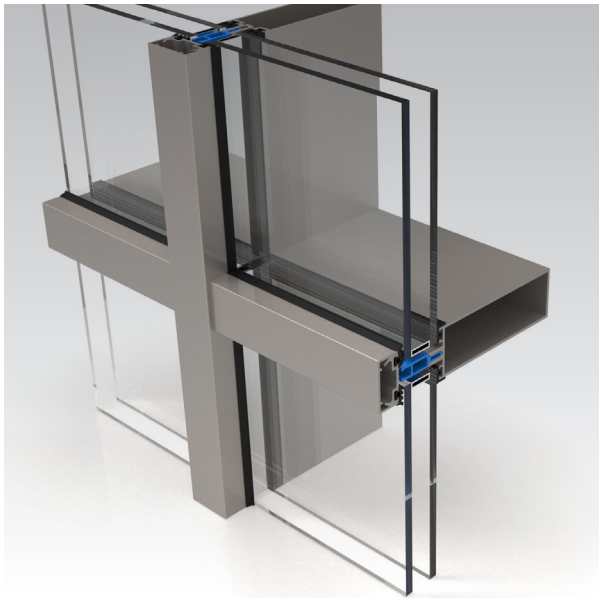

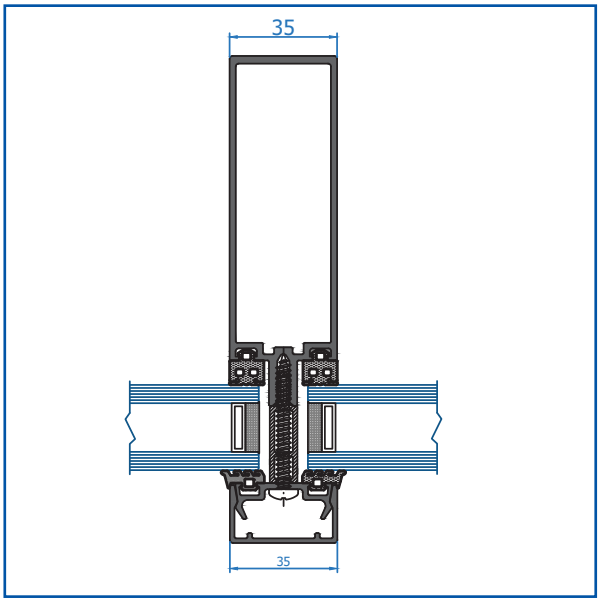

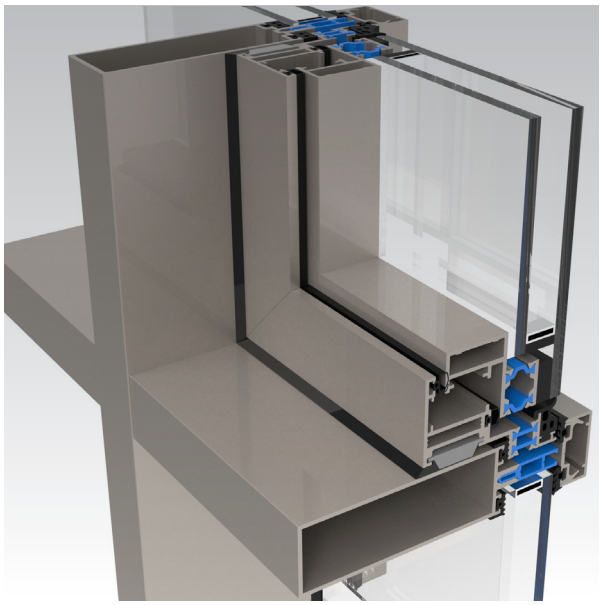

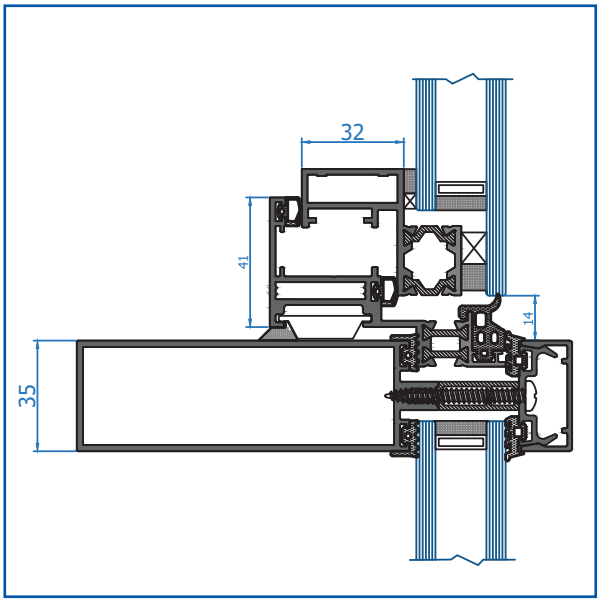

Key Features

SIZE

- Profile width only 35mm.
- Profile depths from 80mm to 165mm.

PERFORMANCE

- Glass infill thickness up to 32mm.

DISCOVER MORE ON OUR WEBSITE

CG-4-35

4 Sided Frameless Structurally Glazed

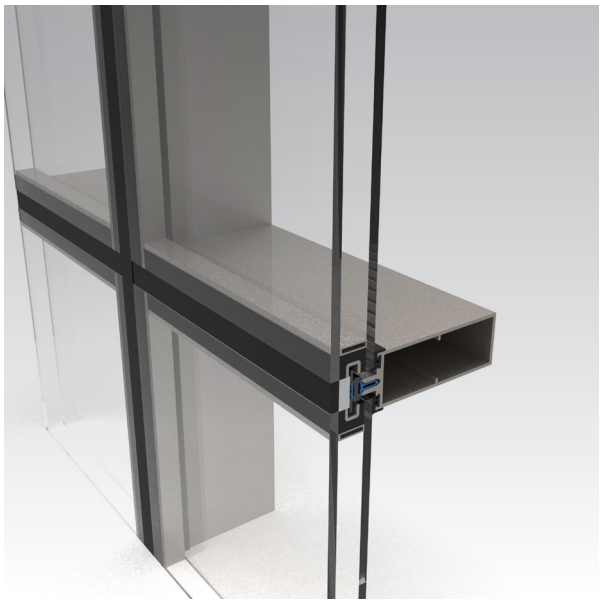

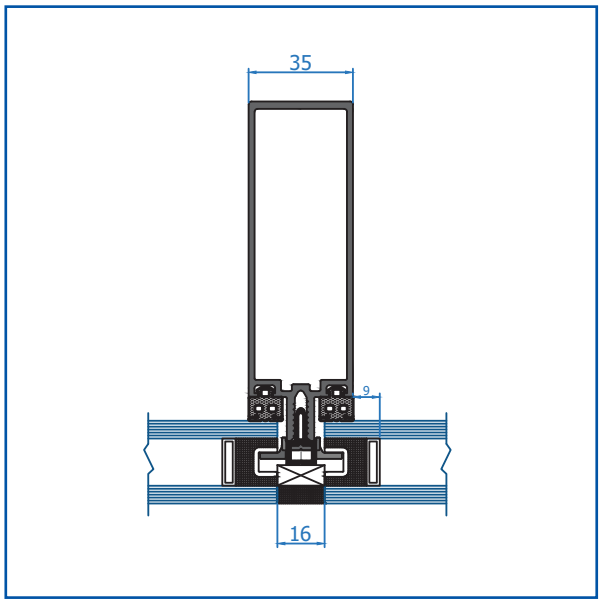

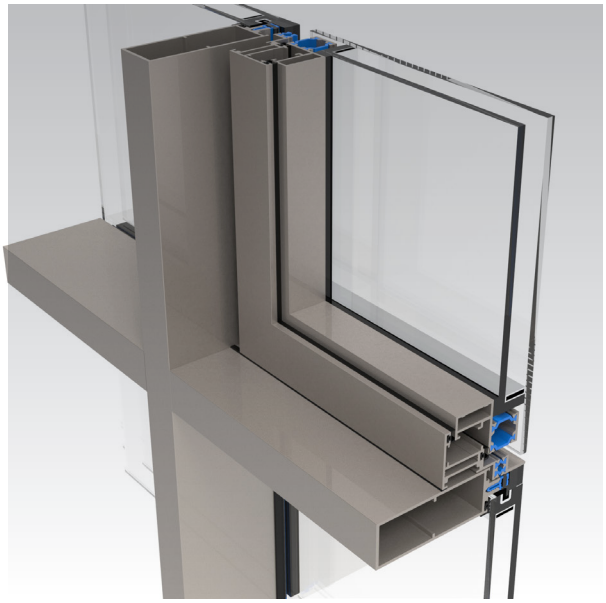

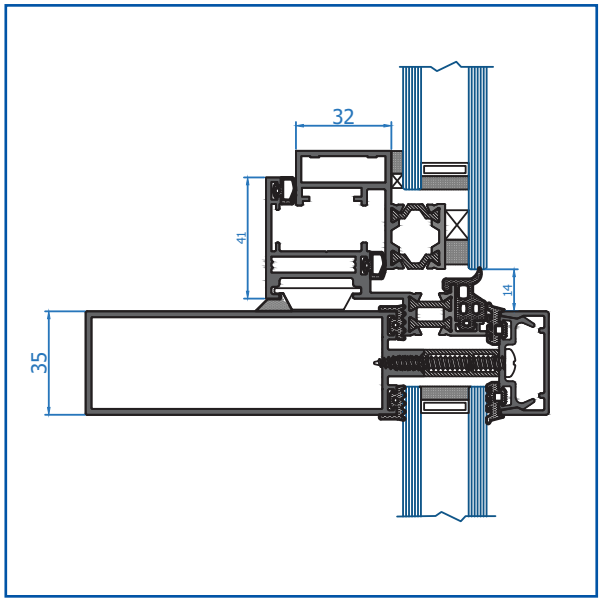

Key Features

SIZE

- Profile width only 35mm.
- Profile depths from 80mm to 165mm.

PERFORMANCE

- Glass infill thickness up to 32mm.

DISCOVER MORE
ON OUR WEBSITE

UN-4-76-SG

BRITAL Curtain Wall System

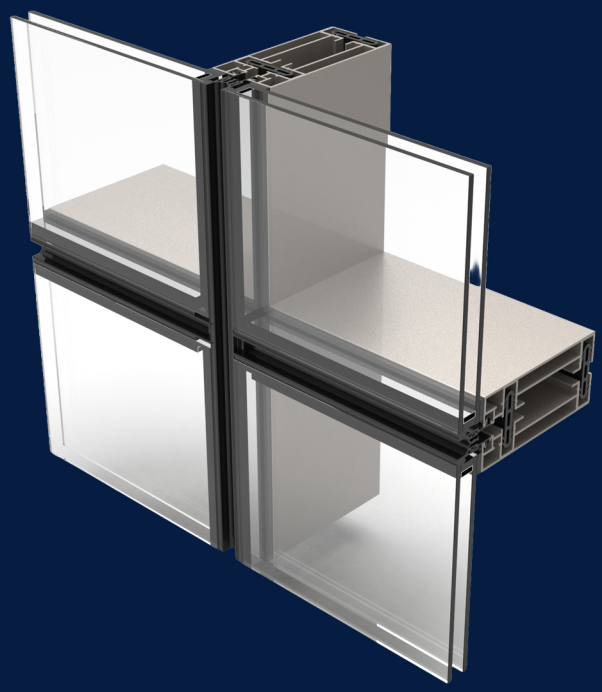

UN-4-76-SGEP (F/F)

4 Sided Frameless Structurally Glazed

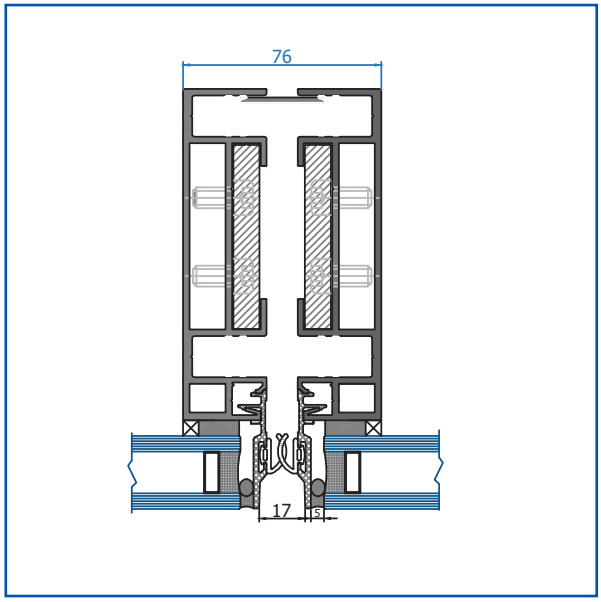

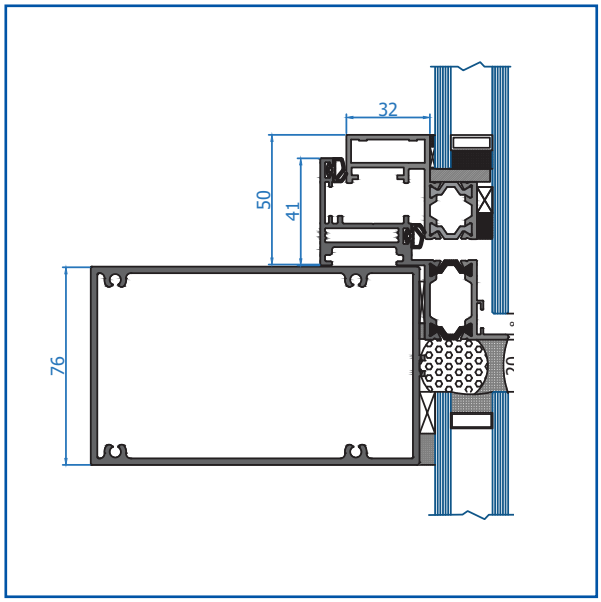

Key Features

SIZE

- Total frame profile widths only 76mm.
- Profile depths from, 127mm to 200 mm.

PERFORMANCE

- Glass infill thickness up 38 mm.

DISCOVER MORE
ON OUR WEBSITE

UN-4-90-CG (F/F)

4 Sided Fully Capped Curtain Wall System

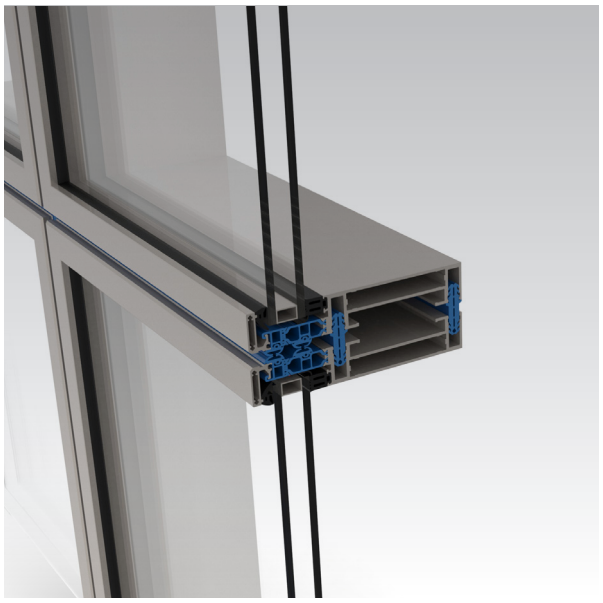

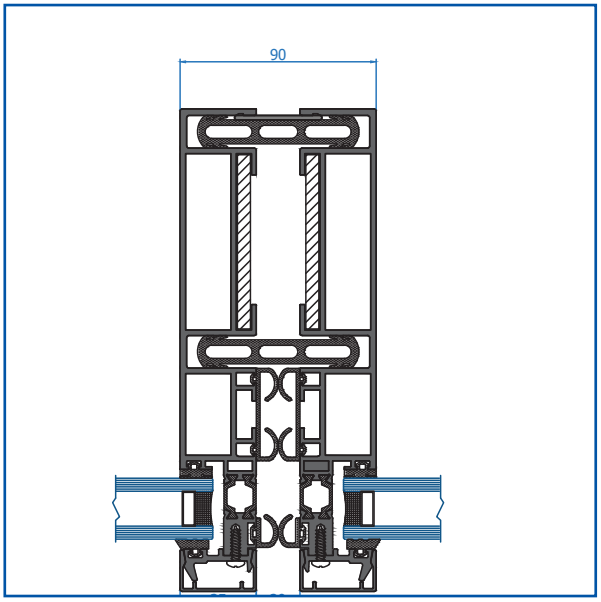

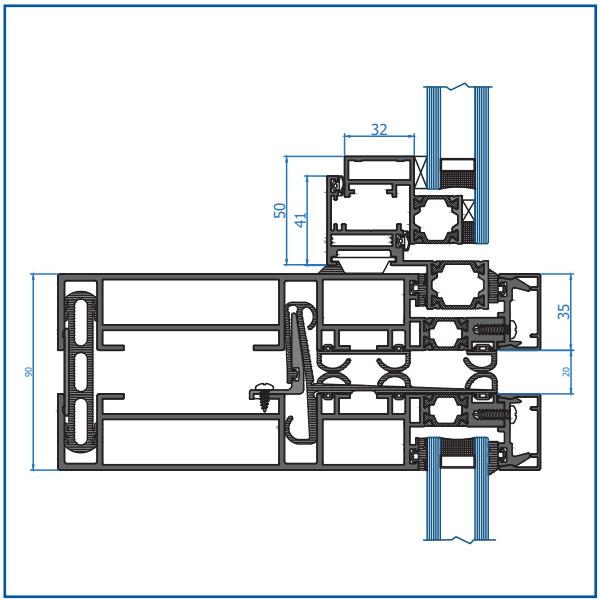

Key Features

SIZE

- Total frame profile widths only 90 mm.
- Profile depths 165.5 mm.

PERFORMANCE

- Glass infill thickness up 38 mm.

DISCOVER MORE ON OUR WEBSITE

TB-25

BRITAL Minimal Slide

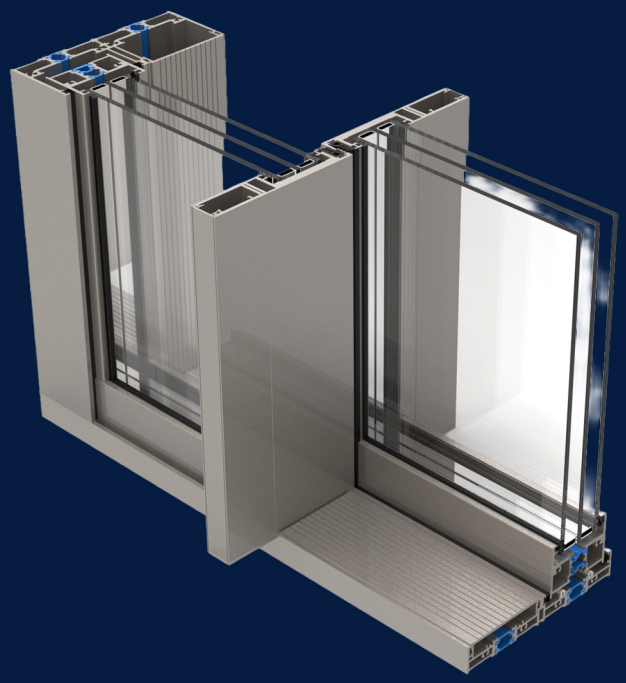

TB-25-MINIMAL SLIDE

Slide Horizontal Sliding Window System (Thermally Broken)

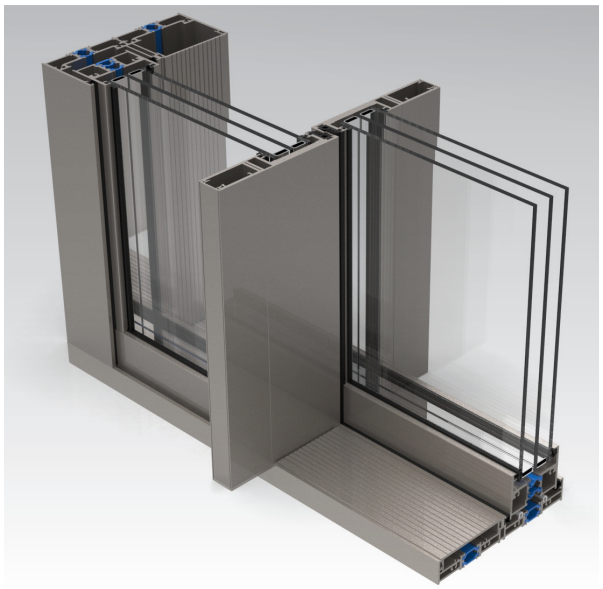

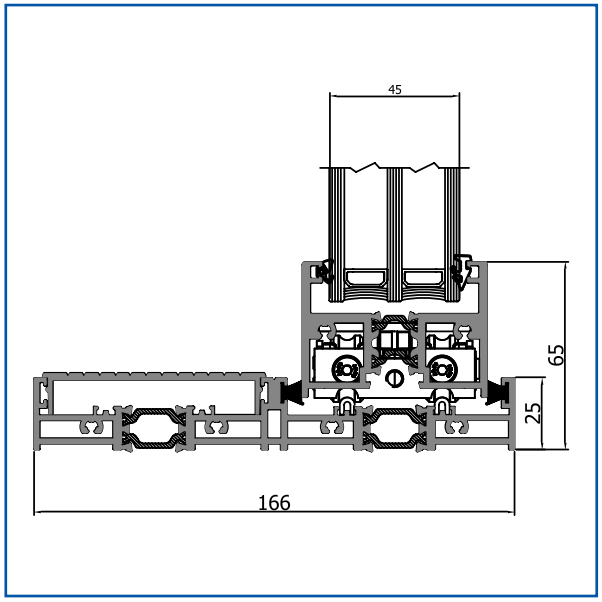

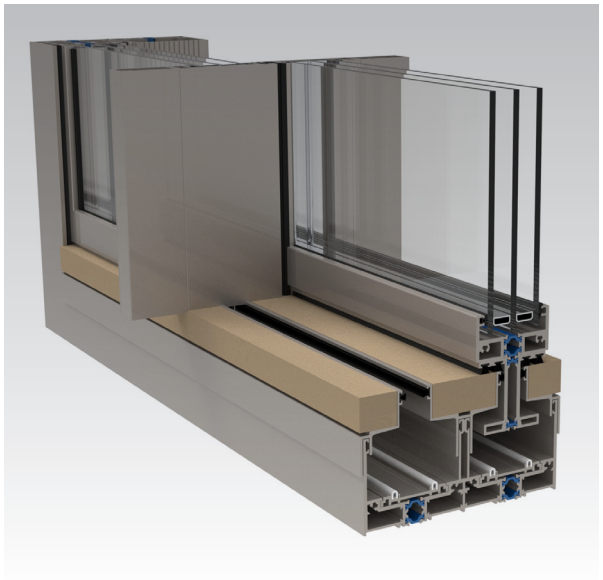

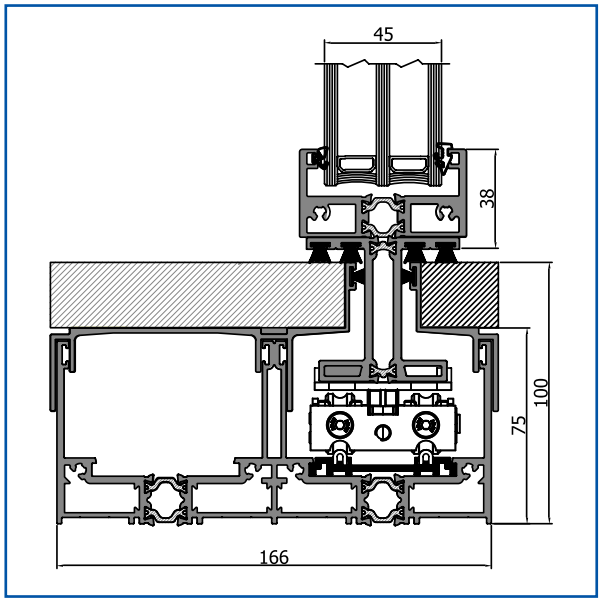

Key Features

SIZE

- Maximum sash weight 700 Kg.
- Maximum height 5m.
- Narrow sight line interlock 25mm

PERFORMANCE

- Glass infill thickness up 46 mm.
- Optional motorization.
- Available in 1 up to 6 tracks, allowing up to 12 sliding.

DISCOVER MORE ON OUR WEBSITE

TB-25-MINIMAL SLIDE

Slide Horizontal Sliding Window System (Thermally Broken)

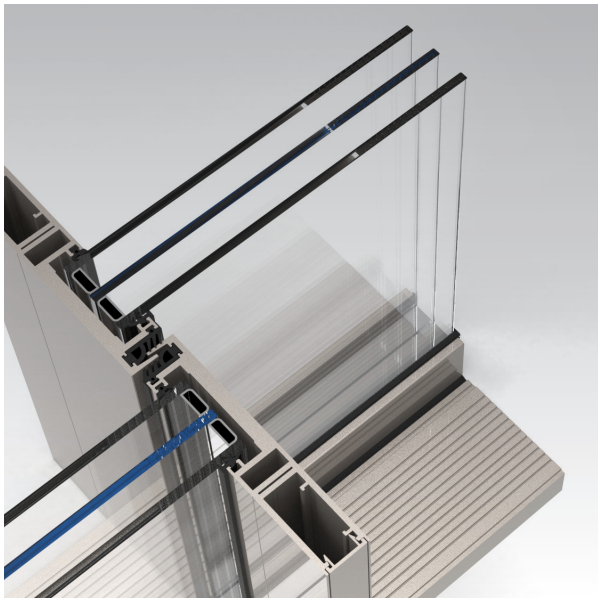

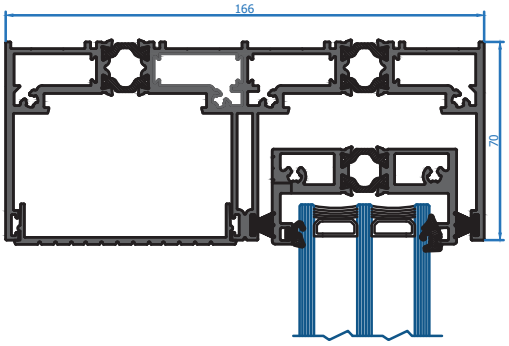

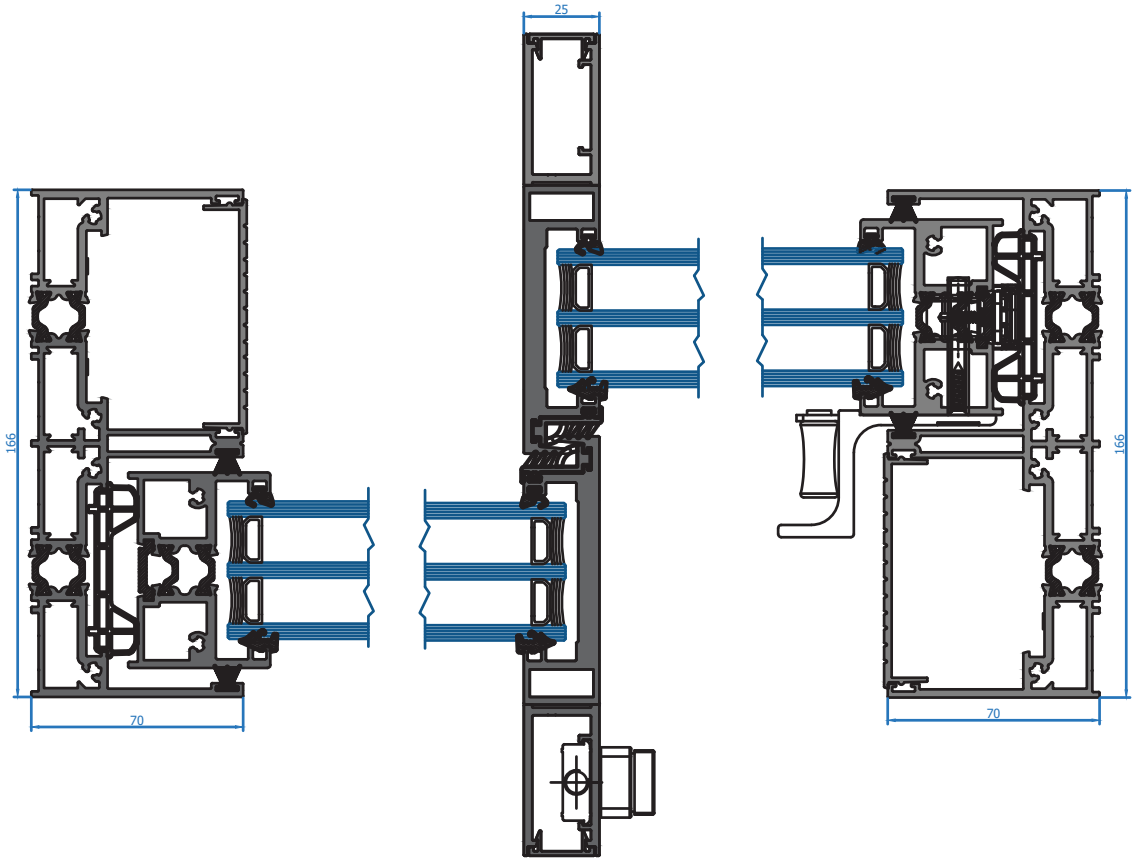

TB-25-MINIMAL SLIDE

Corner Sliding System

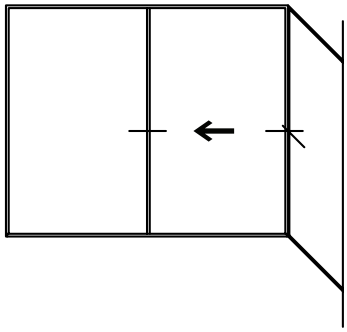

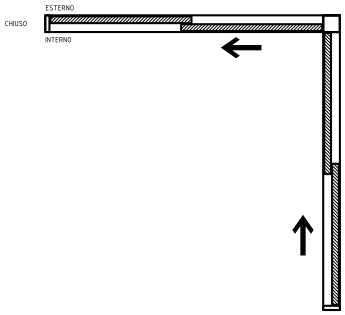

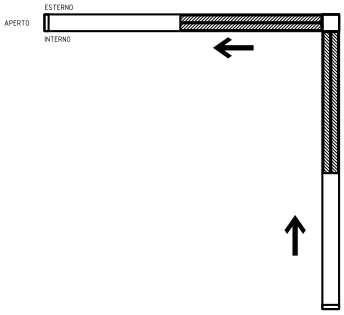

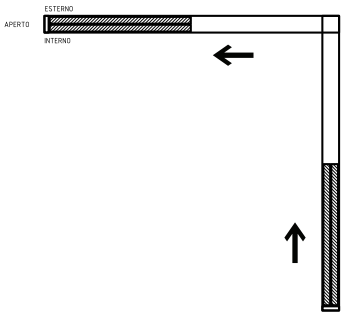

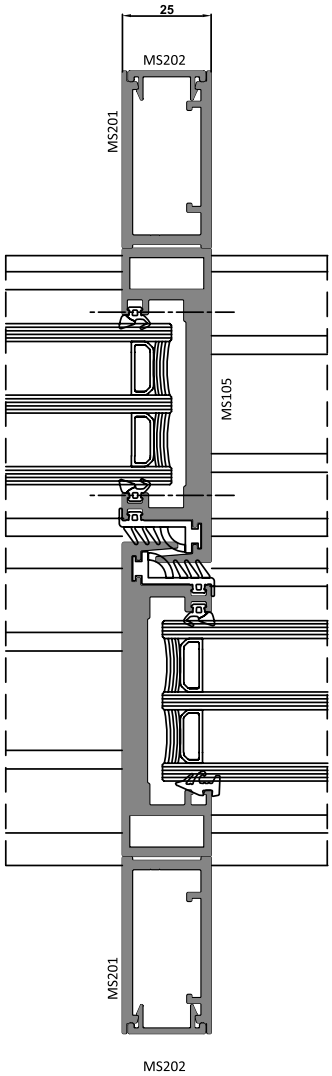

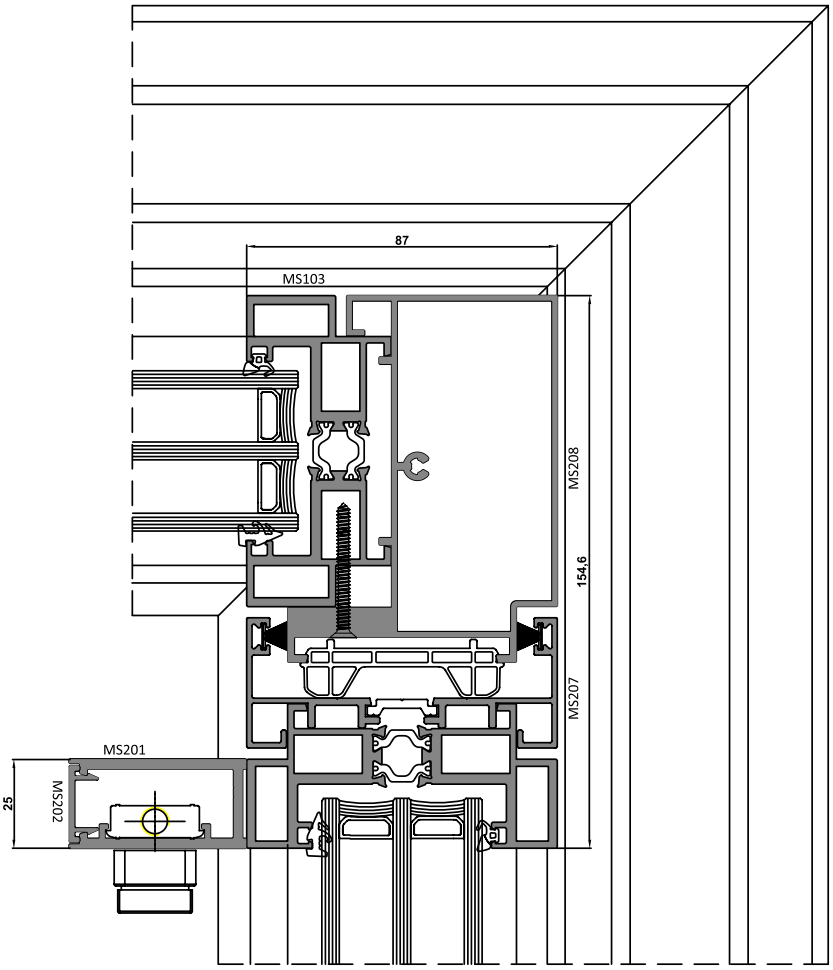

TB-25-MINIMAL SLIDE

3 Truck Solution

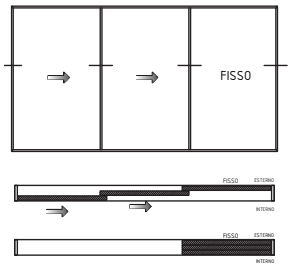

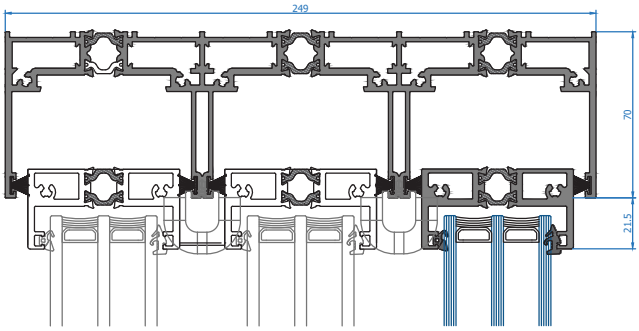

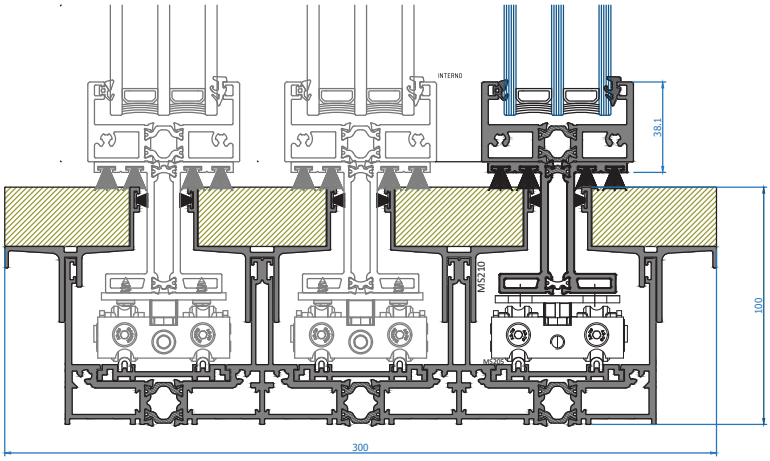

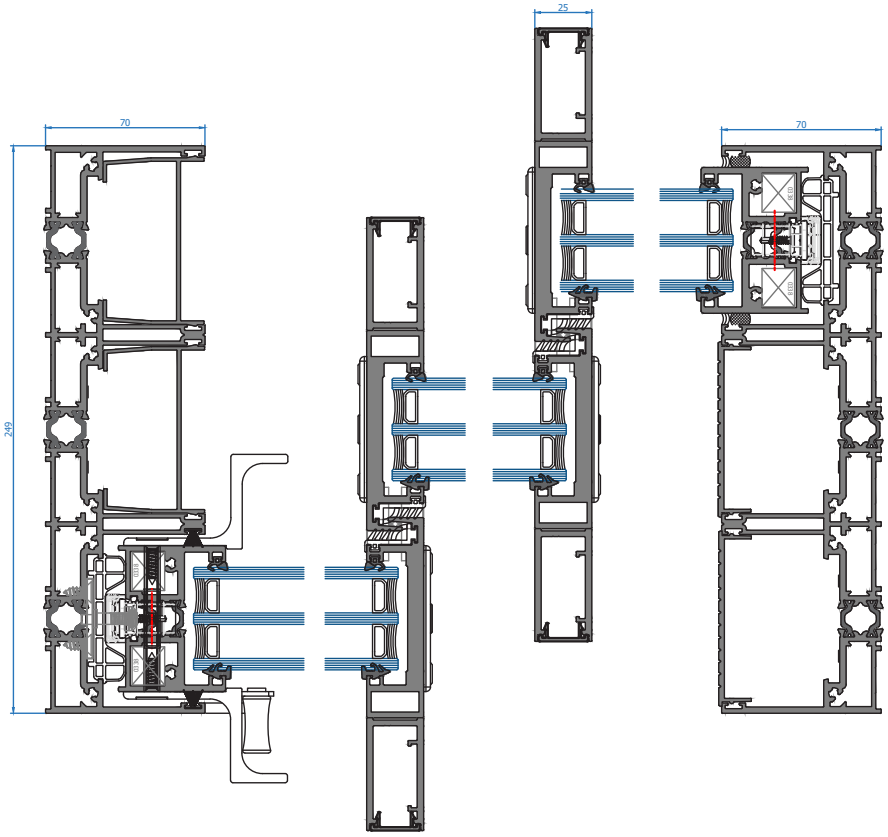

TB-25-MINIMAL SLIDE

Slide Horizontal Sliding Window System (Thermally Broken)

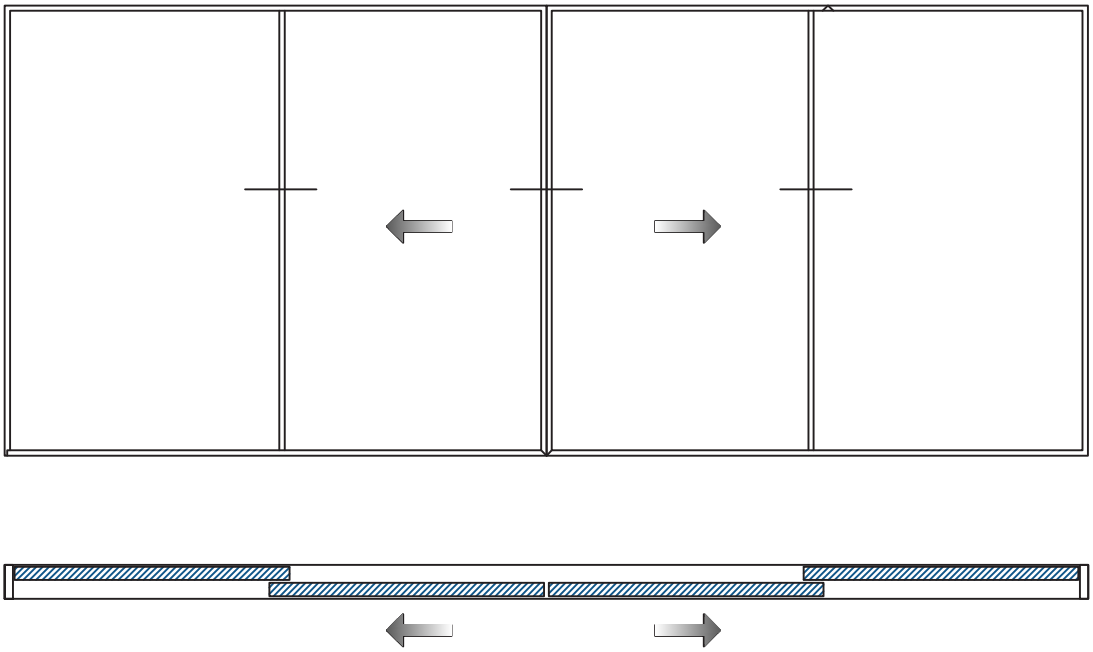

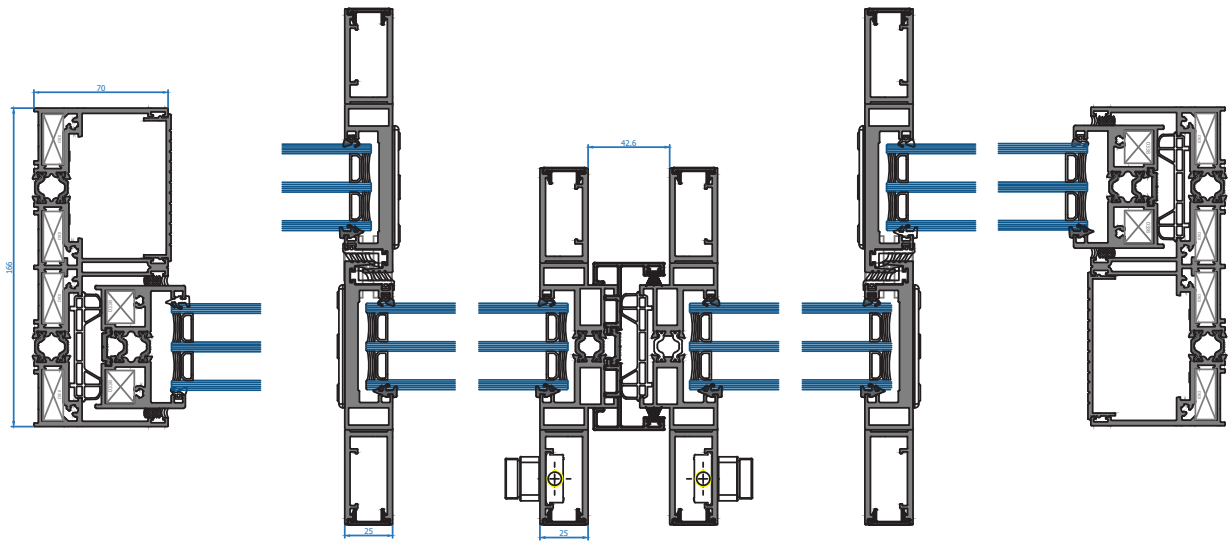

TB-25-MINIMAL SLIDE

Slide Horizontal Sliding Window System (Thermally Broken)

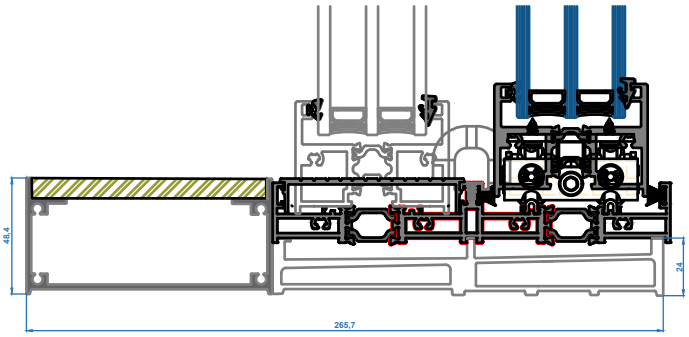

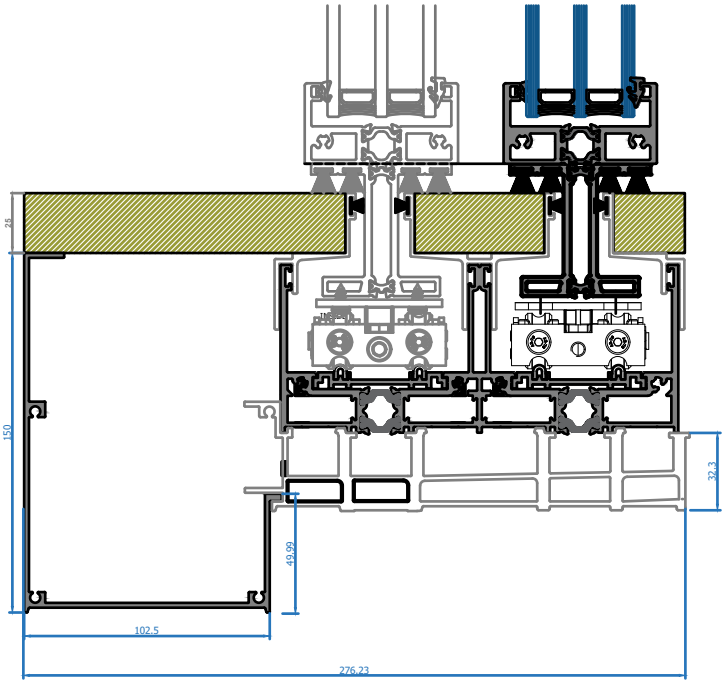

TB-50

BRITAL Floding System

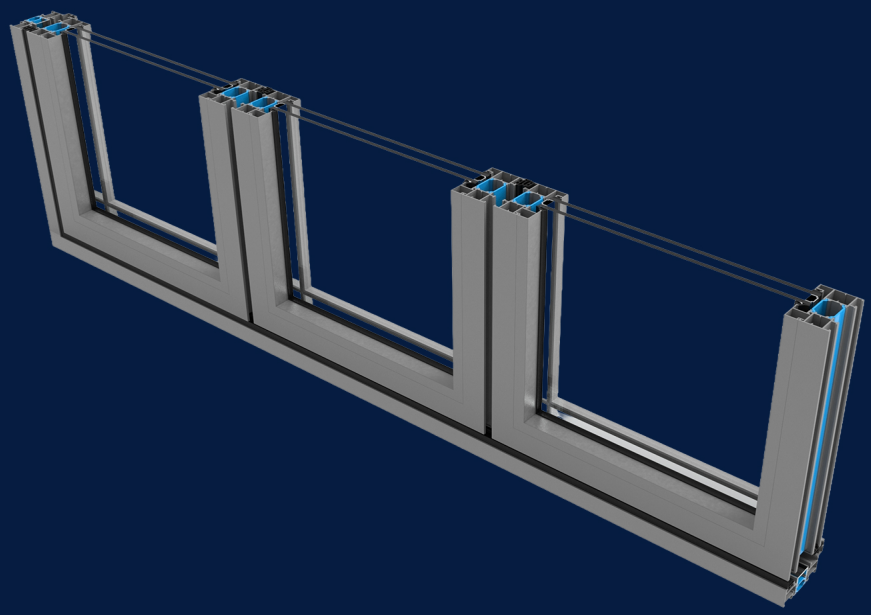

TB-50-MINIMAL FOLDING

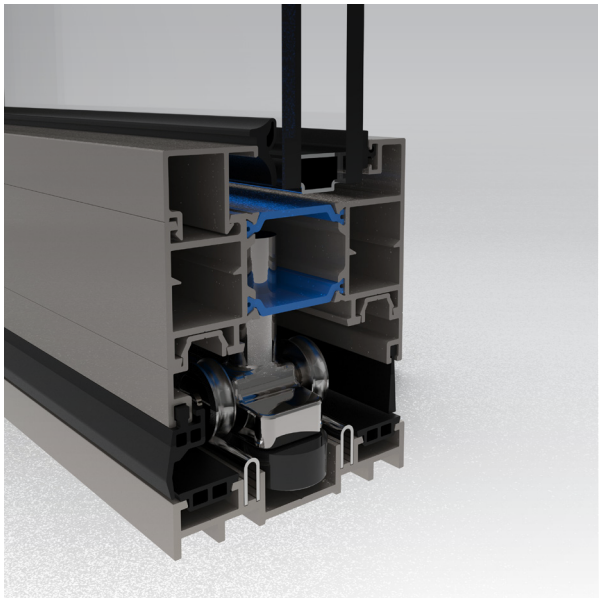

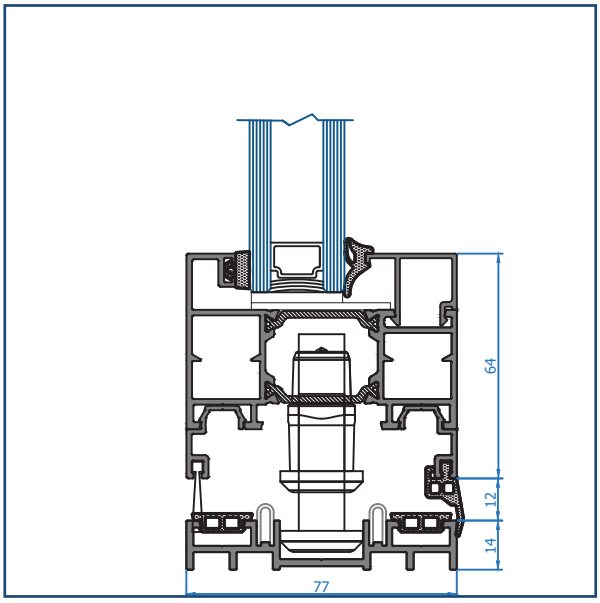

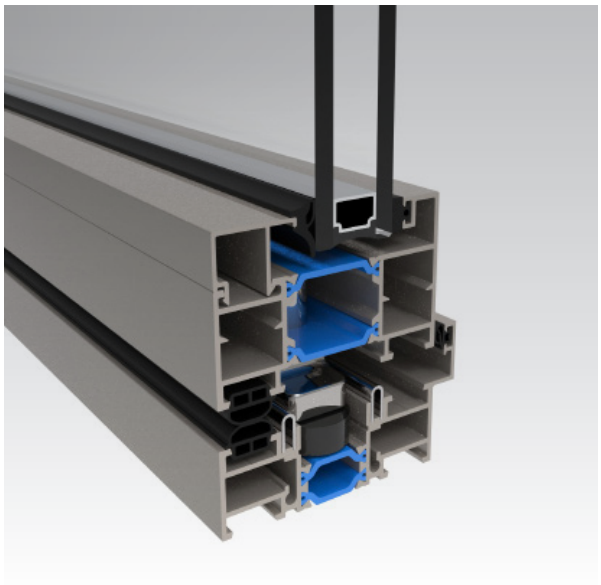

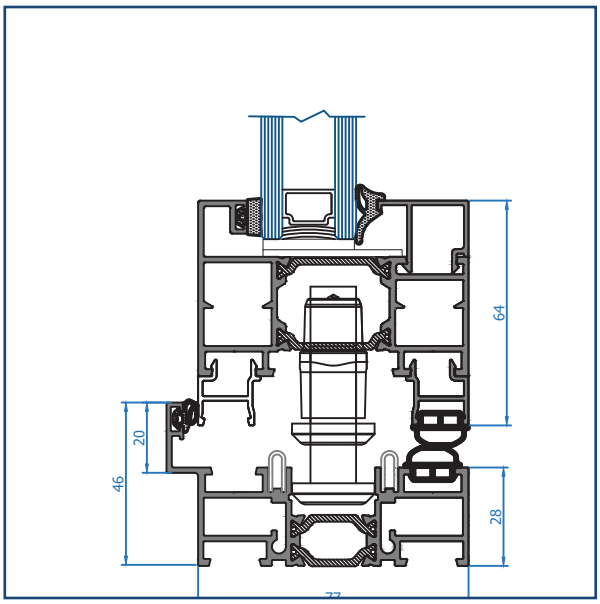

Key Features

SIZE

- Maximum sash weight: 90 Kg.
- Maximum panel Height: 3500 mm.
- Maximum panel Width: 1250 mm.

PERFORMANCE

- Narrow sight line: Interlock 50mm TB & 56mm NTB.
- Bottom track 14mm & 46mm
- Glass in fill thickness up to 46 mm.

DISCOVER MORE
ON OUR WEBSITE

FOLDING TYPOLOGY

2 Sash

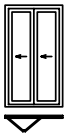

2 Sash

3 Sash

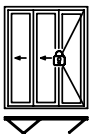

2+1 Sash

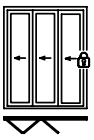

3 Sash

4 Sash

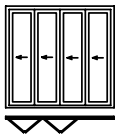

4 Sash

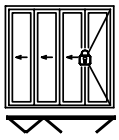

3+1 Sash

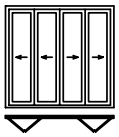

2+2 Sash

5 Sash

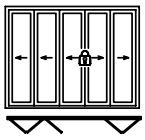

3+2 Sash

4+1 Sash

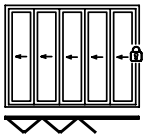

5 Sash

6 Sash

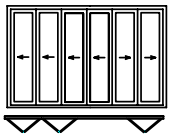

4+2 Sash

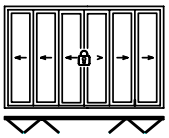

3+3 Sash

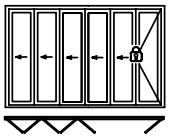

5+1 Sash

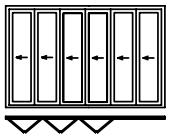

6 Sash

7 Sash

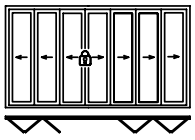

3+4 Sash

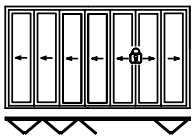

5+2 Sash

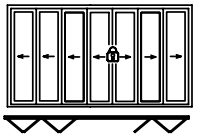

4+3 Sash

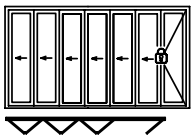

6+1 Sash

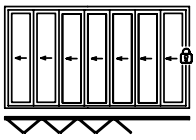

7 Sash

8 Sash

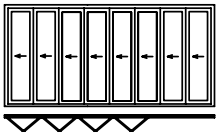

8 Sash

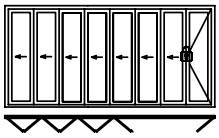

7+1 Sash

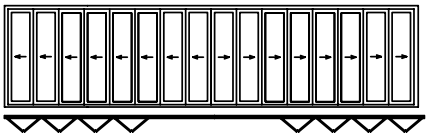

8+8 Sash

Tipologia/*Type*		*W_{min} sashes*	W_{max} sashes	*sashes*	*Load $_{max}$ sashes*
	odd sasheses	--	1200 mm	3000 mm	120 kg
	even sasheses	600 mm	1200 mm	3500 mm	120 kg

TB-50-MINIMAL FOLDING

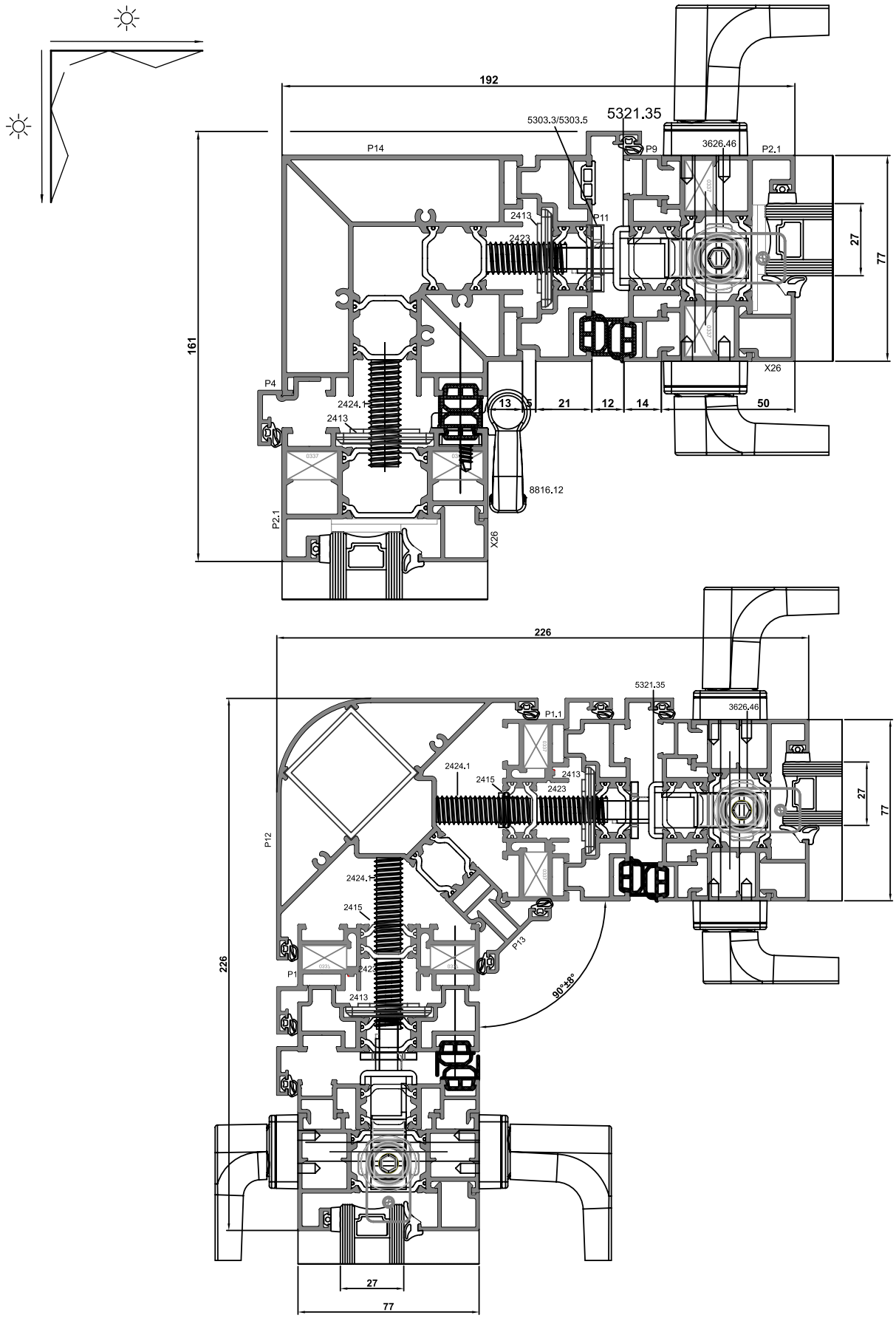

TB-50-MINIMAL FOLDING

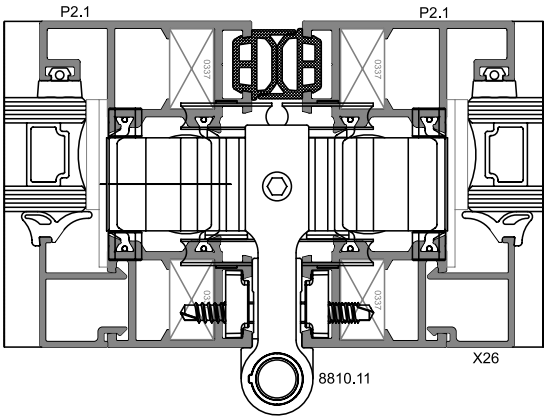

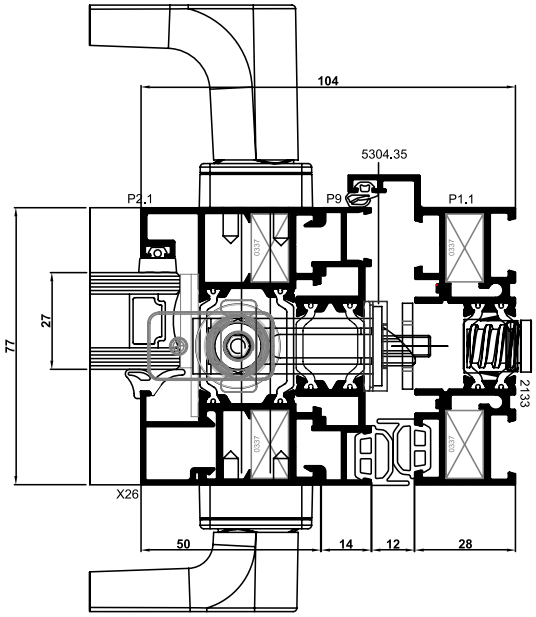

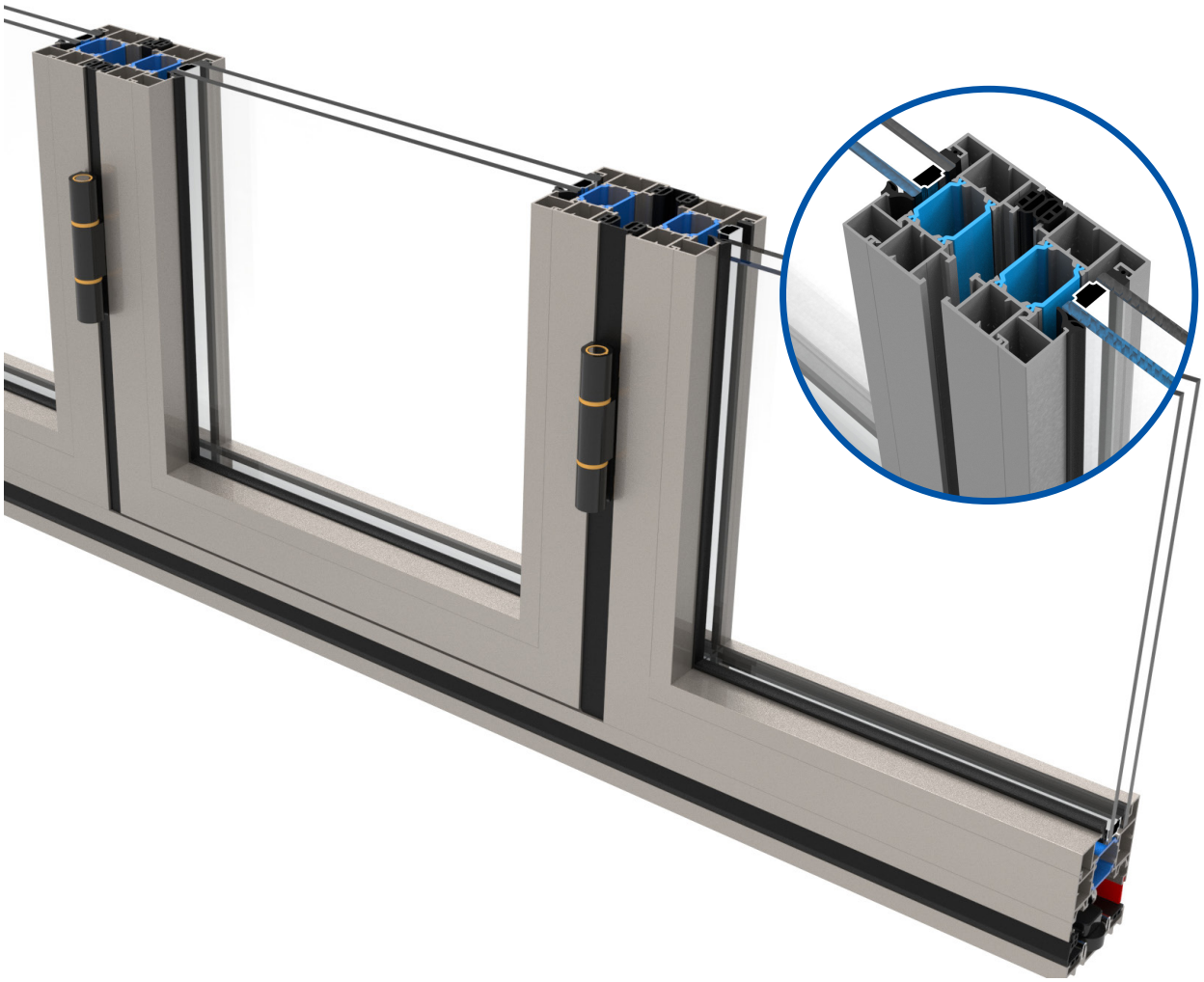

TB-50-MINIMAL FOLDING

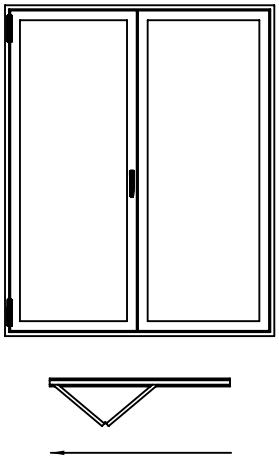

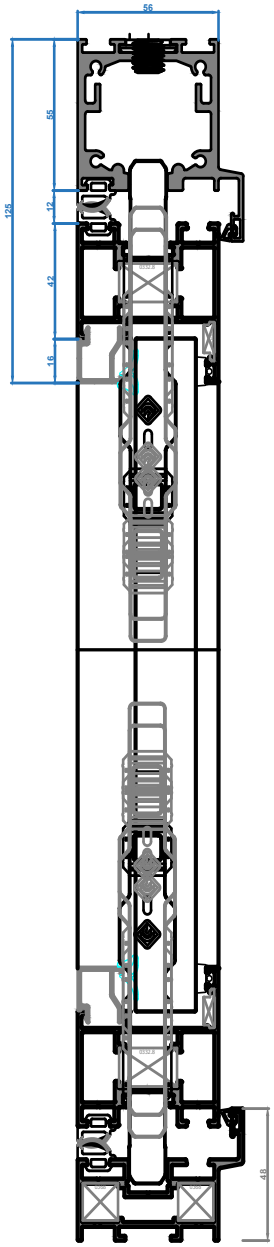

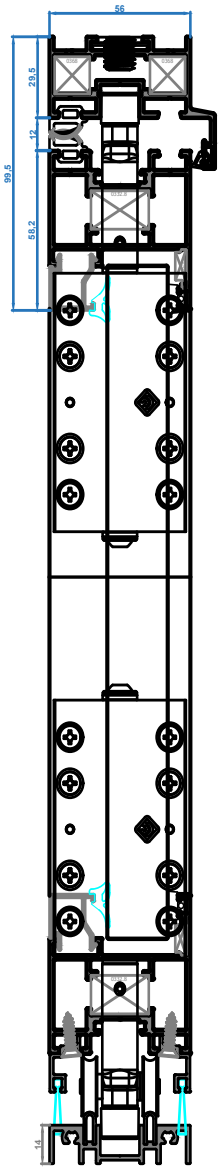

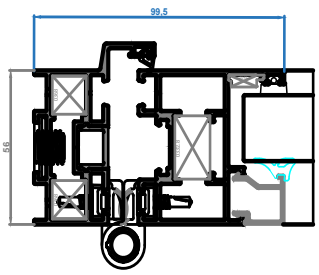

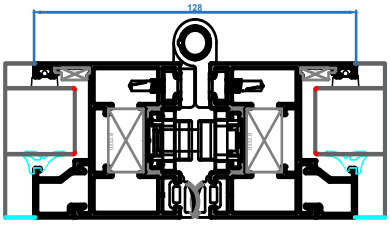

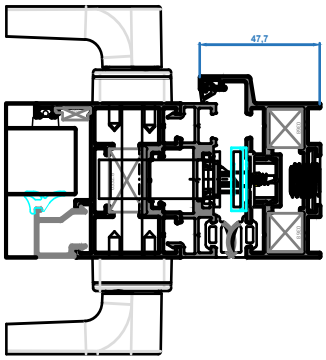

TB-50-MINIMAL FOLDING

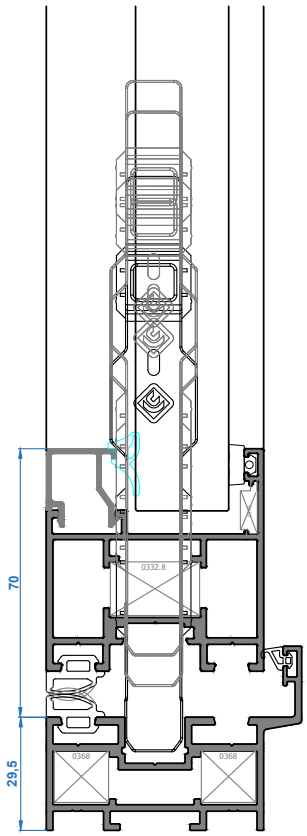

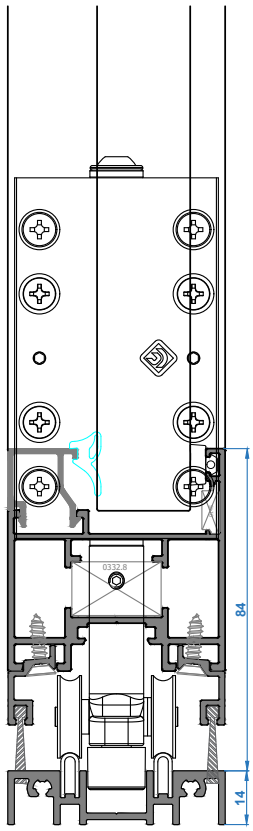

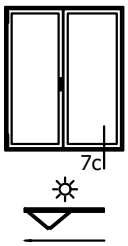

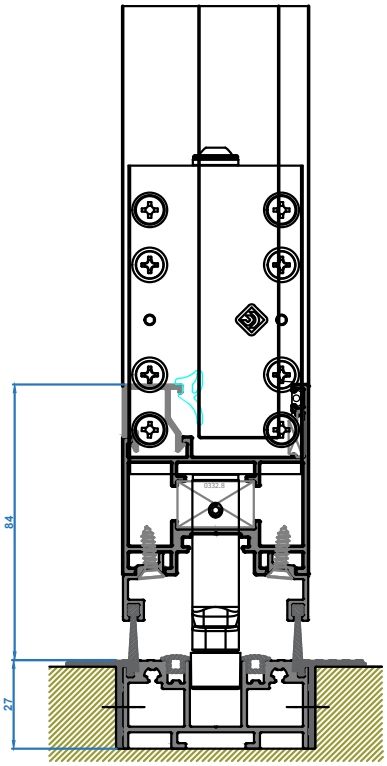

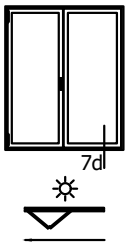

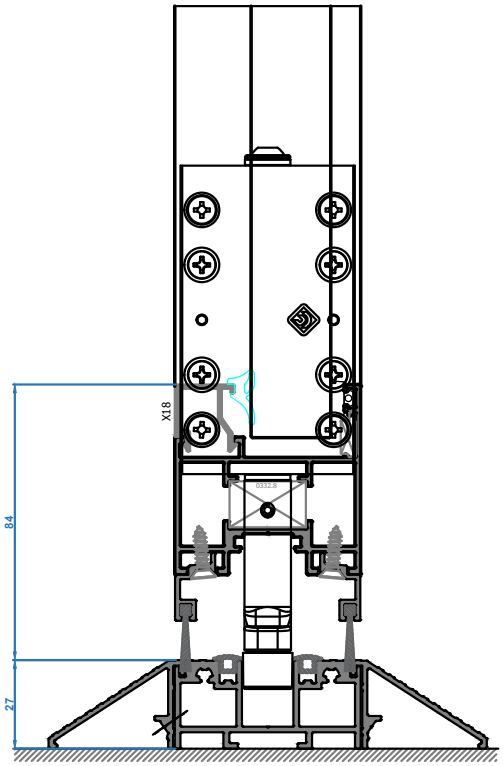

TB-HP45

BRITAL Lift & Slide

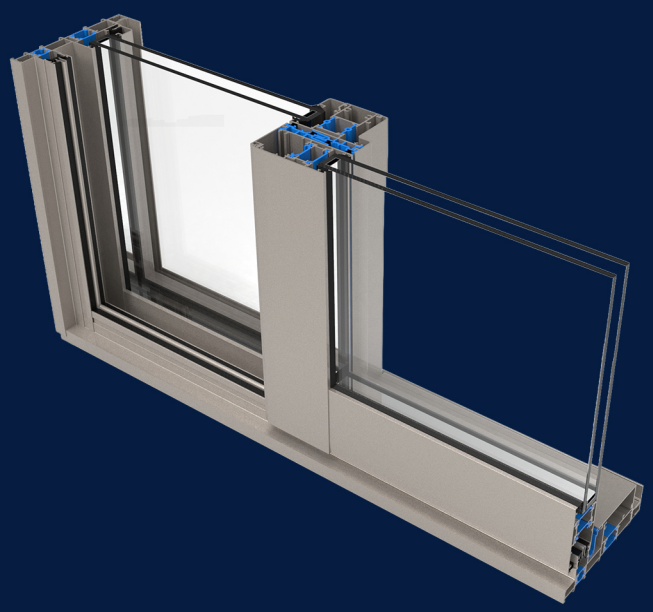

TB-HP-45

Slide Horizontal Sliding Window System (Thermally Broken)

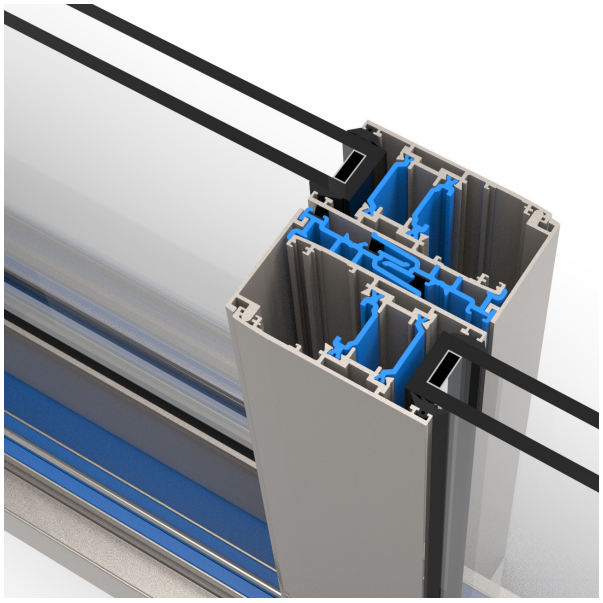

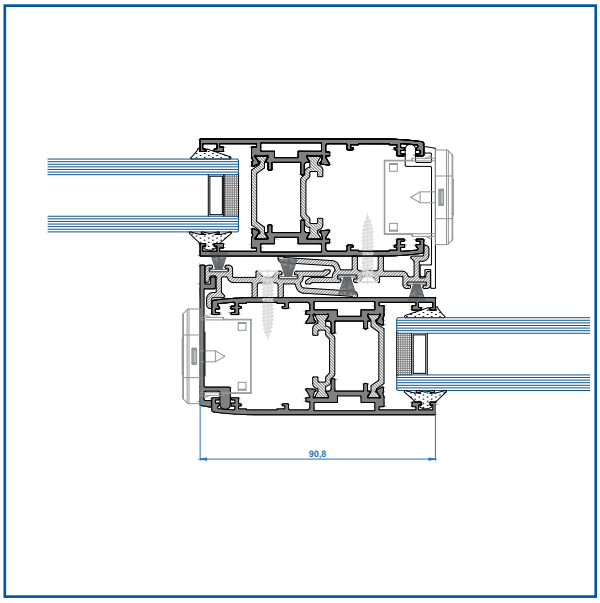

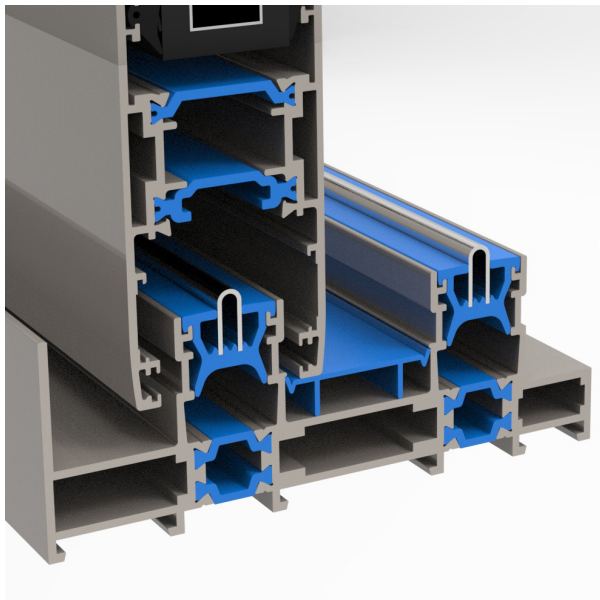

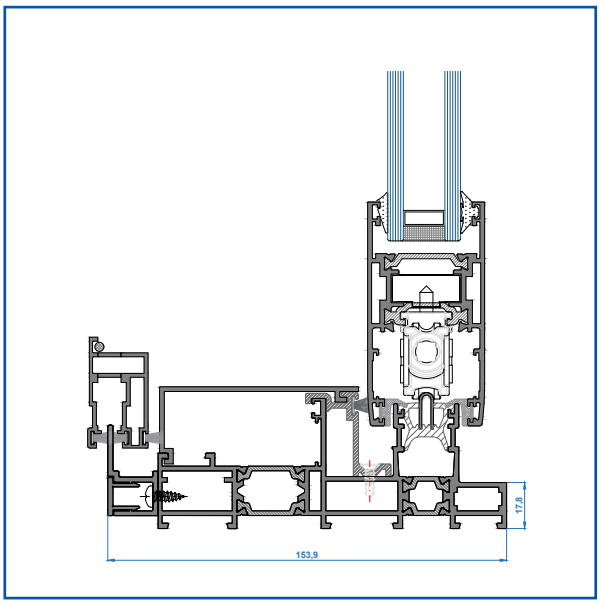

Key Features

SIZE

- Glass infill thickness: up to 45 mm.

PERFORMANCE

- Air Infiltration: Class 4, (BS EN 12207).
- Water Penetration: Class 8A (BS EN 12208).
- Wind Load Resistance: Class B5 (BS EN 12210).

DISCOVER MORE
ON OUR WEBSITE

TB-HP-45

Monorail Sliding Doors

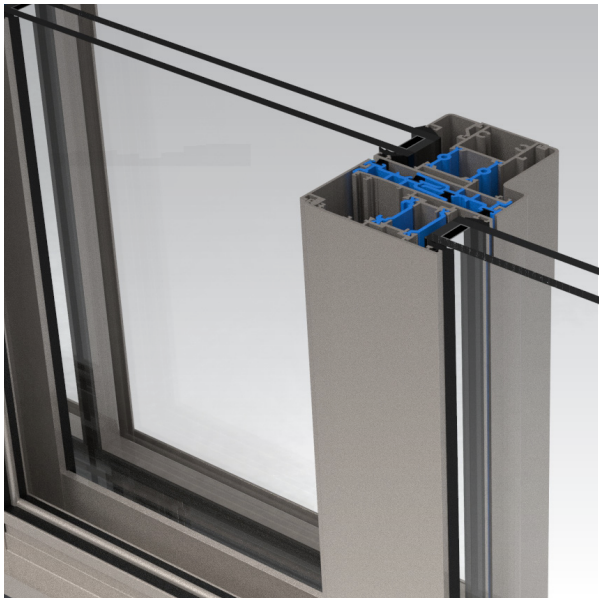

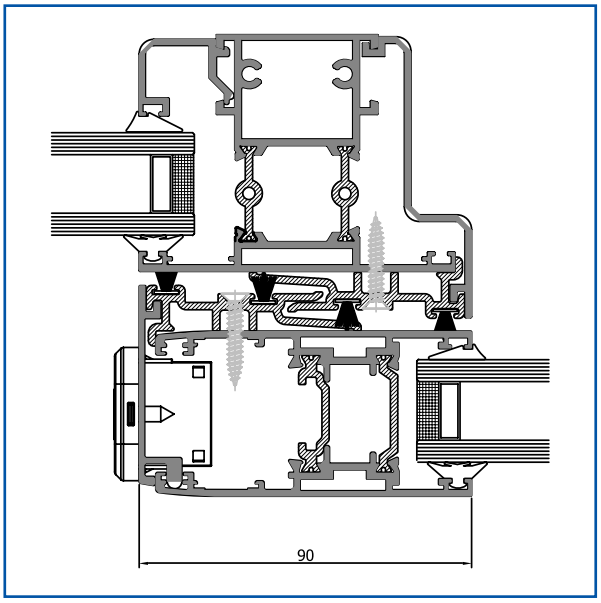

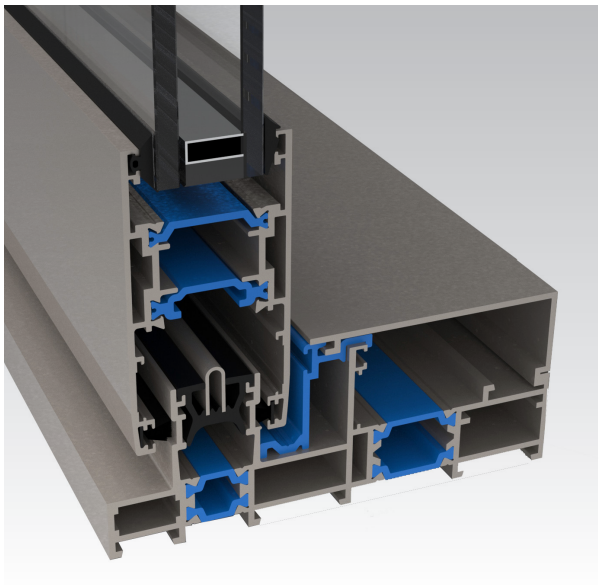

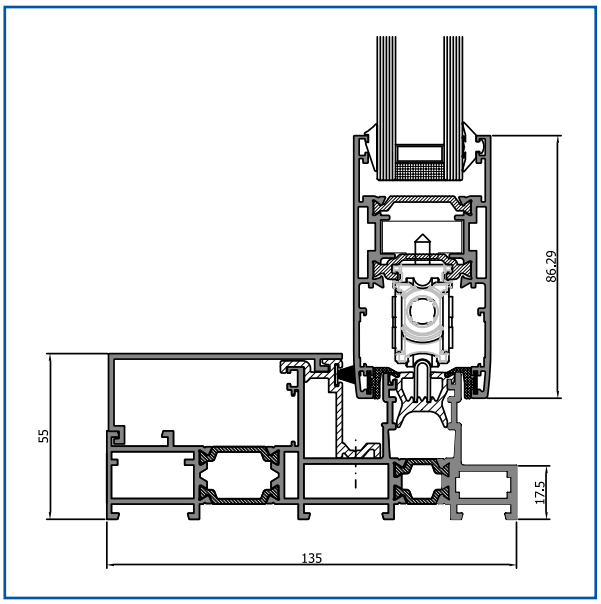

Key Features

SIZE

- Glass infill thickness: up to 45 mm.

PERFORMANCE

- Air Infiltration: Class 4, (BS EN 12207).
- Water Penetration: Class 8A (BS EN 12208).
- Wind Load Resistance: Class B5 (BS EN 12210).

DISCOVER MORE
ON OUR WEBSITE

TB-HP-45

Slide Horizontal Sliding Window System (Thermally Broken)

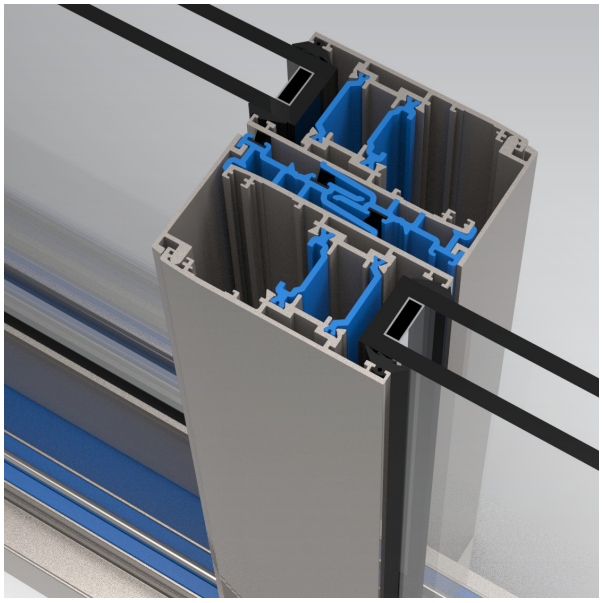

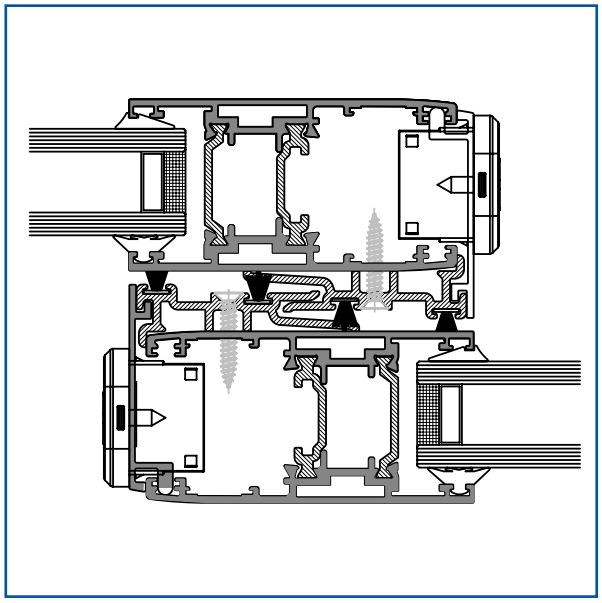

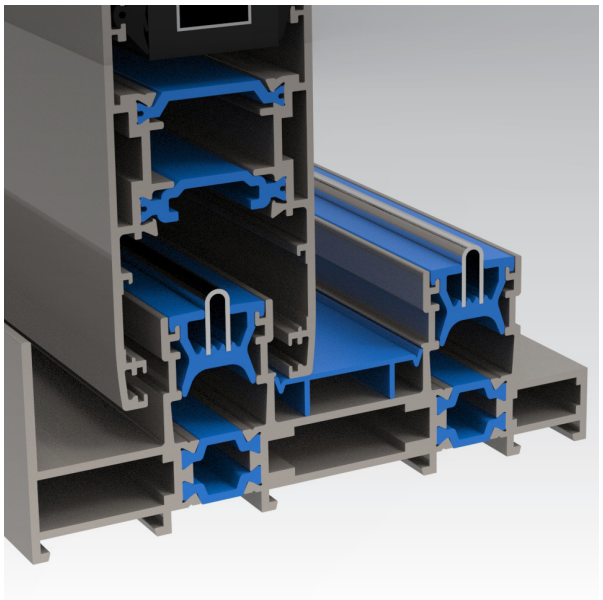

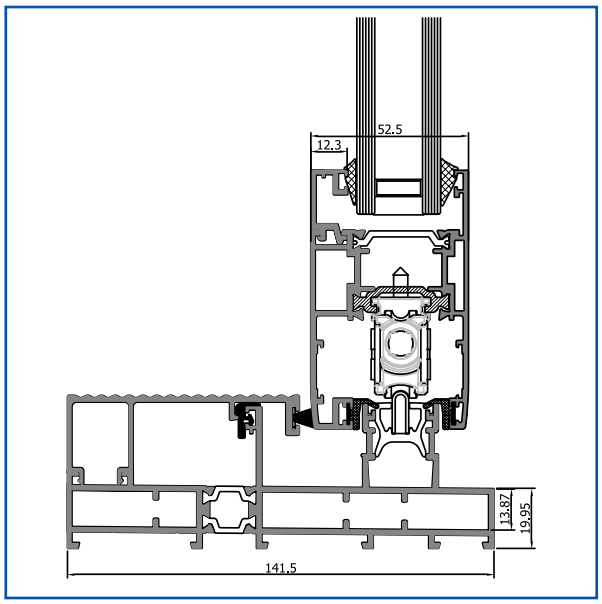

Key Features

SIZE

- Glass infill thickness: up to 45 mm.

PERFORMANCE

- Air Infiltration: Class 4, (BS EN 12207).
- Water Penetration: Class 8A (BS EN 12208).
- Wind Load Resistance: Class B5 (BS EN 12210).

DISCOVER MORE
ON OUR WEBSITE

TB-HP-45

Monorail Sliding Doors

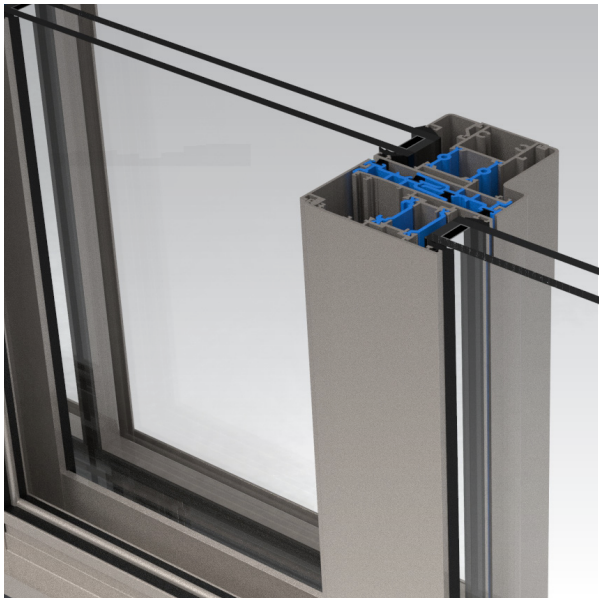

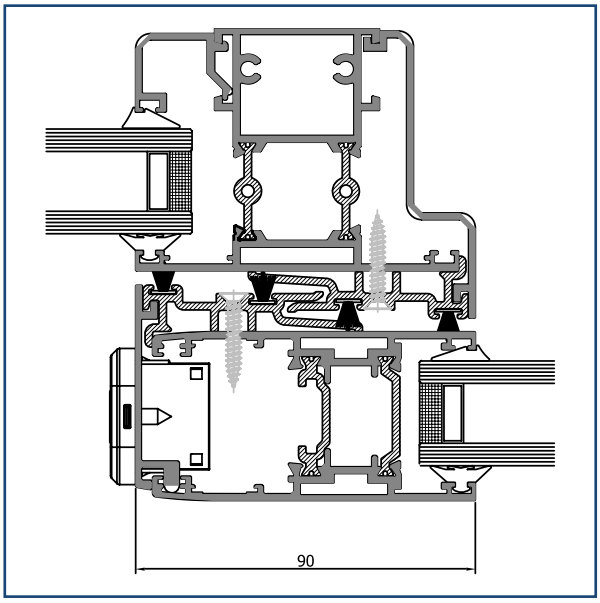

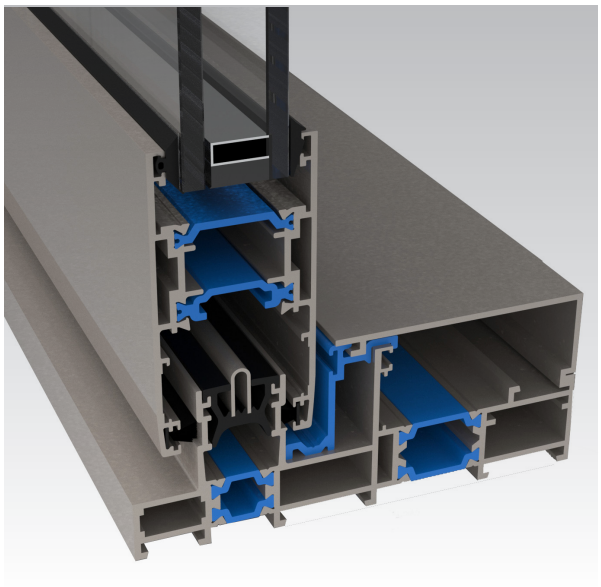

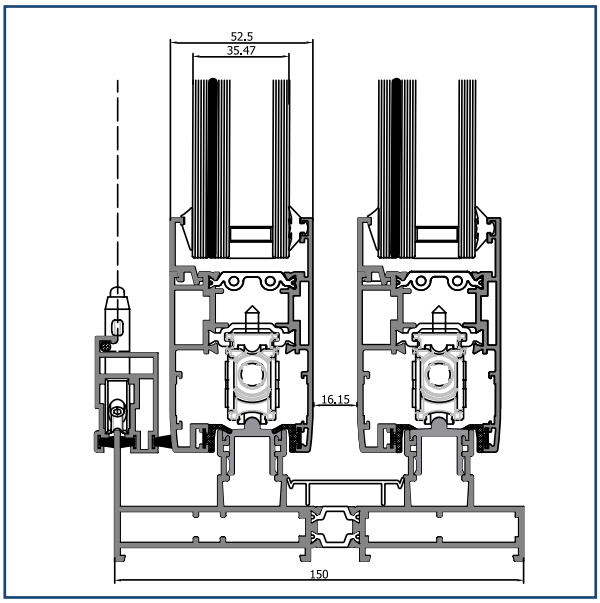

Key Features

SIZE

- Glass infill thickness: up to 45 mm.

PERFORMANCE

- Air Infiltration: Class 4, (BS EN 12207).
- Water Penetration: Class 8A (BS EN 12208).
- Wind Load Resistance: Class B5 (BS EN 12210).

DISCOVER MORE
ON OUR WEBSITE

TB-100

BRITAL Sliding Doors

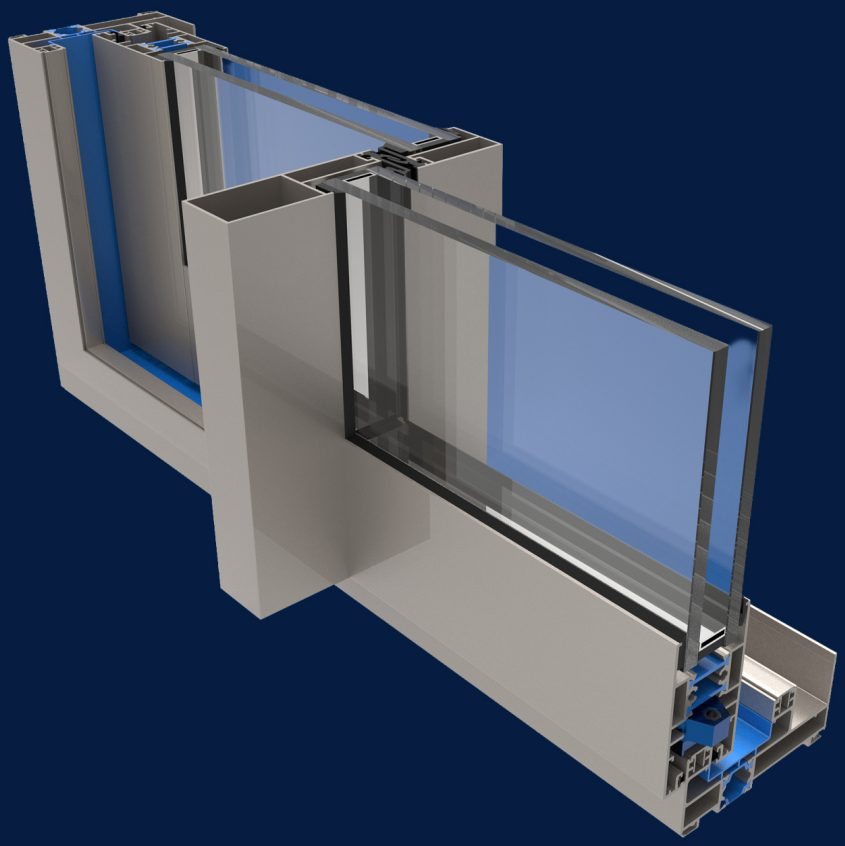

TB-100-SLIDE

Monorail sliding doors

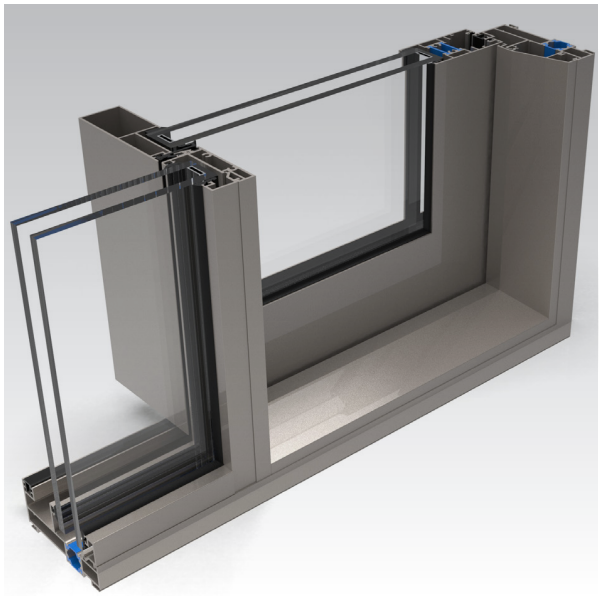

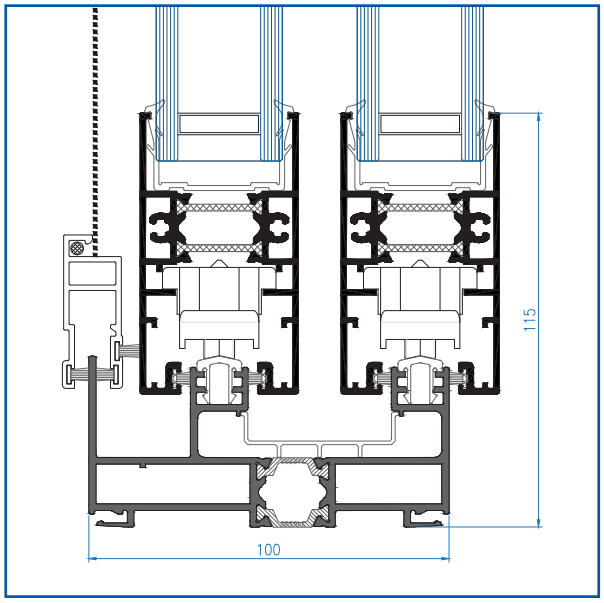

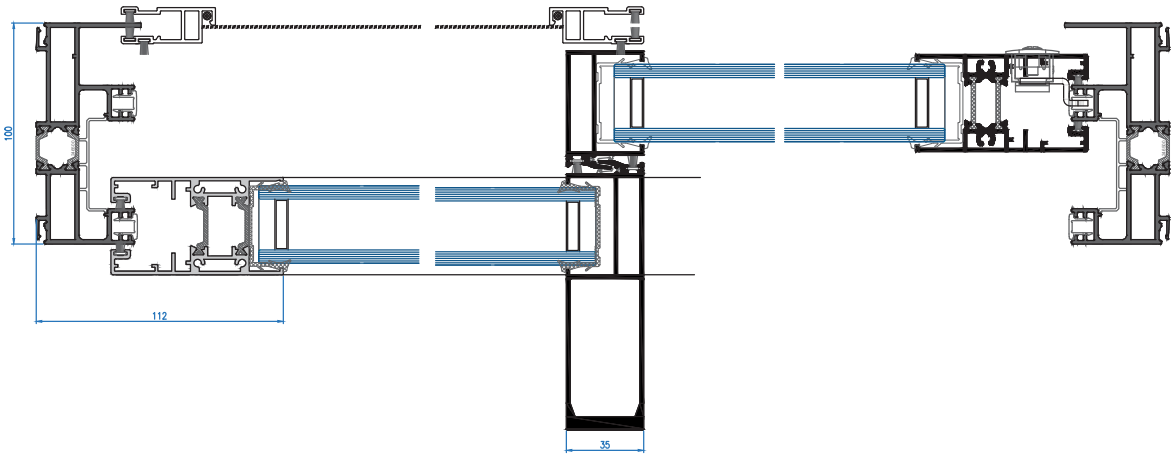

Key Features

SIZE

- Glass infill thickness: up to 38 mm.

PERFORMANCE

- Air Permeability Class 2 .
- Water tightness Class 7A (300 Pa).
- Wind resistance Class AS (2000 Pa).

DISCOVER MORE
ON OUR WEBSITE

TB-100-SLIDE

Slide Horizontal Sliding Window System (Thermally Broken)

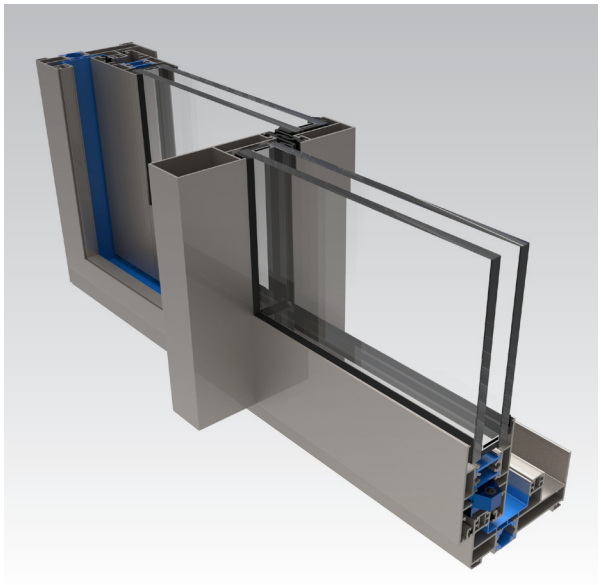

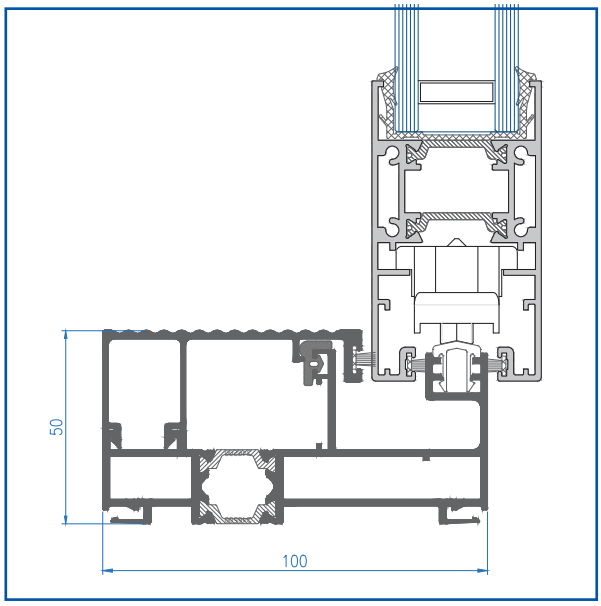

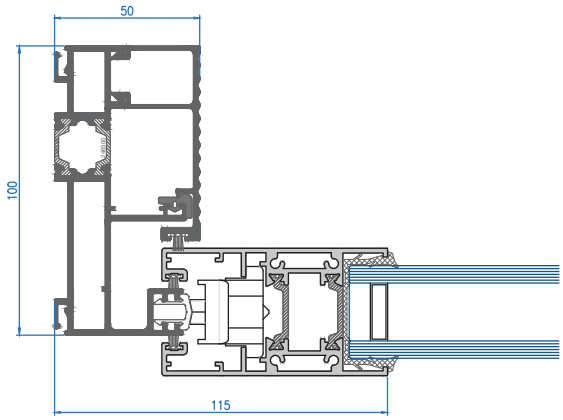

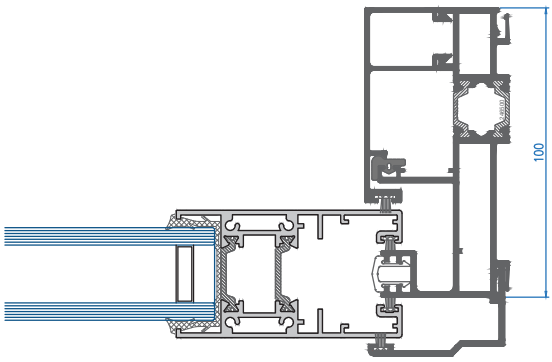

Key Features

SIZE

- Glass infill thickness: up to 45 mm.

PERFORMANCE

- Air Infiltration: Class 4, (BS EN 12207).
- Water Penetration: Class 8A (BS EN 12208).
- Wind Load Resistance: Class B5 (BS EN 12210).

DISCOVER MORE ON OUR WEBSITE

TB-84

BRITAL Slide System

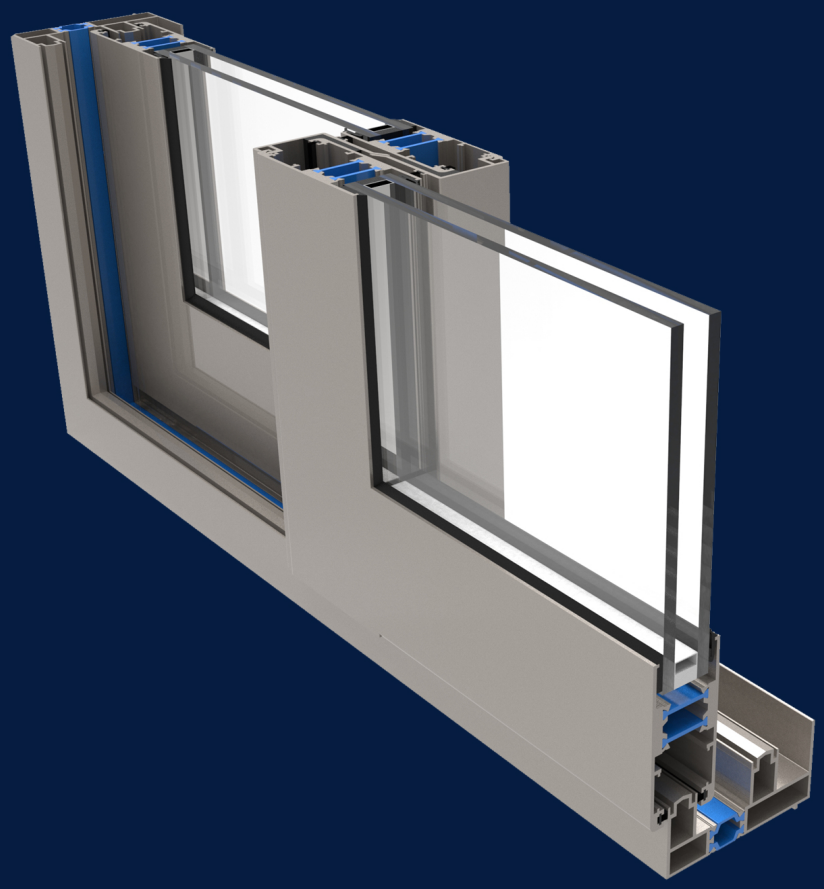

TB-84-SLIDE

Slide Horizontal Sliding Window System (Thermally Broken)

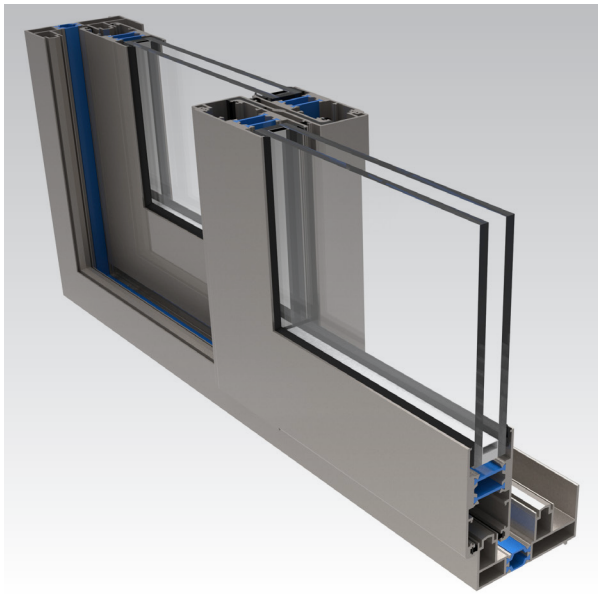

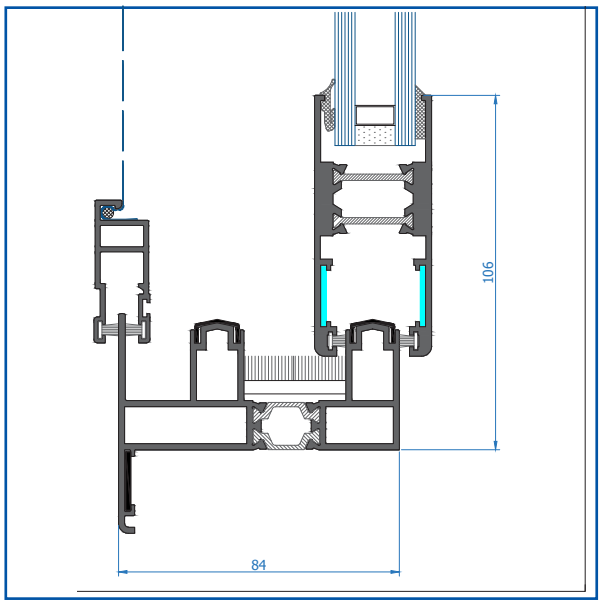

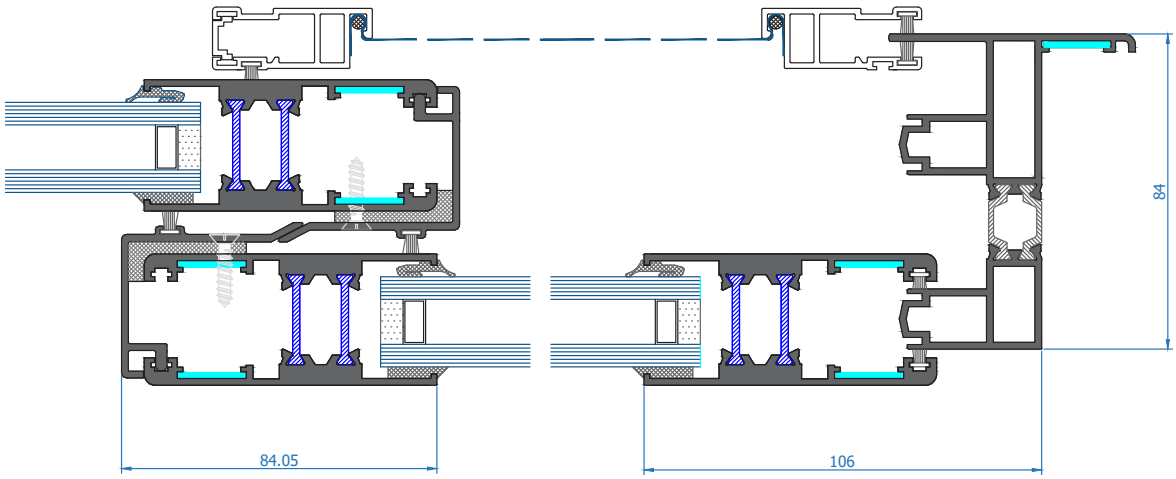

Key Features

SIZE

- Glass in-fill thickness up to 24mm.

PERFORMANCE

- Air Permeability Class 2.
- Water tightness Class 7A (300 Pa).
- Wind resistance Class AS (2000 Pa).

DISCOVER MORE
ON OUR WEBSITE

NTB-84-SLIDE

Slide Horizontal Sliding Window System

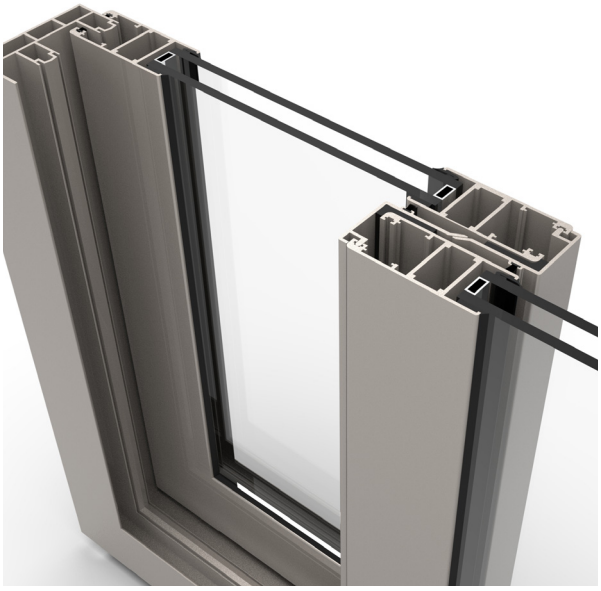

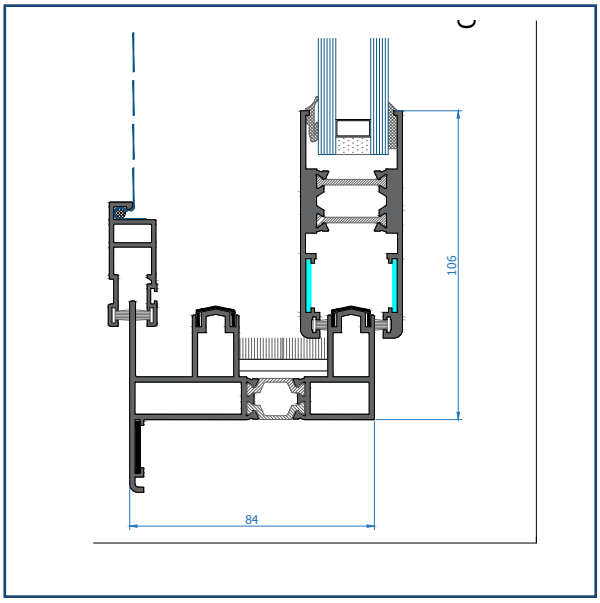

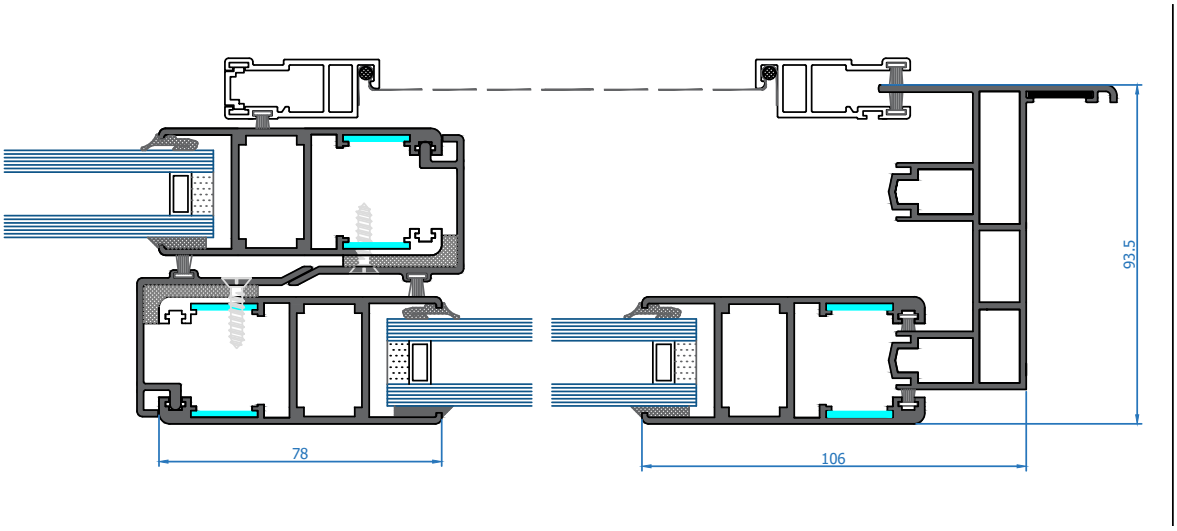

Key Features

SIZE

- Glass in-fill thickness up to 24mm.

PERFORMANCE

- Air Permeability Class 2.
- Water tightness Class 7A (300 Pa).
- Wind resistance Class AS (2000 Pa).

DISCOVER MORE
ON OUR WEBSITE

TB-113-TSDR

BRITAL Door systems

TB-113-TSDR

Tilt Slide Door System (Thermally Broken)

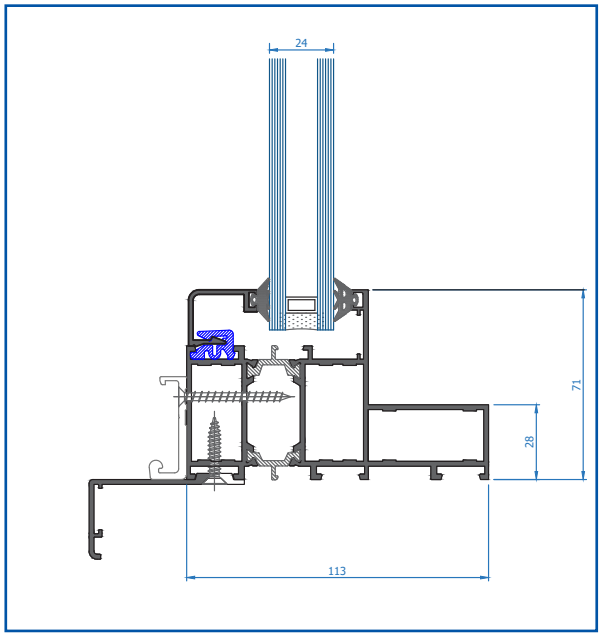

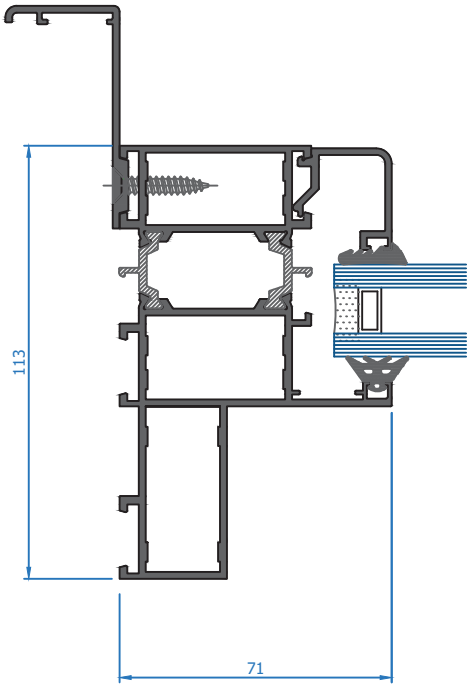

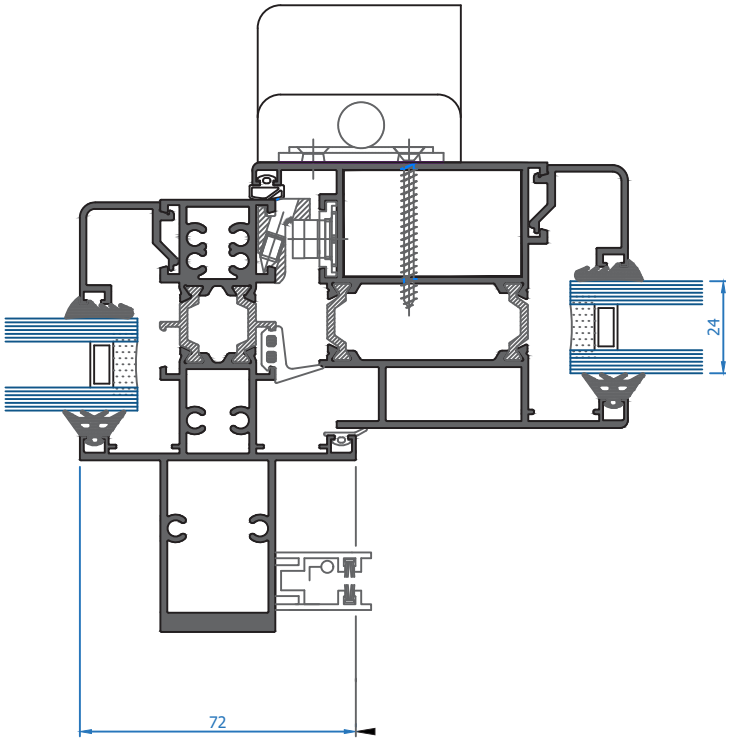

Key Features

SIZE

- Door Shutter Height: 2330 mm (max), 930 mm (min).
- Door Shutter Width: 1680 mm (max), 630 mm (min).
- Tilt slide Shutter Weights 150 kg (max).

PERFORMANCE

- Glass infill thickness up to 46mm.

DISCOVER MORE ON OUR WEBSITE

TB-68

BRITAL Door systems

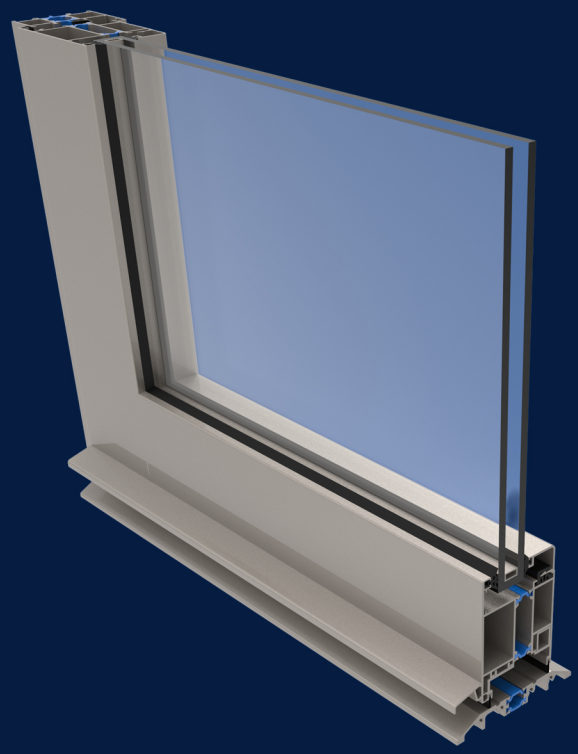

TB-68-DOOR

Door Open In And Out Systems (Thermally Broken)

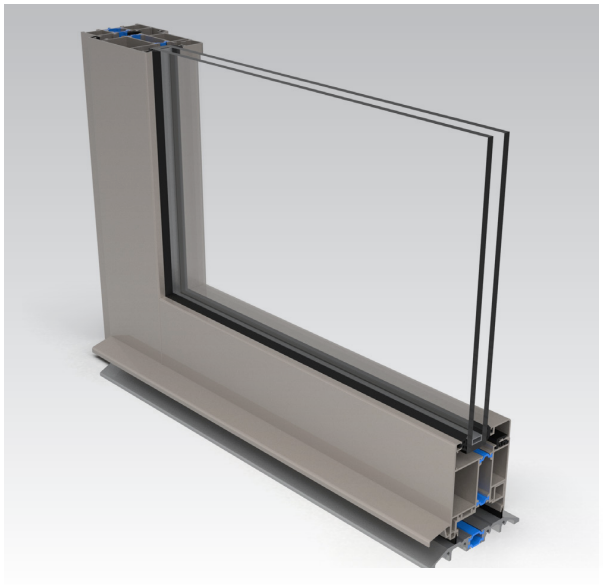

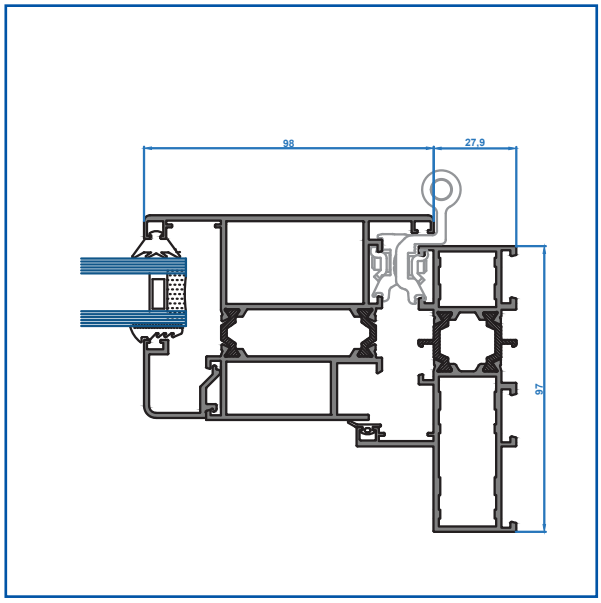

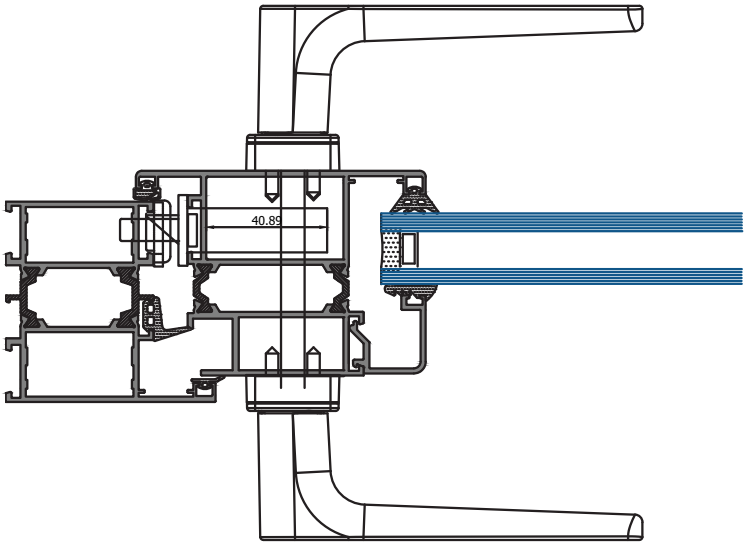

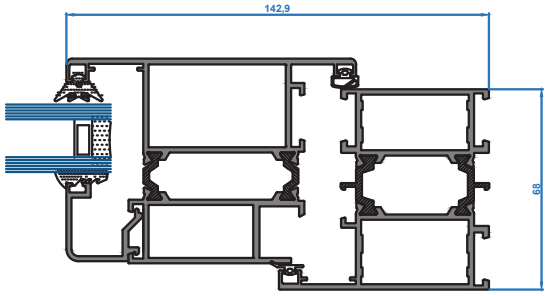

Key Features

SIZE

- Door Shutter : H3000 mm (max), W 1500 mm (max).

PERFORMANCE

- Glass infill thickness up to 46 mm.

DISCOVER MORE
ON OUR WEBSITE

TB-68-DOOR

Door Open In And Out Systems (Thermally Broken)

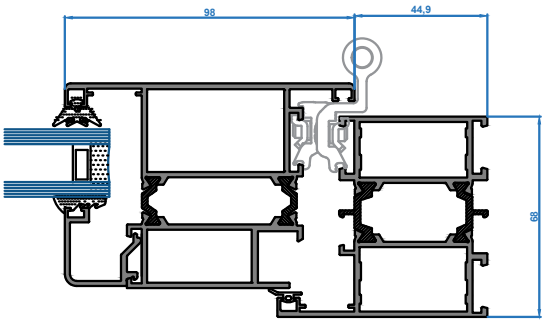

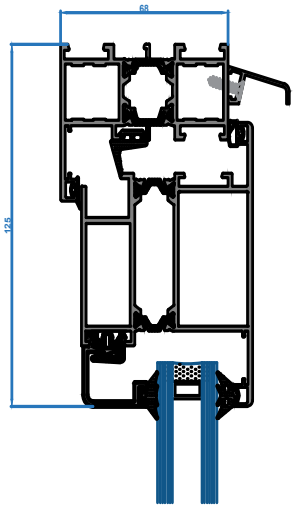

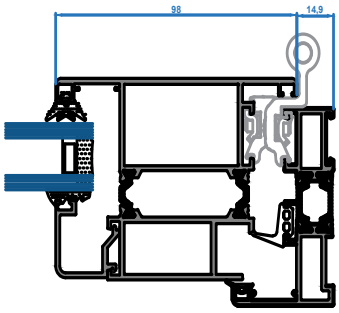

TB-68-DOOR

Door Open In And Out Systems (Thermally Broken)

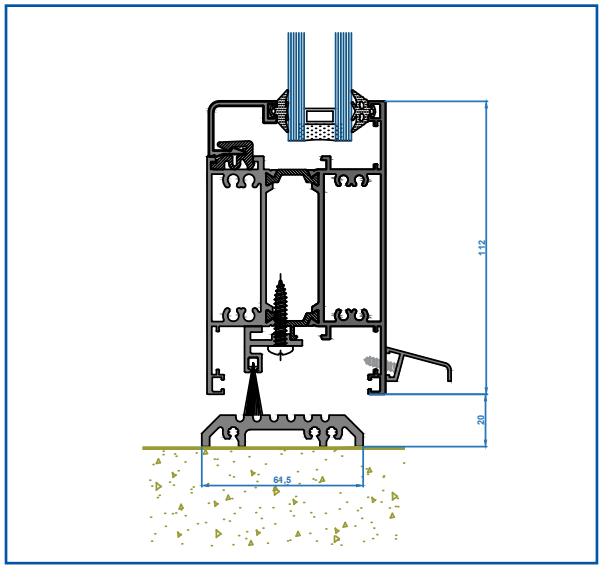

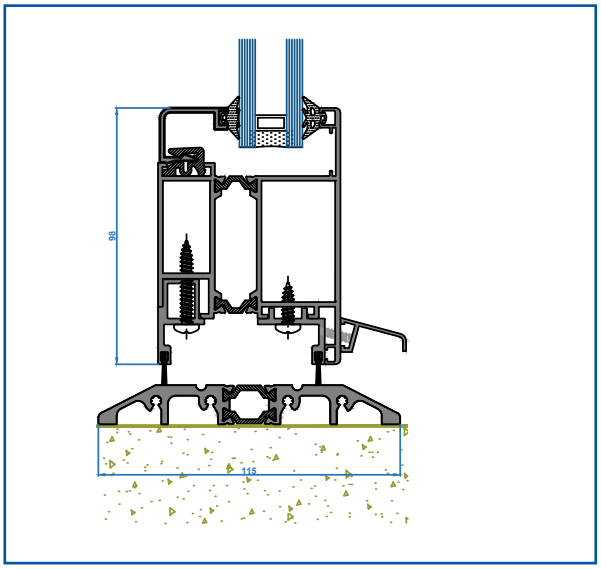

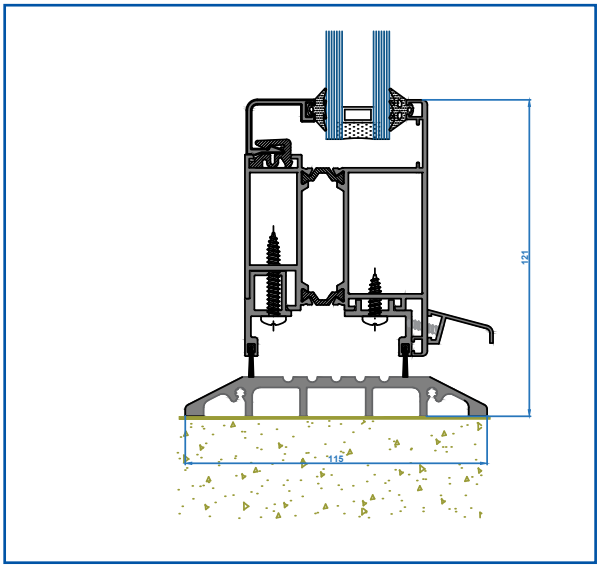

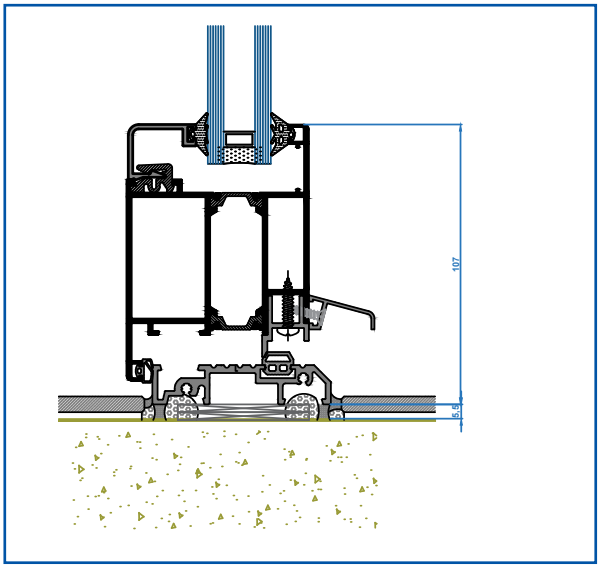

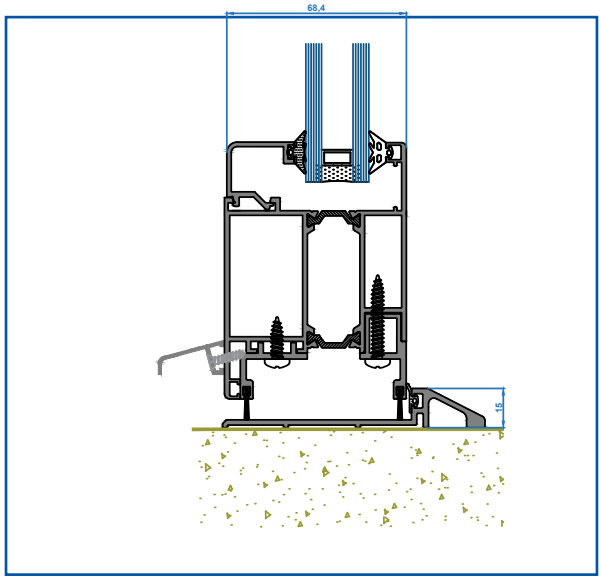

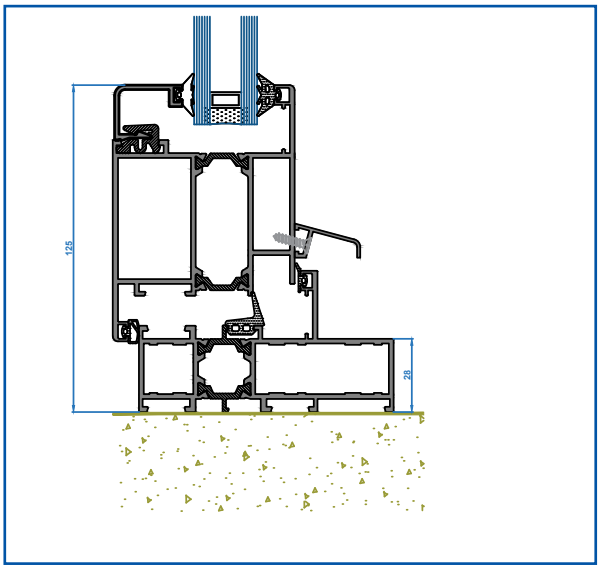

NTB-55-DOOR

Door Open In And Out Systems

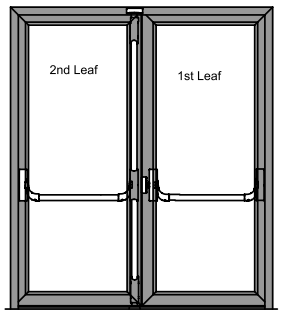

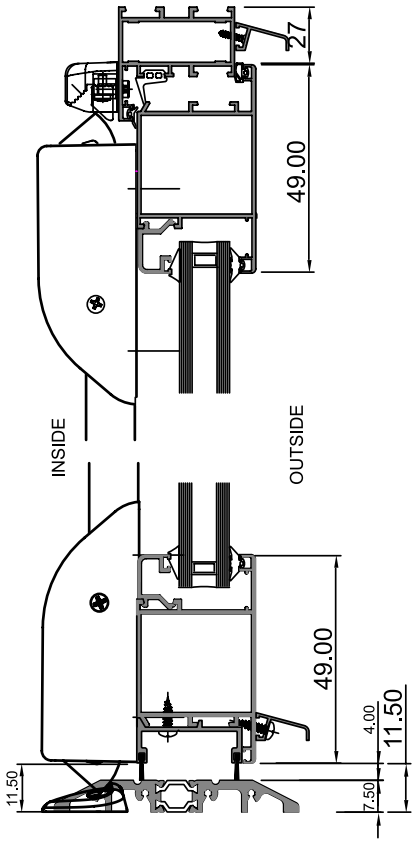

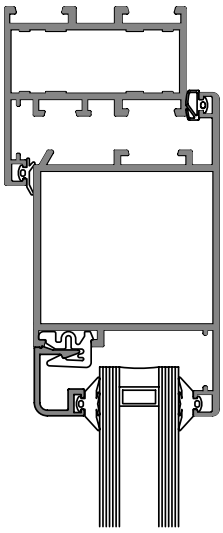

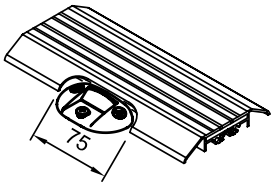

LOW THRESHOLD RAMP TO BE CUT-AWAY TO RECEIVE 8540X KEEP
(see threshold fabrication detailsfor single and double doors in section 4 of this manual)

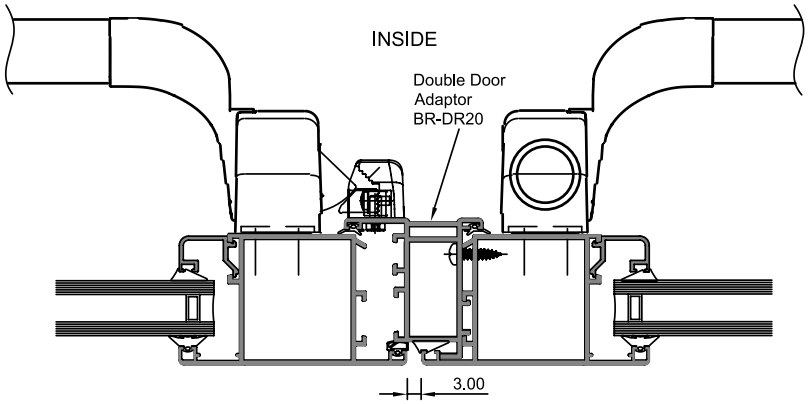

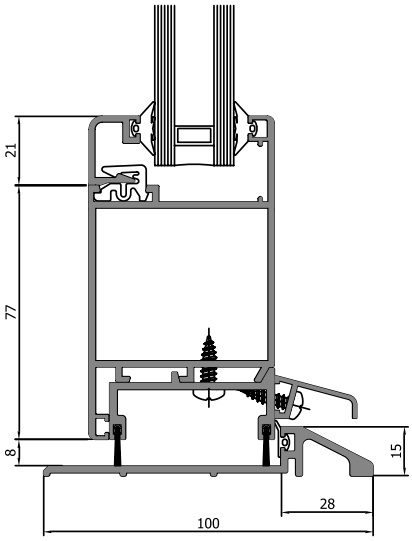

Key Features

SIZE

- Door Shutter : H2800 mm (max), W 1350 mm (max).

PERFORMANCE

- Glass infill thickness up to 39 mm.

DISCOVER MORE
ON OUR WEBSITE

TB-50 & NTB-75

BRITAL Swing Door System

TB-75- & NTB SWING DOOR

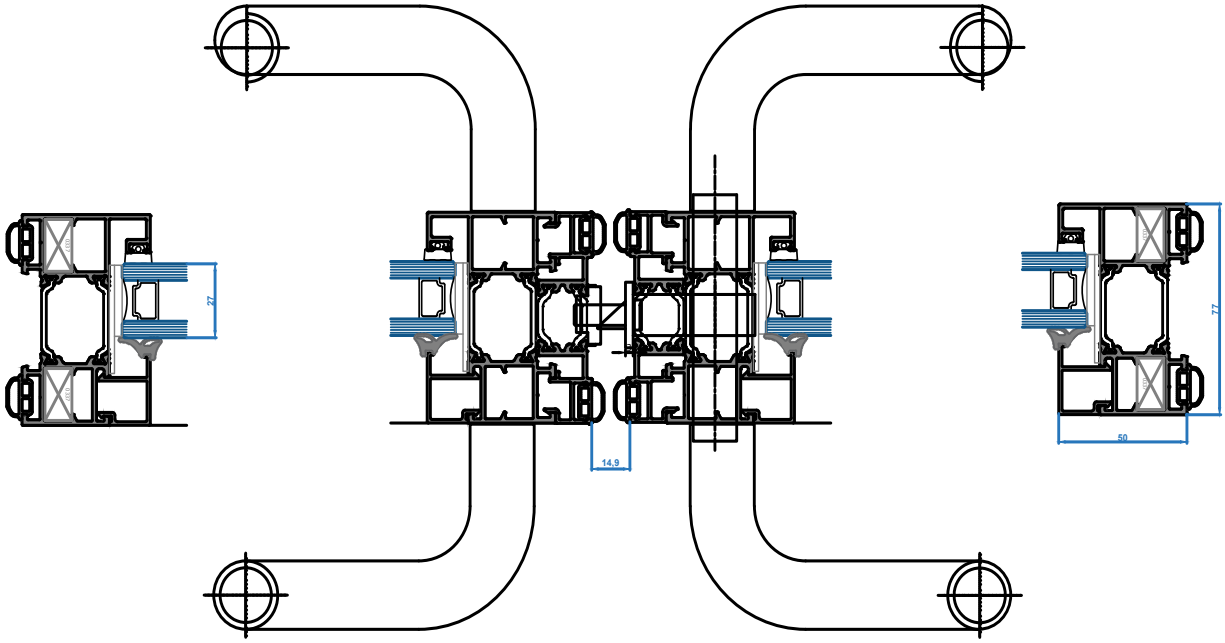

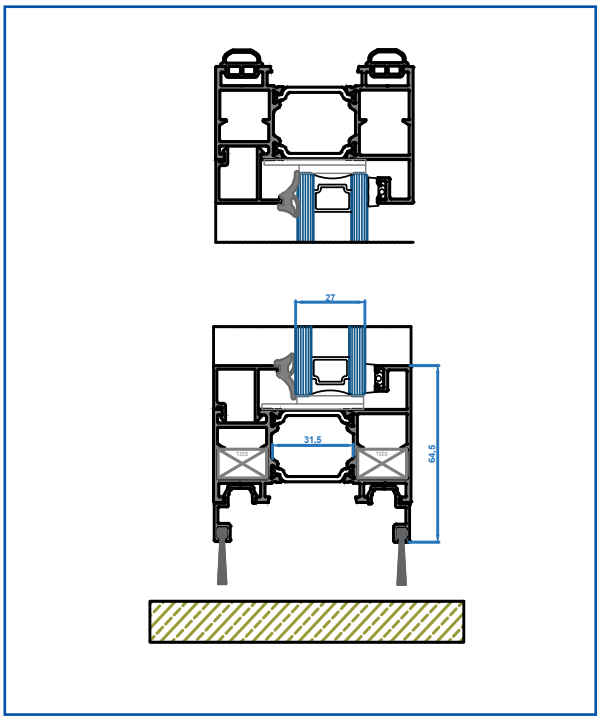

Key Features

SIZE

- Door shutter weights 90kg (max).
- Door shutter H 3000mm (max), W 1400mm (max).

PERFORMANCE

- Glass infill thickness: up to 46 mm.

DISCOVER MORE ON OUR WEBSITE

NTB-50-SWING DOOR

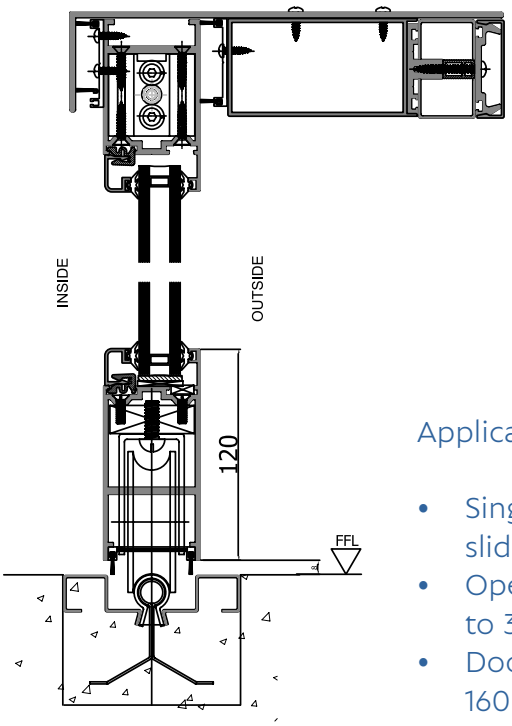

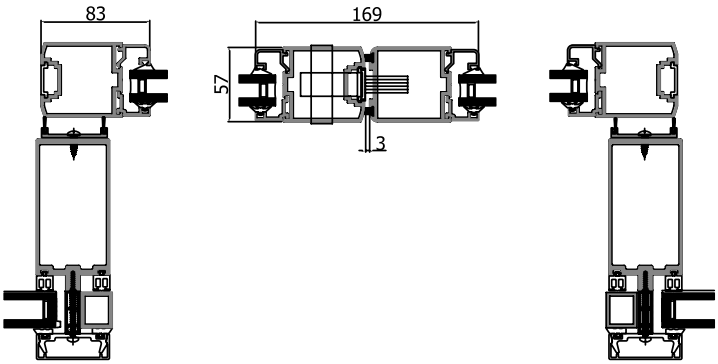

Application areas:

- Single and double leaf sliding door systems .
- Opening widths from 700 to 3000 mm possible
- Door leaf weights of up to 160 kg per leaf

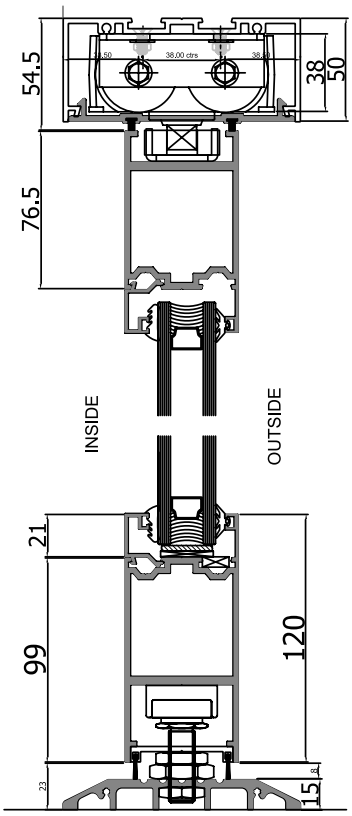

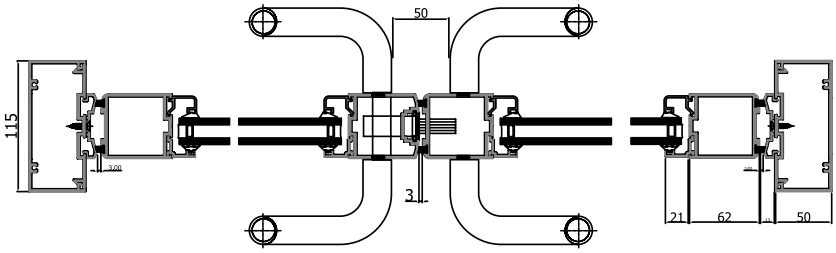

Key Features

SIZE

- Door shutter weights 90kg (max).
- Door shutter H 3000mm (max) ,W 1050mm (max).

PERFORMANCE

- Glass infill thickness: up to 32 mm.

DISCOVER MORE
ON OUR WEBSITE

TB-68, TB-82 & NTB-55

BRITAL Tilt & turn, side & bottom hung, open in

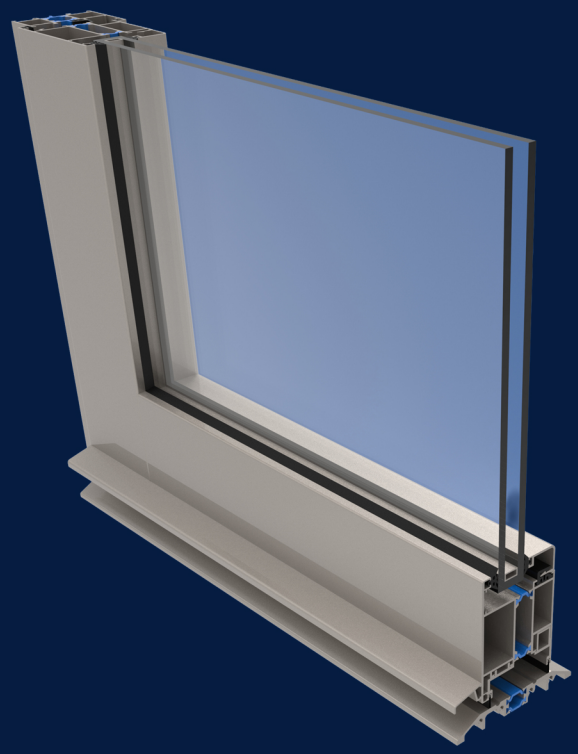

TB-68-CASE

Case Tilt & Turn Window System (Thermally Broken)

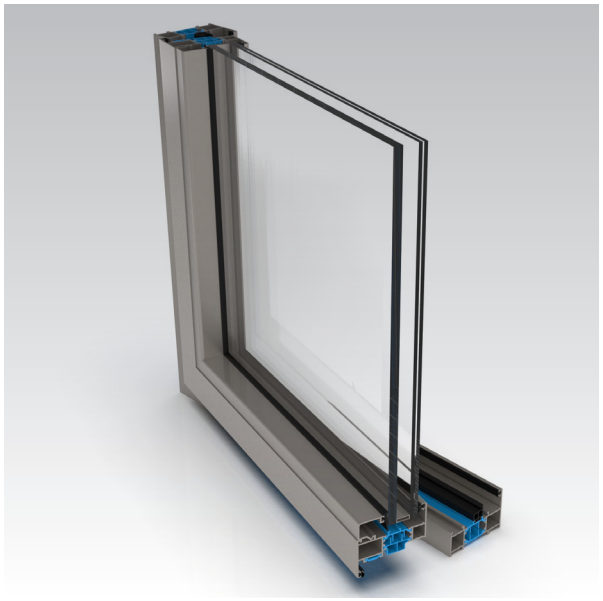

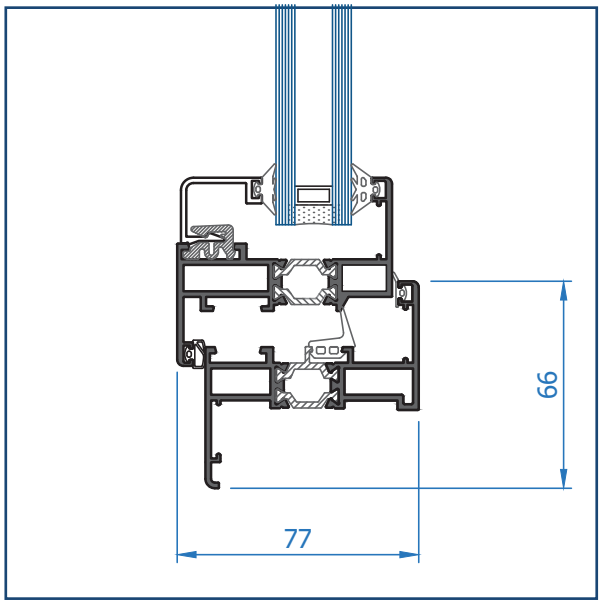

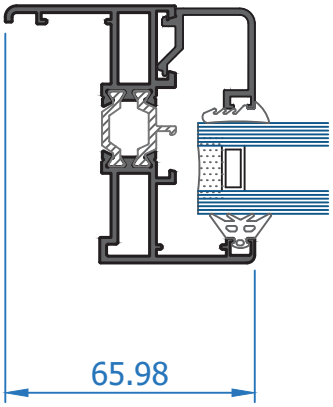

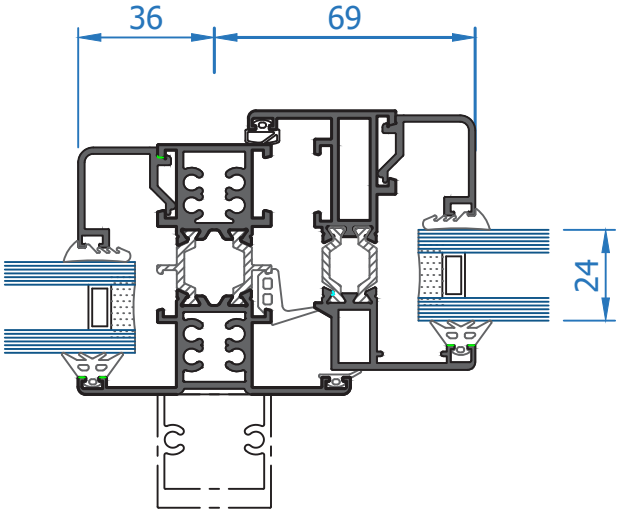

Key Features

SIZE

- Tilt& Turn & Side Hung Open In: Window shutter H 2200mm (max),W 1350mm (max)
- Bottom Hung Open In: Window shutter H 1200mm (max),W 1200mm (max)

PERFORMANCE

- Glass infill thickness up to 46 mm

DISCOVER MORE
ON OUR WEBSITE

TB-82-CASE

Case Tilt & Turn Window System (Thermally Broken)

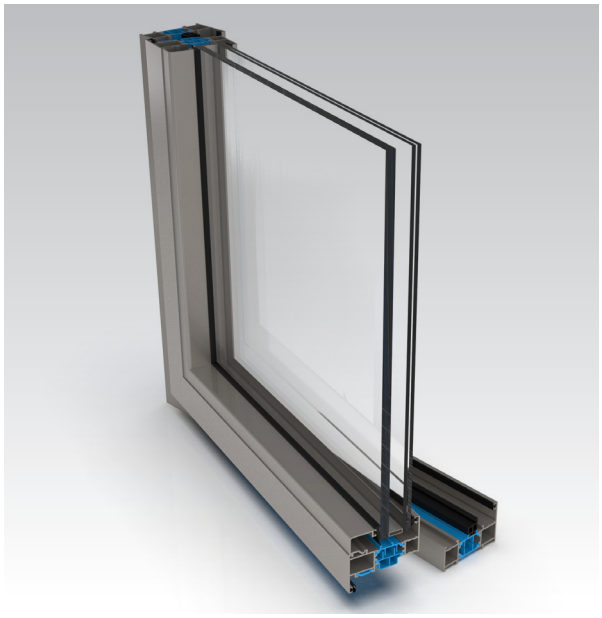

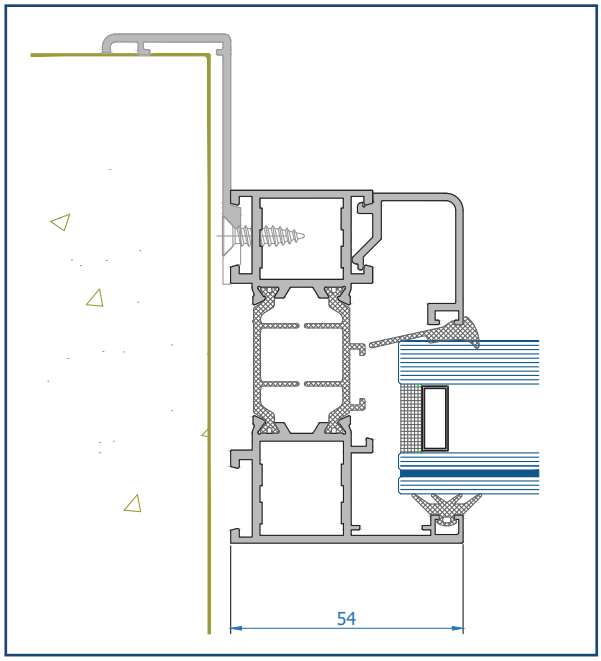

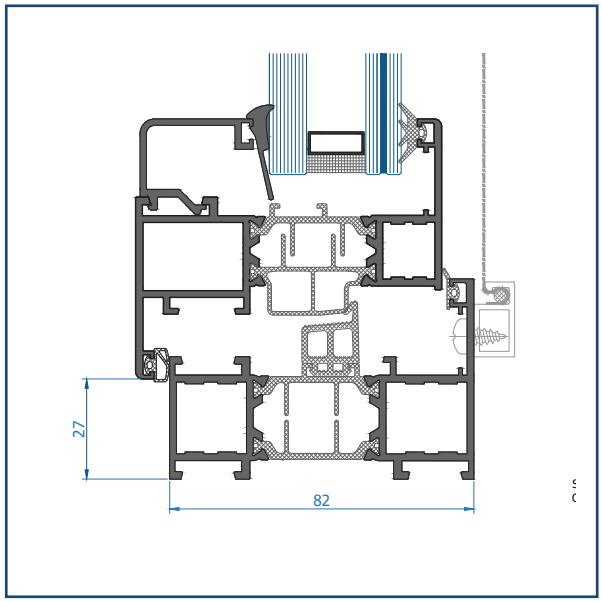

Key Features

SIZE

- Tilt& Turn & Side Hung Open In: Window shutter H 2700mm (max),W 1350mm (max)
- Bottom Hung Open In: Window shutter H 900mm (max),W 1200mm (max)

PERFORMANCE

- Glass infill thickness up to 64 mm.

DISCOVER MORE ON OUR WEBSITE

NTB-55-CASE

Case Tilt & Turn Window System

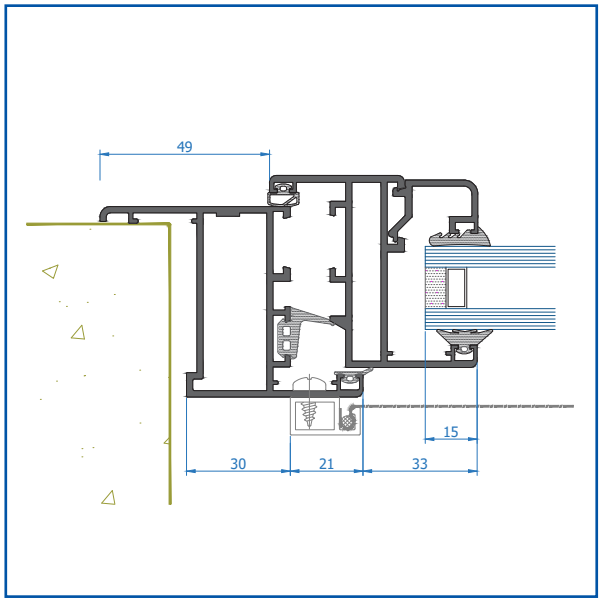

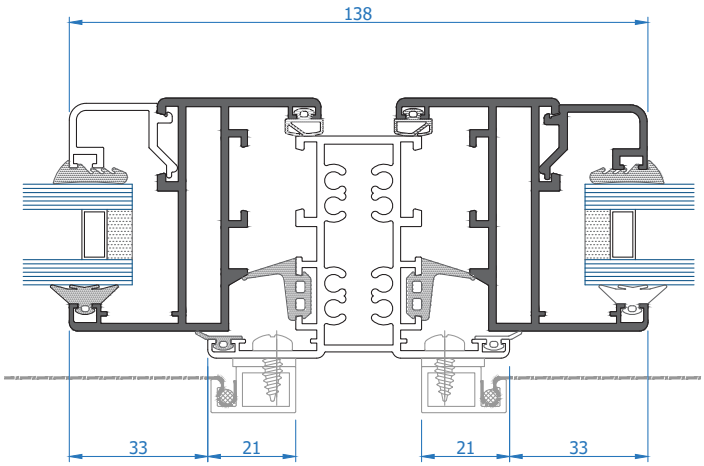

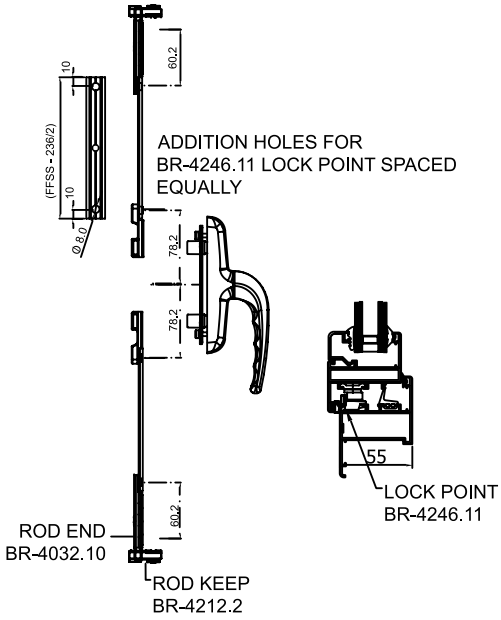

Key Features

SIZE

- Tilt& Turn & Side Hung Open In: Window shutter H 2200mm (max),W 1350mm (max).
- Bottom Hung Open In: Window shutter H 1200mm (max),W 1200mm (max).

PERFORMANCE

- Glass infill thickness up to 39 mm.

DISCOVER MORE
ON OUR WEBSITE

TB-68 & TB-76

BRITAL casement window open out

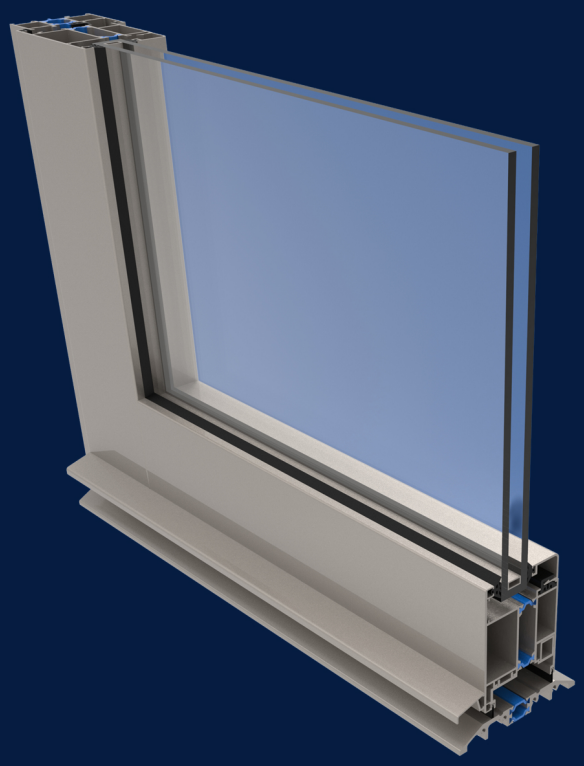

TB-75 & TB-66-OPEN OUT

Open-Out Casement Window System (Thermally Broken)

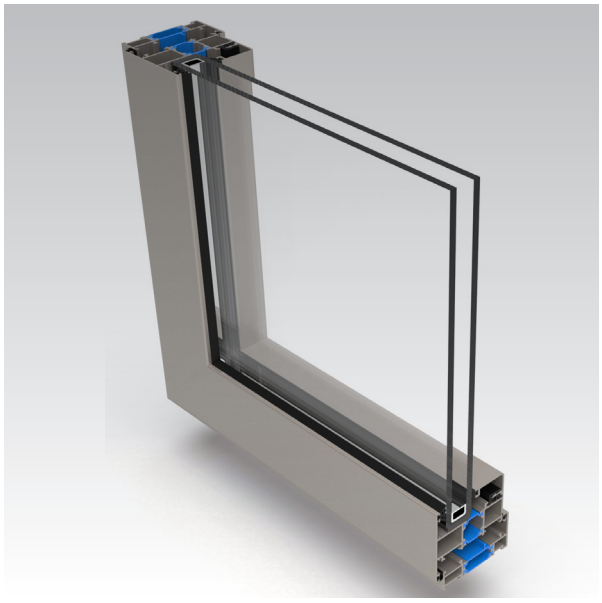

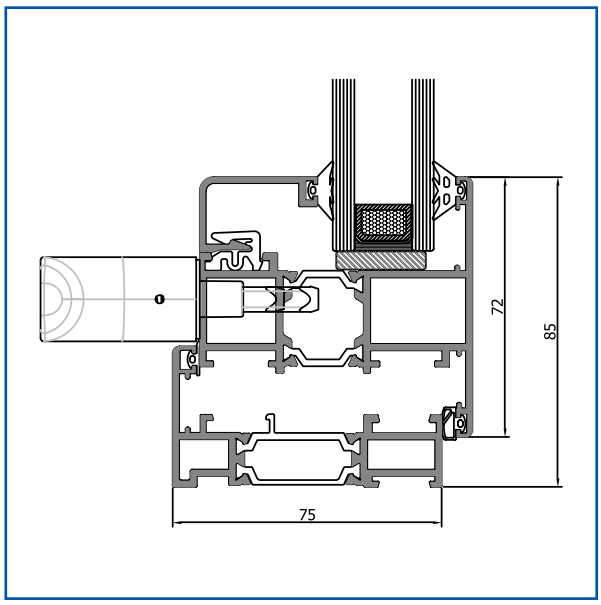

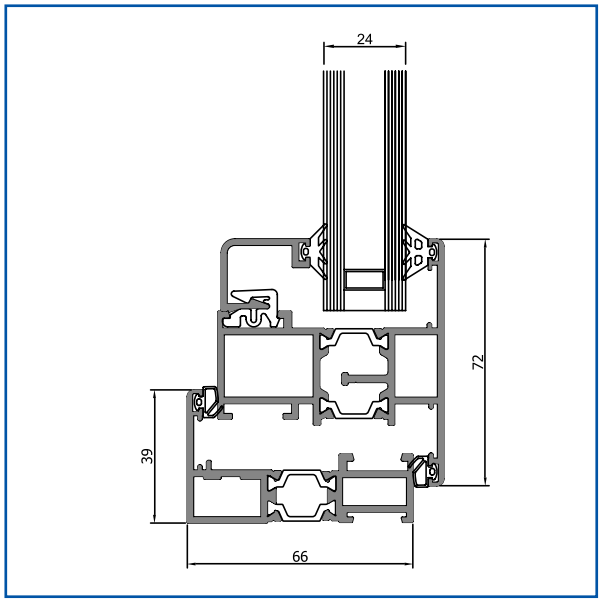

Key Features

SIZE

- Side Hung Open out: Window shutter H 2500mm (max)
- Door shutter W 1350mm (max) Sash weight up 140 kg

PERFORMANCE

- Glass infill thickness: up to 46 mm

DISCOVER MORE
ON OUR WEBSITE

TB-75 & TB-66-OPEN OUT

Open-Out Casement Window System (Thermally Broken)

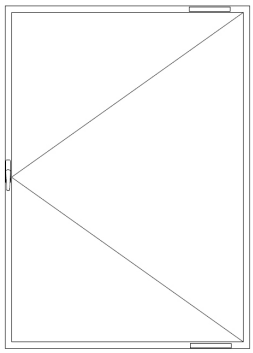

SIDE HUNG
Open out

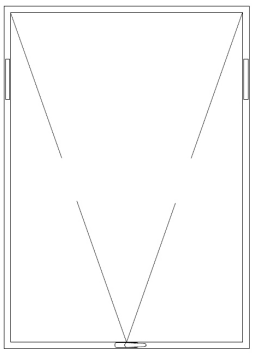

TOP HUNG

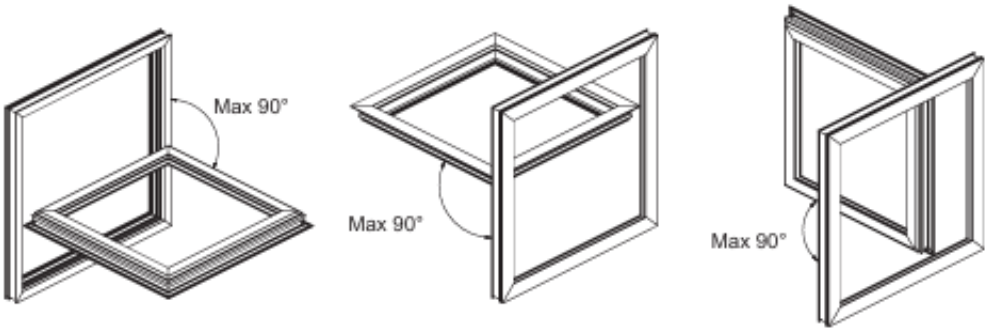

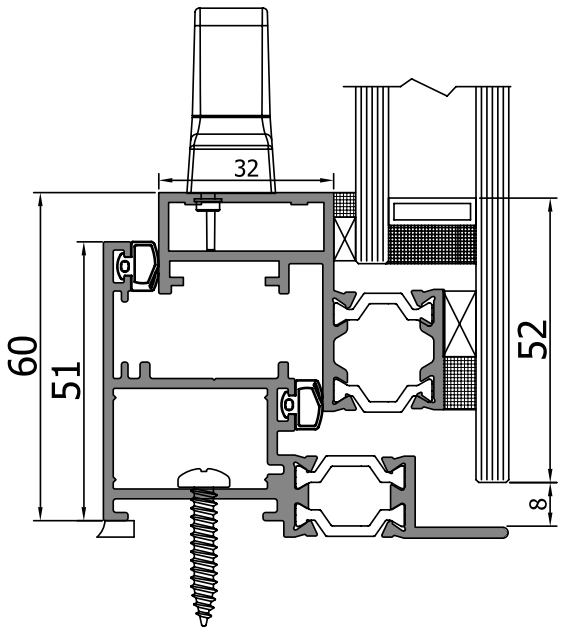

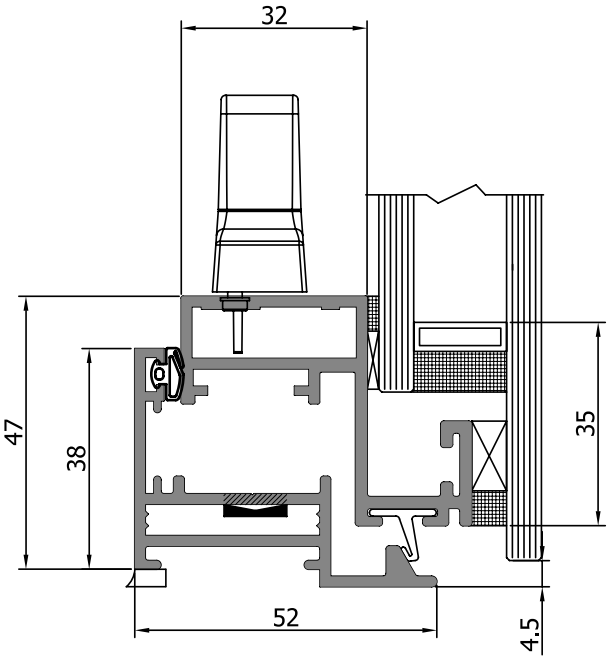

Other Systems

BRITAL System

LV-2-50

Aluminum Fixed Louver & Door System (With Insect Screen)

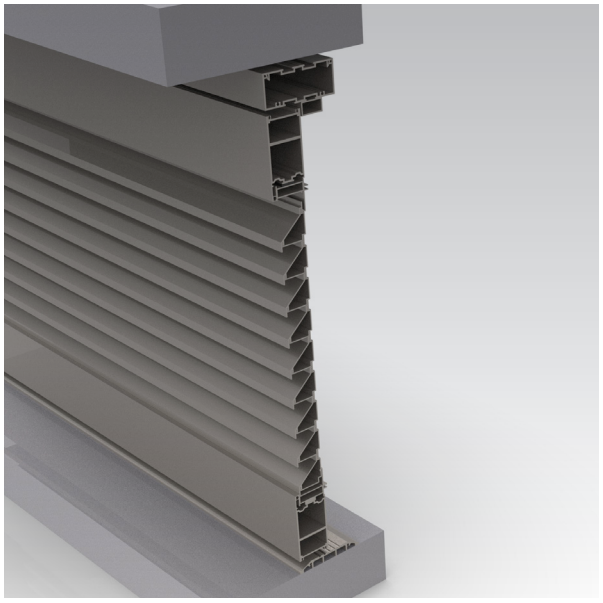

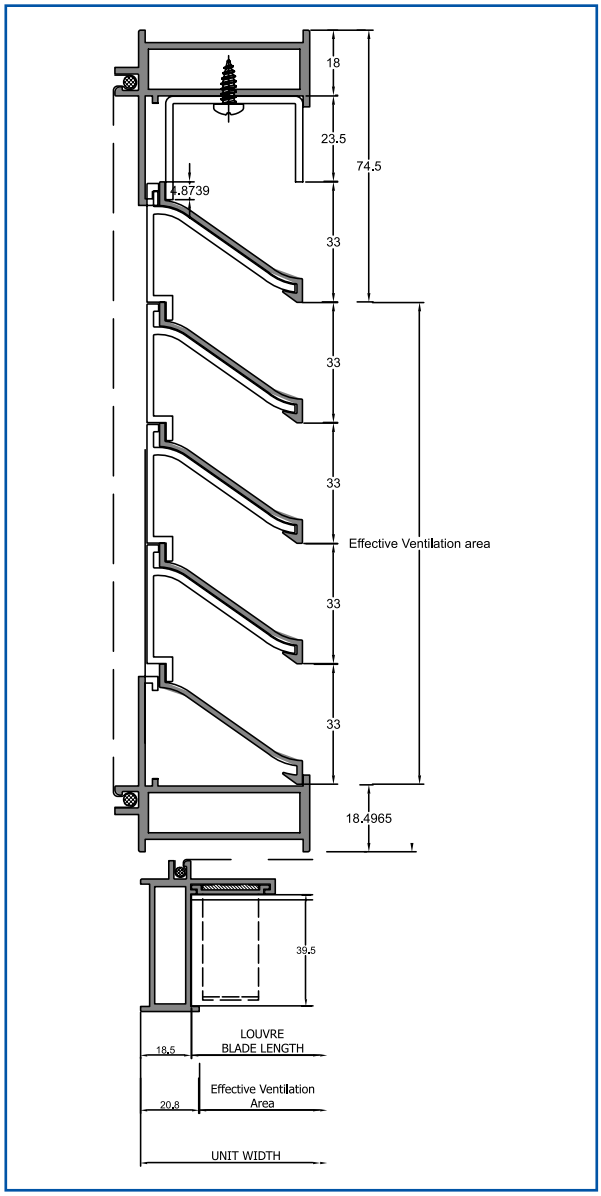

Key Features

SIZE

- Dimension:Up to H2400 mm x W1200mm.
- Designed so that the ventilation louvres can be installed directly onto the structure or incorporated into Brita I window and door sections.

PERFORMANCE

- Standard and Heavy Duty louvre blades can be used to provide numerous different ventilation performance possibilities.
- Simple and quick installation method saves time and money in fabrication.

DISCOVER MORE ON OUR WEBSITE

LV-2-50

Aluminum Fixed Louver & Door System (With Insect Screen)

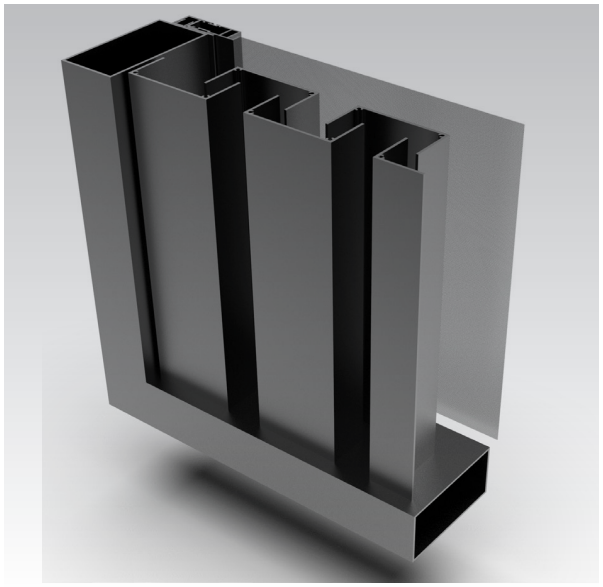

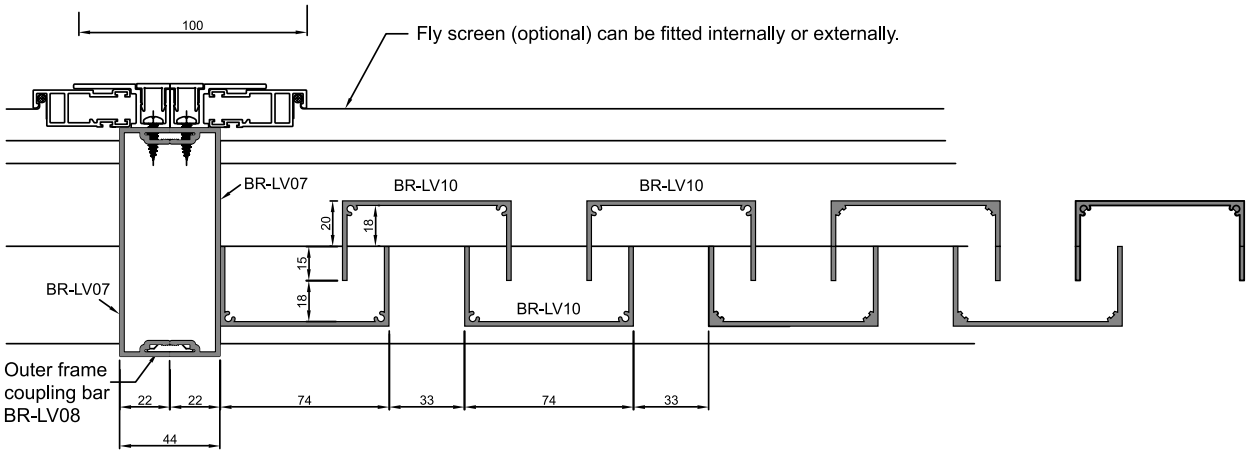

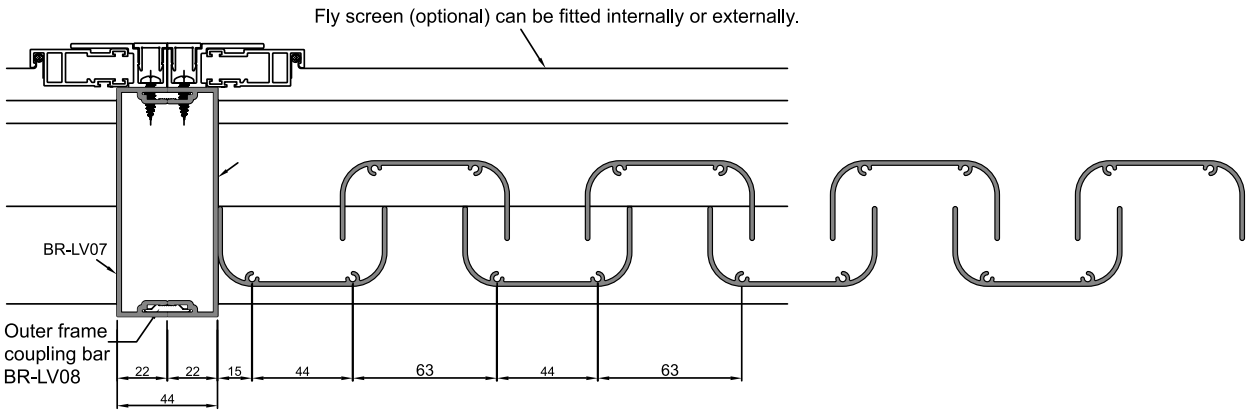

LV-2-50

DOORS SUITABLE FOR ELECTRICAL SUB-STATION

4 LEAF BI-FOLDING HINGED LOUVRE DOORS (TYPICAL DETAILS)

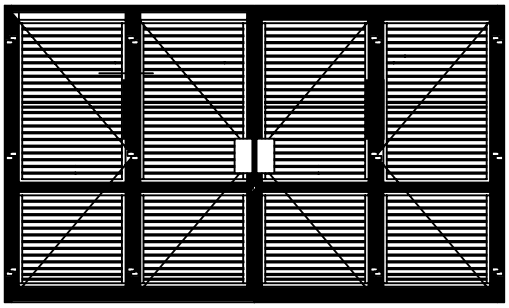

DOORS SUITABLE FOR EQUIPMENT ROOM & BIN STORES

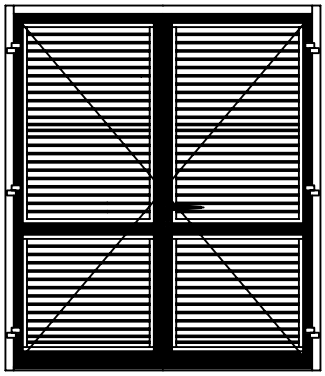

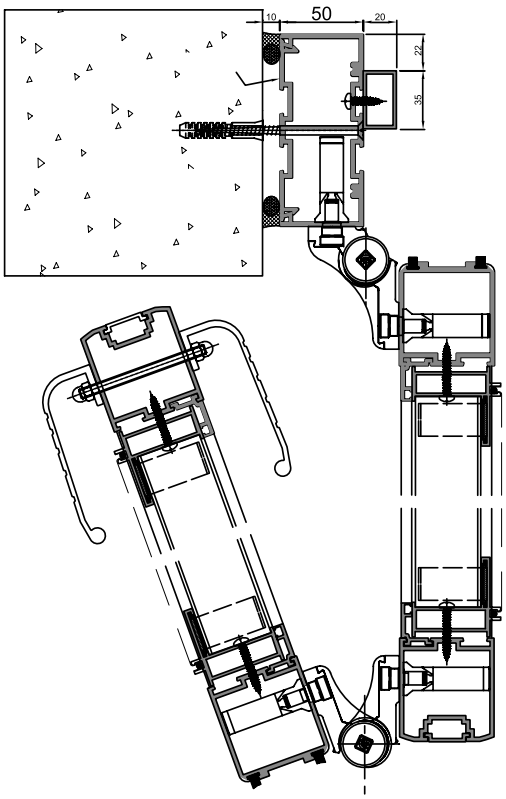

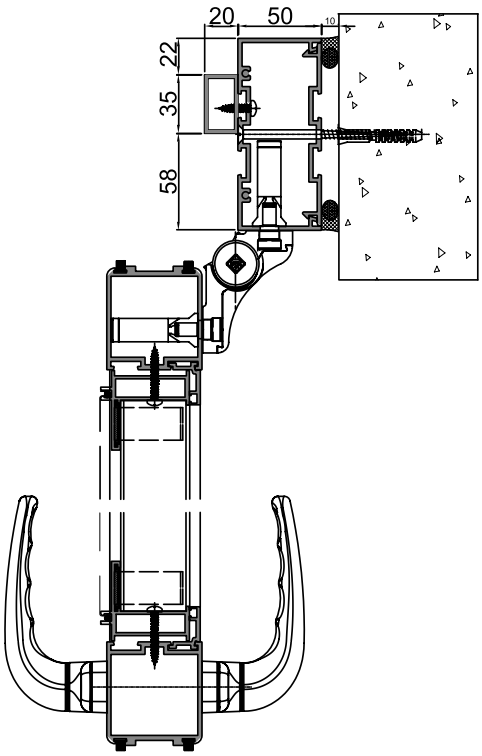

BSOL-1-56 BRISE SOLEIL SYSTEM

Aluminum Fixed Louver & Door System (With Insect Screen)

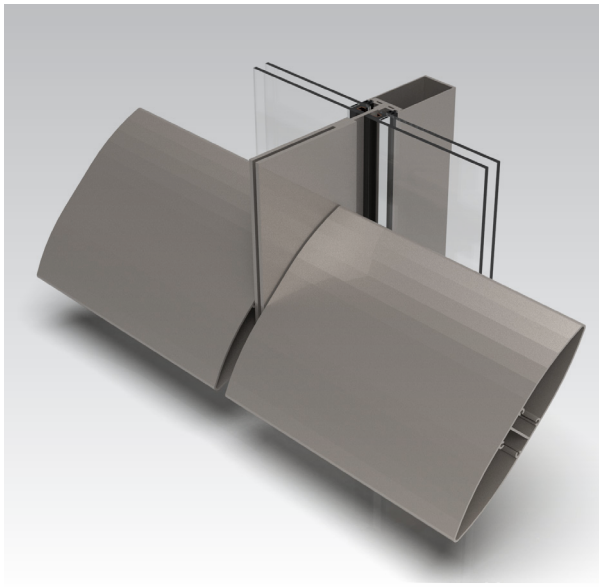

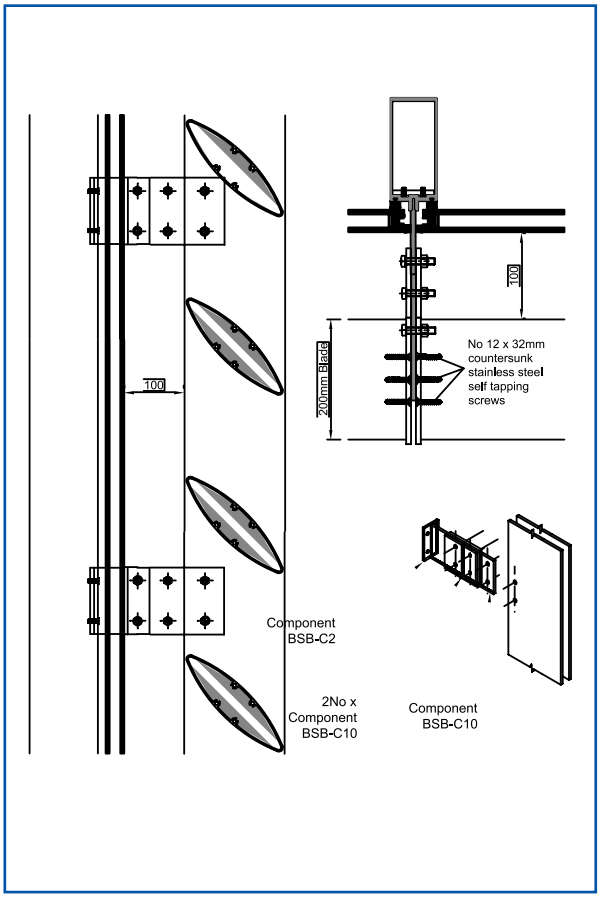

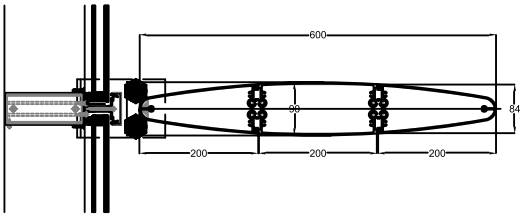

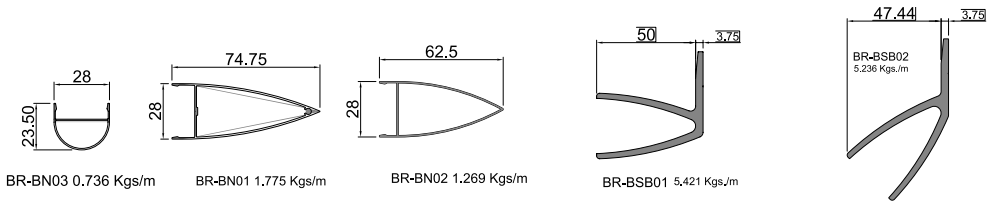

BR-BN03 0.736 Kgs/m BR-BN01 1.775 Kgs/m BR-BN02 1.269 Kgs/m BR-BSB01 5.421 Kgs./m

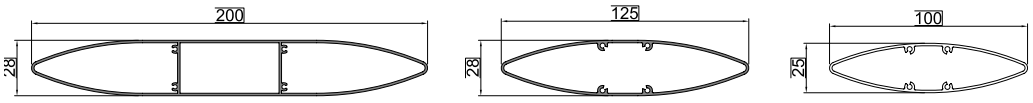

BR-BS400 6.501Kgs/m BR-BS250 3.918 Kgs/m BR-BS200 3.217 Kgs/m

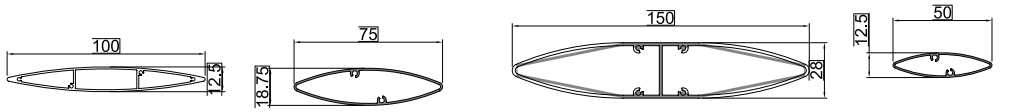

BR-BS25 2.527 Kgs/m BR-BS150 1.831 Kgs/m BR-BS300 5.776 Kgs/m BR-BS100 1.116 Kgs/m

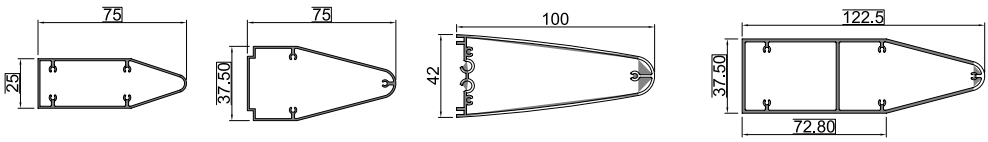

BR-BS05 2.37 kg/m BR-BS06 2.44 kg/m BR-BS14 4.109 Kgs/m BR-BS04 5.727 kg/m

SG-4-56-RG

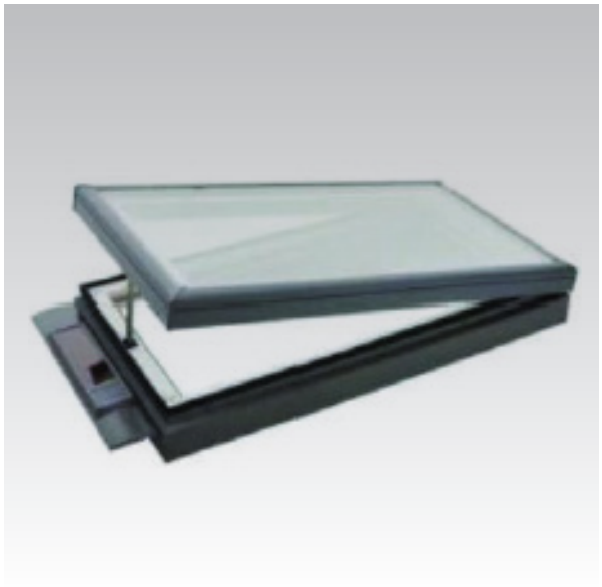

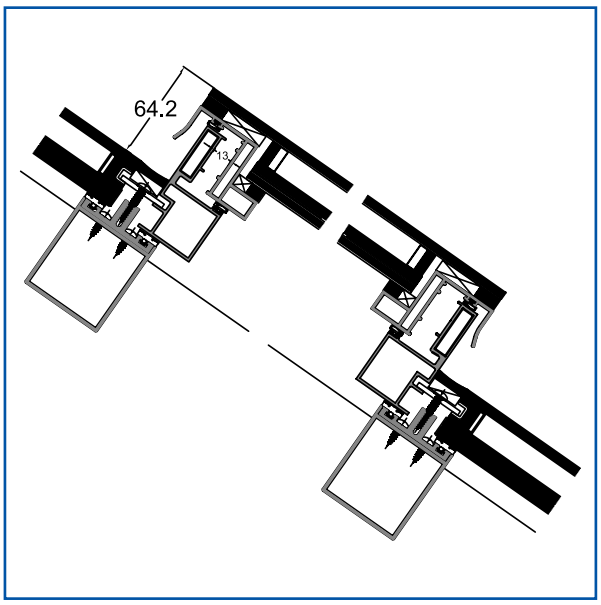

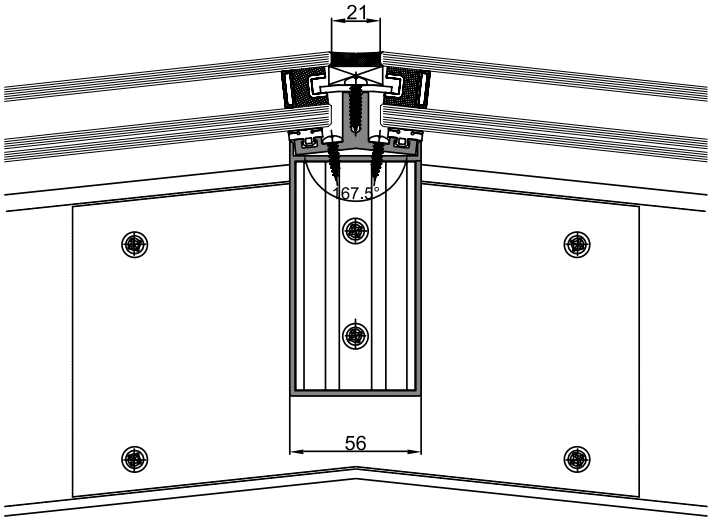

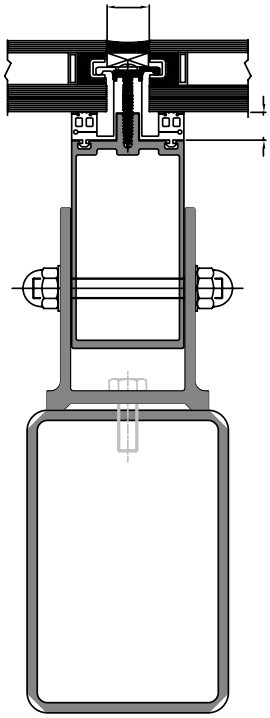

Key Features

SIZE

- Dimension: Up to H 2400 mm x W 1200mm.
- Maximum Weight up 115 KG

PERFORMANCE

DISCOVER MORE
ON OUR WEBSITE

HR-1-156

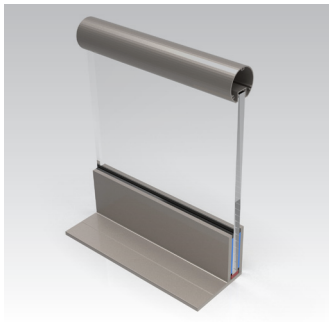

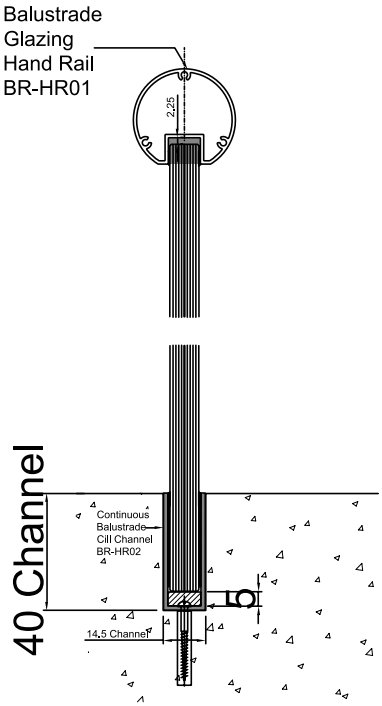

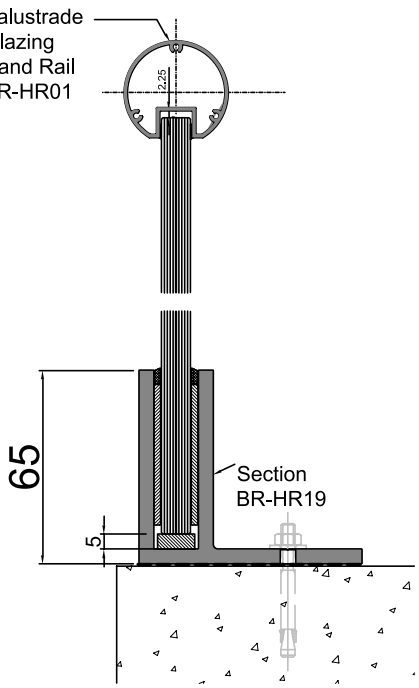

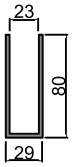

BR-HR02
1.482 Kgs/m

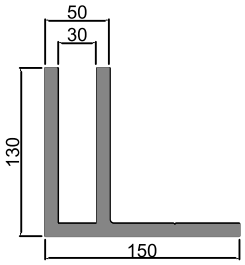

BR-HR19 10.532 Kgs/m &
Ext Perimeter = 798mm

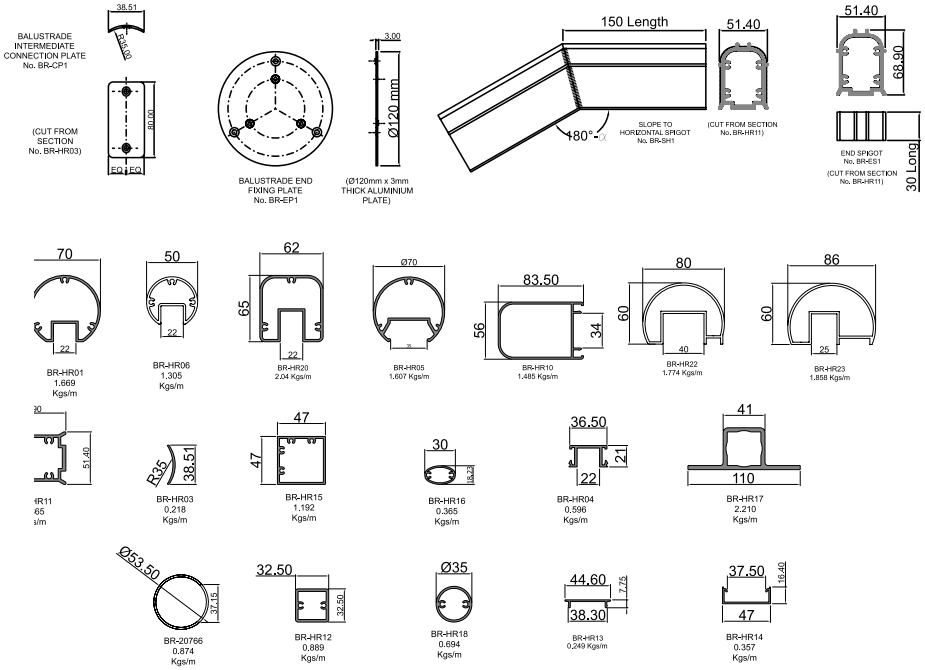

Key Features

SIZE

- Can accommodate glass panels up to 20mm in thickness Designed to resist loads in accordance with the standard BS 6180.

PERFORMANCE

DISCOVER MORE
ON OUR WEBSITE

PF-2-92

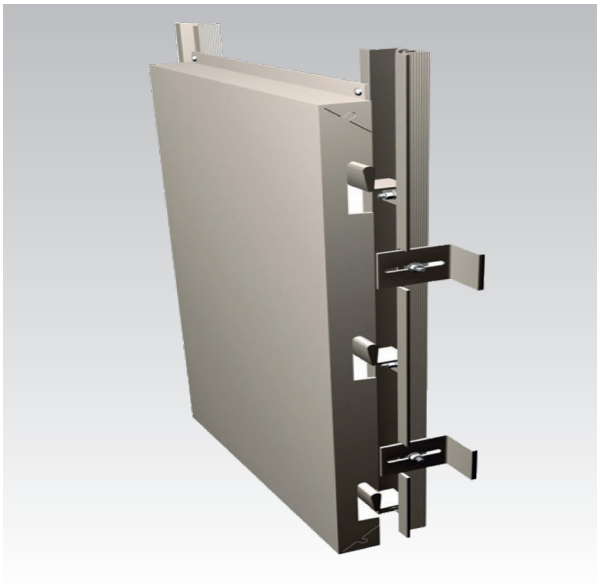

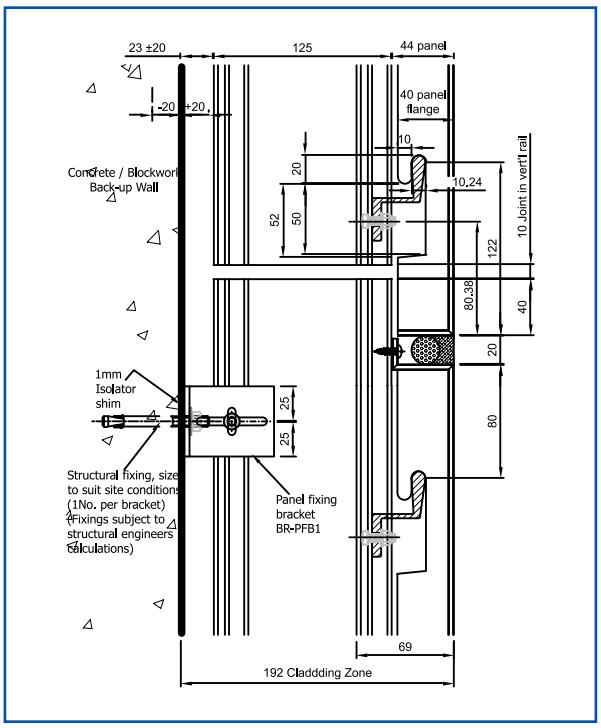
23 ±20
125
44 panel
-20
+20
40 panel flange
10
10,24
Concrete / Blockwork Back-up Wall
20
52
50
10 Joint in vert'l rail
122
80,38
40
20
1mm Isolator shim
25
25
80
Structural fixing, size to suit site conditions (1No. per bracket) (Fixings subject to structural engineers calculations)
Panel fixing bracket BR-PFB1
69
192 Claddding Zone

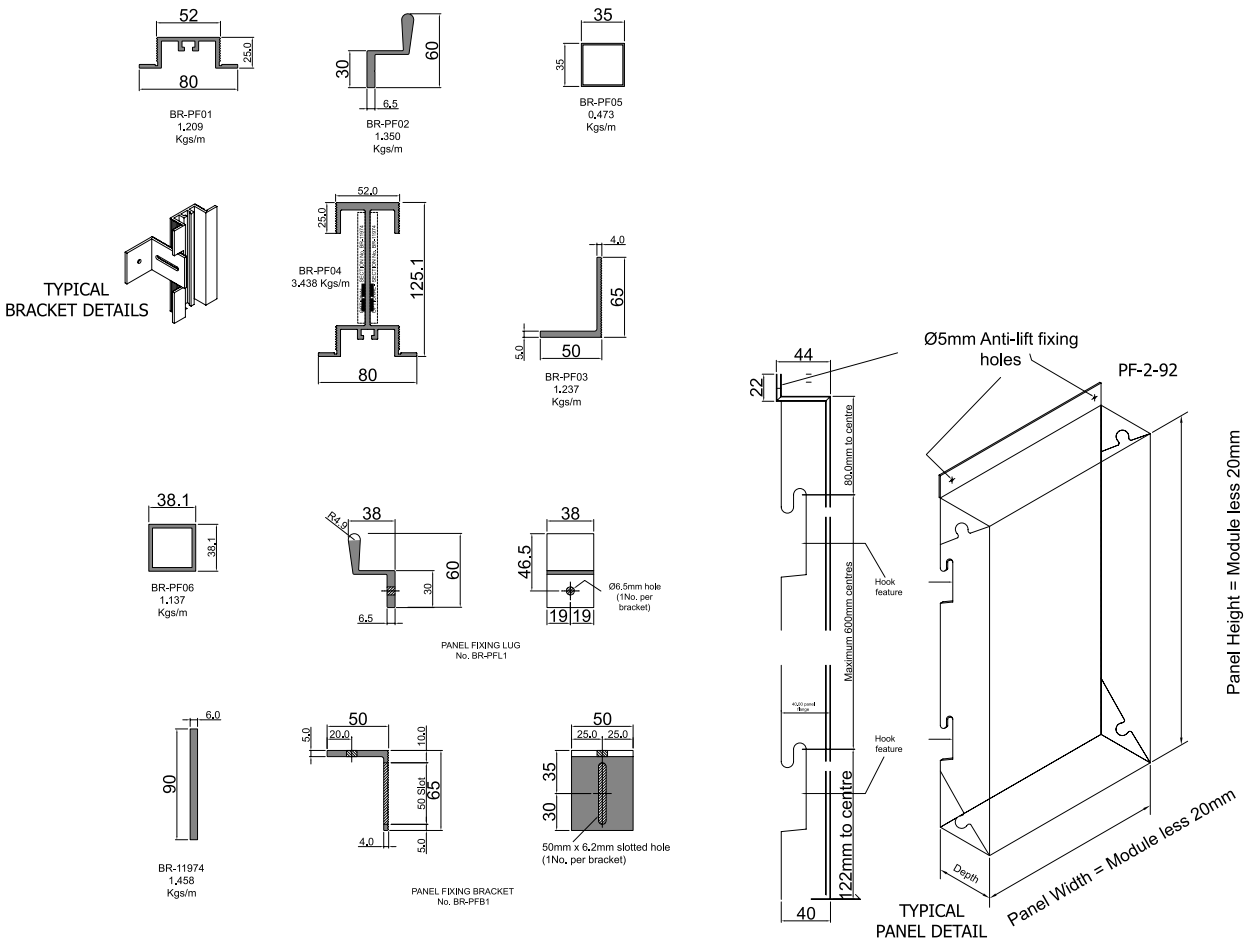
52
25,0
80
BR-PF01
1,209
Kgs/m
30
60
6,5
BR-PF02
1,350
Kgs/m
35
35
BR-PF05
0,473
Kgs/m
TYPICAL BRACKET DETAILS
52,0
25,0
BR-PF04
3,438 Kgs/m
125,1
80
4,0
65
5,0
50
BR-PF03
1,237
Kgs/m
38,1
38,1
BR-PF06
1,137
Kgs/m
R4,0
38
60
30
6,5
38
46,5
Ø6,5mm hole (1No. per bracket)
19 19
PANEL FIXING LUG
No. BR-PFL1
6,0
90
BR-11974
1,458
Kgs/m
50
5,0
20,0
10,0
50 Slot
65
4,0
5,0
PANEL FIXING BRACKET
No. BR-PFB1
50
25,0 25,0
35
30
50mm x 6,2mm slotted hole (1No. per bracket)
44
22
Ø5mm Anti-lift fixing holes
PF-2-92
80,0mm to centre
Hook feature
Maximum 600mm centres
Hook feature
122mm to centre
40
Depth
TYPICAL PANEL DETAIL
Panel Width = Module less 20mm
Panel Height = Module less 20mm

MASTER®

HARDWARE FOR WINDOWS AND DOORS

Hardware for Windows and Doors

BRITAL Accessoires

KARMA

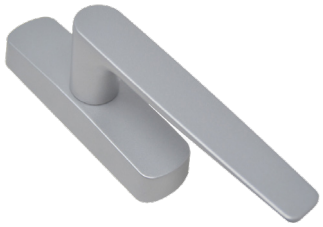

Cremone bolt
Art: 6060

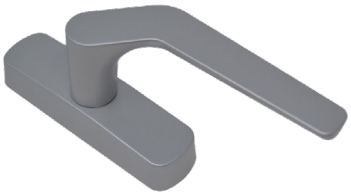

Cremone bolt
Art : 6064.1D

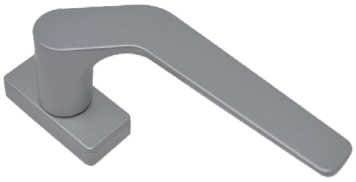

Offset handle
Art: 3102.D

COMFORT

Cremone bolt
Art: 6030.10

Cremone bolt with
removable handle
Art : 6003.4

Cremone bolt
Art: 3076.1S

ITALIA

Cremone bolt
Art: 6008

Cremone bolt
Art : 6007.1S

Offset handle
Art : 3078.1S

EMPIRE

Friction stay hinges for curtain wall

Art	Description	Height Sash (mm)	Width Sash (mm)
1206.10	Length **10" / 261 mm**	450 | 600	1200
1206.10	Length **12" / 311 mm**	600 | 800	1200
1206.14	Length **14" / 350 mm**	800 | 1000	1200
1206.16	Length **16" / 411 mm**	1000 | 1200	1200
1206.18	Length **18" / 460 mm**	1200 | 1400	1500
1206.20	Length **20" / 510 mm**	1400 | 1600	1600
1206.22	Length **22" / 556 mm**	1600 | 1800	1800
1206.24	Length **24" / 600 mm**	1600 | 1800	1800
1206.28	Length **28" / 713 mm**	1800 | 2000	2000

KARMA

Pull handle
Art: 3081

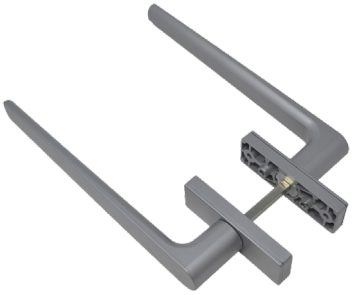

Pull handle
Art: 3081.10

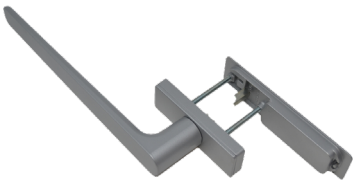

Pull handle
Art: 3081.11

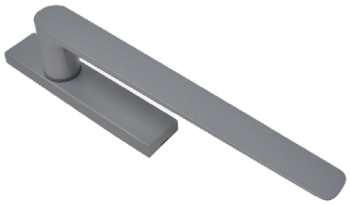

Pull handle
Art: 3081.21

Pull handle
Art: 3081.35

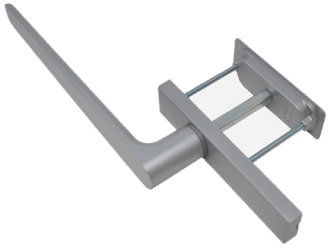

Pull handle
Art: 3081.20

KARMA

Pull handle
Art: 3080

Pull handle
Art: 3080.11

Pull handle
Art: 3080.10

Pull handle
Art: 3080.21

Pull handle
Art: 3080.25

Pull handle
Art: 3080.20

ROLLER

Roller kit - 200kg/sash
Art: 6711

Roller kit - 200kg/sash
Art: 6711.1

Roller set connecting
Art: 6720.5

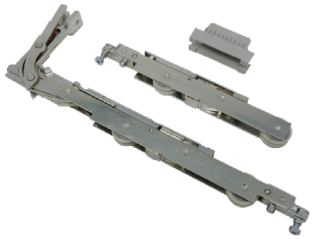

Roller kit 250kg/Sash
Art: 6740.2

Additional rollers 400kg
Art: 6740.12

Lock shock absorber
Art: 6737.2/3

CREMONE

Cremone bolt kit
with retractable hooks

Art	Description	Height Sash (mm)	Width Sash (mm)
6732/3.13	Cremone kit 2Hook	735 | 1305	1305
6732/3.19	Cremone kit 2Hook	1235 | 1960	1900
6732/3.25	Cremone kit 2Hook	1835 | 2560	2500
6732/3.28	Cremone kit 3Hook	2270 | 2860	2800
6732/3.33	Cremone kit 3Hook	2670 | 3360	2800
6732/3.38	Cremone kit 3Hook	3670 | 3860	3800

KARMA

Double reduced handle
Art: 3067

Double handle minimal
Art : 3051.1A

Art: 3052

COMFORT

Two-side handle
Art: 3060

Knob
Art: 3064.1

Knob
Art: 3064.6

Others

Two-side handle
Art: 3065

Stainless Steel Handle
Art: 3062.10

Two-side nylon handle
Art: 3134

DINAMIKA

Door hinge
Art: 8010

Door hinge
Art: 8010.11

Door hinge
Art: 8011.50

SLIM RAPID

Door hinge
Art: 8060

Door hinge with slip-on plate
Art: 8060.6

CILINDRIKA

Fast mounting barrel
hinge for doors
Art: 8072

Fast mounting barrel
hinge for doors
Art : 8072.6

KARMA

Handle
Art: 3100

Handle
Art : 3102.D

Reduced handle
Art: 3106.30

ITALIA

Handle
Art: 3072.11

Handle
Art: 3072

Handle
Art: 3077.2

COMFORT

Handle
Art: 3070

Cremone bolt
Art : 6004

Others

Fast Lock
Art: 6374E

Counterplate kit
Art : 6720.3

PROJECT REFERENCES

CREEKSIDE Plot 18 A

DUBAI CREEK HARBOUR DEVELOPMENT
Developer : EMMAR & DUBAI HOLDING
Consultant: ATKINS Realis

DISTINCTION TOWER

Developer : DAMAC
Consultant : LACASA

PARAMOUNT TOWERS

Developer : DAMAC
Consultant: LACASA

PRIVE BY DAMAC

Developer : DAMAC
Consultant : LACASA

AL HIKMA TOWER

Developer : Sheikh Issa Bin Zayed Al Nahyan's holding
Consultant: ARAB Expert Engineer

HSBC MIDDLE EAST HQ

BUSINESS BAY, DUBAI, UAE
Developer : HSBC
Consultant : CONIN

DAMAC EXECUTIVE BAY

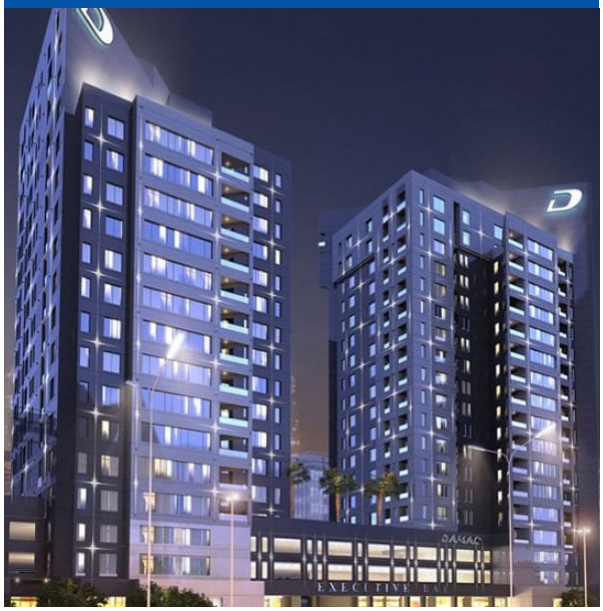

Consultant: Engineering Consortiuma Dubai, UAE

THE VOGUE COSMOPOLITAN

BUSINESS BAY, DUBAI, UAE
Developer : DAMAC
Consultant : LACASA

ROTANA HOTEL

SUFOUH, DUBAI, UAE
Developer : ROTANA
Consultant: SHADID Engineering Consulting

DISTINCTION TOWER

Consultant : Al Burj Engineering Dubai, UAE

MARINA DIAMOND

DUBAI MARINA, UAE
Consultant : Al Ajmi Engineering

EMIRATES DEVELOPMENT BANK

Consultant: DAR Garhoud, Dubai, UAE

HILTON LUXURY FIVE-STAR RESPORT HOTEL

Consultant: Arenco Architectural & Engineering Consultants Dubai, UAE

LAPITA HOTEL

Consultant: Dewan Architects Dubai Parks and Resorts by MARRIOTT, UAE

SHARJAH AQUARIUM

Consultant: Cansultant Engineering Al Khan Heritage, Sharjah, UAE

SAHARA TOWER NORTH

Consultant: Consultant: Horizon International
Sharjah, UAE

UNITED SQUARE KHALIDIYA

Consultant: EHAF Architects & Engineers
Abu Dhabi, UAE

EXECUTIVE VILLAS AT ACACIA GARDENS

Consultant: Cansultant Engineering Al Khan Heritage, Sharjah, UAE

RUSSIAN SCHOOL

Consultant: Makan Consulting Engineersa Abu Dhabi, UAE

AUGUST MEDICAL

Consultant: STH Society Technology Abu Dhabi, UAE

ZAMIL HOUSE

Consultant : Architecture Arabian Al Khobar, KSA

AL KHOBAR GATE TOWER

Consultant : Aecom Al Khobar, KSA

THE AVENUES SHOPPING MALL PHASE III, KUWAIT CITY

Consultant: Dewan Architects Dubai Parks and Resorts by MARRIOTT, UAE

MADINAH AIRPORT HOTEL

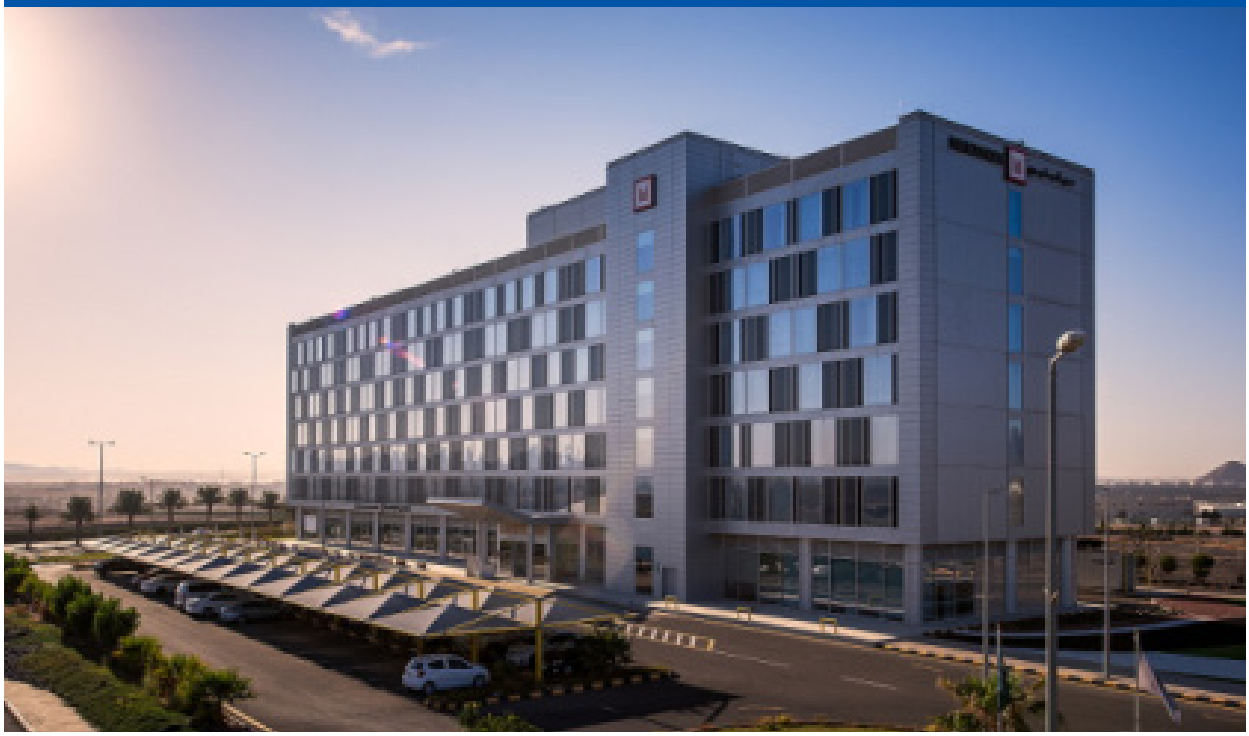

Consultant: GMW Architects International Madinah, KSA

HUAWEI Office

Consultant: Arif & Bintoak Consulting Architects & Engineers.

The Grand

Consultant: ATK Engineering Consultant

Knowledge Oasis Muscat

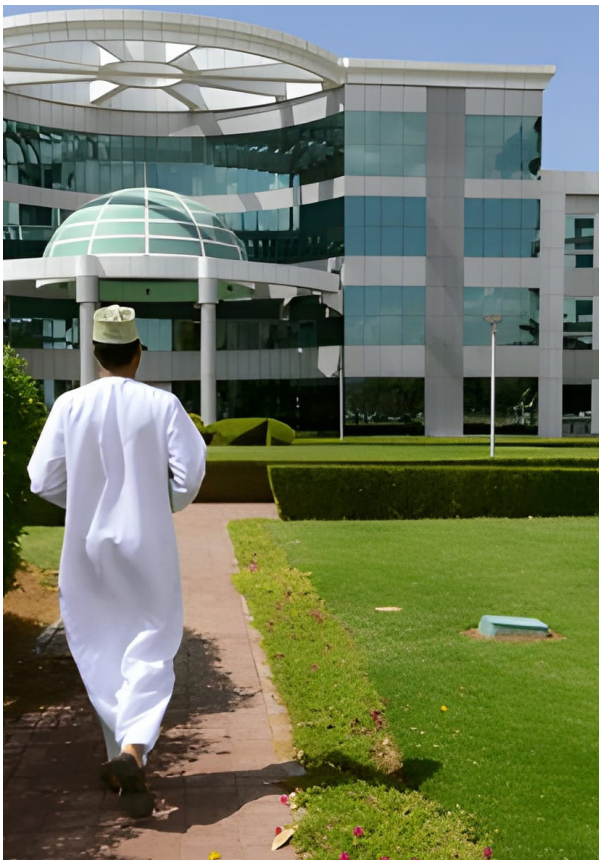

Consultant: F&M Middle East Engineering Consultancy

Office MASTERCARD

Consultant: Dewan Architects & Engineers.w

IMAGINE IT, AND WE BRING YOUR DREAMS TO LIFE

BRITAL

ALUMINIUM SYSTEMS DESIGN

BRITAL MIDDLE EAST ALUMINIUM SYSTEMS L.L.C
Al Quoz Ind. Area 1
Dubai UAE
info@brital.com